"APPROVED FOR RELEASE: Thursday, September 26, 2002 CIA-RDP86-00513R002065710007-3
APPROVED FOR RELEASE: Thursday, September 26, 2002 CIA-RDP86-00513R002065710007-3"

MIKHAYLOV, A.A., otv.red.; ZVEREV, M.S., red.; KULIKOVSKIY, P.G., red.; MASEVICH, A.G., red.; MUSTEL', E.R., red.; SOBOLEV, V.V., red.; SUBBOTIN, M.F., red.; SAMSONENKO, L.V., red.; TUMARKINA, N.A., tekhn.red.

[Astronomy in the U.S.S.R. during forty years 1917-1957; collected articles] Astronomiia v SSSR za sorok let, 1917-1957; sbornik statei. Red.kollegiia: A.A.Mikhailov i dr. Moskva, Gos.izd-vo fiziko-matem.lit-ry, 1960. 728 p.

(MIRA 13:7)

(Astronomy--History)

"APPROVED FOR RELEASE: Thursday, September 26, 2002 CIA-RDP86-00513R002065710007-3
APPROVED FOR RELEASE: Thursday, September 26, 2002 CIA-RDP86-00513R002065710007-3"

1. ZVEREV, N. I. : KRESTOV, B.D. ; ENG.

2. USSR (600)

4. Ash Disposal

7. Apparatus VTI for washing out ashes. Rab. energ. 2 no. 10, 1952

9. Monthly List of Russian Accessions, Library of Congress, January 1953. Unclassified.

"APPROVED FOR RELEASE: Thursday, September 26, 2002 CIA-RDP86-00513R002065710007-3
APPROVED FOR RELEASE: Thursday, September 26, 2002 CIA-RDP86-00513R002065710007-3"

1. ZVEREV, N. I.

2. USSR (600)

4. Dust - Removal

7. Dust collector model VTI. Elek. sta. 23 No. 2, 1953.

9. **Monthly List of Russian Accessions**, Library of Congress, June 1953. Unclassified.

APPROVED FOR RELEASE: Thursday, September 26, 2002 CIA-RDP86-00513R002065710007-3
APPROVED FOR RELEASE: Thursday, September 26, 2002 CIA-RDP86-00513R002065710007-3"

ZVEREV, N.I. kandidat tekhnicheskikh nauk

Calculation of the suction flue of baffle-type fly-ash collectors. Teploenergetika 2 no.5:44-49 My '55. (MIRA 8:9)

1. Vsesoyuznyy teplotekhnicheskiy institut
(Dust collectors)

APPROVED FOR RELEASE: Thursday, September 26, 2002 CIA-RDP86-00513R002065710007-3
APPROVED FOR RELEASE: Thursday, September 26, 2002 CIA-RDP86-00513R002065710007-3"

ZVEREV, N. I.

AID P - 2328

Subject : USSR/Electricity

Card 1/1 Pub. 110-a - 9/17

Author : Zverev, N. I., Kand. of Tech. Sci.

Title : Computing the outlet pipe of a screen-type ash catcher

Periodical : Teploenergetika, 5, 44-49, My 1955

Abstract : A mathematical analysis for designing a screen-type ash catcher equipped with an ejector is presented with tables, curves and equations. Five diagrams.

Institution : All-Union Heat Technology Institute

Submitted : No date

APPROVED FOR RELEASE: Thursday, September 26, 2002 CIA-RDP86-00513R002065710007-3
APPROVED FOR RELEASE: Thursday, September 26, 2002 CIA-RDP86-00513R002065710007-3"

AUTHOR: Zverev, N.I., Candidate of Technical Sciences.

TITLE: Modelling the motion of poly-disperse dusts. 96-7-7/25
(Modelirovaniye dvizheniya polidispersnoy pyli.)

PERIODICAL: "Teploenergetika" (Thermal Power), 1957, Vol.4, No.7, pp. 35 - 38 (U.S.S.R.)

ABSTRACT: In a previous article the author showed that there are five criteria that characterise the steady motion of dusty gas or liquid. Two of these criteria include the diameter of a dust particle. Consequently these criteria are only applicable to mono-disperse dusts (that is dust consisting of particles of one size only). In practice we have to deal almost exclusively with poly-disperse dusts, that is dusts consisting of particles of many sizes. At low dust concentrations when the motions of different fractions do not interact on one another modelling may be effected by sub-dividing the poly-disperse dust into a number of narrow fractions and using corresponding fractions in the model. However, this procedure is very laborious and is quite inapplicable at high concentrations. Neither is it permissible to introduce some sort of mean

Card 1/4

APPROVED FOR RELEASE: Thursday, September 26, 2002 CIA-RDP86-00513R002065710007-3
APPROVED FOR RELEASE: Thursday, September 26, 2002 CIA-RDP86-00513R002065710007-3"

diameter into the criteria since in order to choose the diameter correctly it is necessary to know in advance the function that it is required to find.

All this severely limits the possibilities of modelling for the study of industrial equipment and, therefore, it is necessary to find additional conditions of similarity of motion of poly-disperse dusts.

The similarity of motion of two dust flows is then considered. During the course of the examination the dimensions of the dust particles are expressed as a ratio of a dimension which is characteristic for the given dust so that the diameter of the particle is expressed by a dimensionless number. It is then shown that in two systems with identical criteria consisting of characteristic dimensions all the dust particles with identical dimensionless diameters have certain criteria in common. As a result of the examination additional criteria are in effect introduced for poly-disperse dust.

In order to ensure complete similarity all five main criteria should be the same for both model and

APPROVED FOR RELEASE: Thursday, September 26, 2002 CIA-RDP86-00513R002065710007-3
APPROVED FOR RELEASE: Thursday, September 26, 2002 CIA-RDP86-00513R002065710007-3"

specimen. This is often difficult and sometimes impossible to achieve. It is therefore desirable to cut down the number of criteria and the various ways in which this can be done are considered. It is shown that simplification is possible when the range of concentration is from 0.05 to 0.1 kg/kg, or if the force of gravity is negligible compared with the inertia forces. This latter point can be cleared up by using the test equipment in different positions, for example, if its performance does not change when it is inverted, gravity may be ignored. It is shown that when modelling on the basis of three criteria the gas speed, dispersoness and density of dust in the model are fully defined and cannot be selected arbitrarily. Therefore, this is the most difficult case of modelling. When modelling by two criteria two scales are fixed and one is arbitrary. Still further simplifications are sometimes possible.

Card 3/4

When the necessary scales have been found the necessary dust density is determined, then the best available material is chosen, and then if the density is

"APPROVED FOR RELEASE: Thursday, September 26, 2002 CIA-RDP86-00513R002065710007-3
APPROVED FOR RELEASE: Thursday, September 26, 2002 CIA-RDP86-00513R002065710007-3"

Modelling the motion of poly-disperse dusts. (Cont.)

not quite of the value required the remaining scales are altered somewhat. The various degrees of fineness required in the model dust are calculated and the material is milled in a laboratory mill. Sieve analyses are made during the course of milling until most of the dust is of the required composition. If the dust contains an excess of fines or coarse particles these are removed by appropriate sieves. A quantity of 100 - 200 grams of dust is usually necessary for tests on laboratory models and the quantity of dust required for a complete series of tests does not exceed 2 - 3 kg. In practice it is not difficult to produce such a quantity of dust of a required composition and in any case it is easier than preparing a larger quantity of close fractions.

Card 4/4 There are 4 figures and 2 references, 1 of which is Slavic.

ASSOCIATION: All-Union Thermo-technical Institute (VTI)

AVAILABLE:

"APPROVED FOR RELEASE: Thursday, September 26, 2002 CIA-RDP86-00513R002065710007-3
APPROVED FOR RELEASE: Thursday, September 26, 2002 CIA-RDP86-00513R002065710007-3"

ZVEREV N.I.

AUTHOR: Ignat'yev, V.I. (Engineer) & Zverev, N.I. (Cand.Tech.Sci.)

TITLE: The flow of dusty gas round a cylinder (Obtekaniye tsilindra zapylennym gazom.)

PERIODICAL: Teploenergetika, 1958, No.3. pp. 30-40 (USSR)

ABSTRACT: There are many processes in which dusty gas flows round a cylinder. Of the total number of particules that pass through a cross-sectional area equal to that of the cylinder, but a considerable distance in advance of it, only a proportion reach the surface of the cylinder and the remainder pass by. The ratio of those that touch the cylinder to the total number was determined in this work for various conditions and the distribution of the dust over the surface of the cylinder was studied. The experimental device consisted of a vertical channel of 500 x 50 mm section. The test cylinder was located at the centre of the section, parallel to the short side, at a distance of 45 hydraulic diameters from the inlet. Flow was always turbulent at the position of the cylinder. Arrangements were made to ensure that the conditions of air flow over the cylinder approximated to those in a boundless flow. The other experimental conditions are described. The tests were carried out with fractions of milled anthracite and metal dust (an alloy of chromium and iron) with specific gravities of 1.655 and 7.3 gram/cm^2 respectively.. The fractions were prepared in air separators. The procedure of preparation is described. The characteristics of the fractions in

"APPROVED FOR RELEASE: Thursday, September 26, 2002 CIA-RDP86-00513R002065710007-3
APPROVED FOR RELEASE: Thursday, September 26, 2002 CIA-RDP86-00513R002065710007-3"

respect of the velocity at which they fly ('pick-up speed') and hydraulic diameter (the diameter of a sphere with same density and pick-up speed) are tabulated. Dust for the tests was poured into a tube and blown into the collector by a strong jet of air from a needle valve. It was shown by special tests that with this method of delivery the suspension broke up into individual dust particles, uniformly distributed over the working section. In order to determine the proportion of dust trapped on the cylinder the cylinder was wrapped round with a ring of cinefilm 10 mm wide smeared with petrolatum, which trapped all the dust particles that touched it. The film was then compared with a transparent scale under a microscope. Various experimental procedures were used and are described. Nine series of tests were made with downward flow, anthracite dust being used in Nos.1 - 7, and metal dust in Nos. 8 & 9. Speeds of around 2, 4, 12 & 16 m/sec were used with cylinders of 12, 25 & 50 mm diameter. In each series of tests the finest fractions were used first followed by the coarser. The tests were made at room temperature and pressure. When Reynolds number for the particles is less than 0.1 the resistance to the medium acting on the particles is given by the Stokes' formula, and the St criterion defines the motion. When Reynolds number for the particles is greater than 0.1 Stokes' formula is inapplicable and motion is not uniquely governed by the

"APPROVED FOR RELEASE: Thursday, September 26, 2002 CIA-RDP86-00513R002065710007-3
APPROVED FOR RELEASE: Thursday, September 26, 2002 CIA-RDP86-00513R002065710007-3"

St criterion. Previous authors have given the proportion trapped as a unique fraction of St, usually there was a considerable scatter of points and considerable difference between the general relationships obtained by different authors. This was probably because in the experiments, Reynolds number was not low enough and instead of a unique relationship between the proportion of particles trapped and St there should have been a family of curves. The authors' test results are given in Fig.1. The accuracy of the determinations is such that a family of curves can be plotted. When the particles move in a vertical flow their relative velocity at a distance from the cylinder is practically equal to the speed of pick-up, but the velocity increases near the cylinder. In the majority of tests the Reynolds number was greater than 0.1 even in the part remote from the cylinder. Therefore, in most of the tests the resistance factor according to Stokes' law was not determined. When particles move in a vertical flow their trajectory and the proportion trapped may also depend on gravitational force. To check this point, two additional series of tests were made with anthracite dust and rising air flow at speeds of 2 and 10.6 m/second. In these tests the axial components of inertia and gravity forces were opposed so that if gravitation was important the proportion trapped should be less than in the first series of tests. The results of the tests given in Fig.2. confirm that this was so. This applies even to the

"APPROVED FOR RELEASE: Thursday, September 26, 2002 CIA-RDP86-00513R002065710007-3
APPROVED FOR RELEASE: Thursday, September 26, 2002 CIA-RDP86-00513R002065710007-3"

finest of particles for which the air speed was far above the pick-up speed. Dimensionless curves of the distribution of trapped dust over the cylinder surface are of quite a different character with upward and downward flow as will be seen from Fig.3. Therefore, gravity has a marked effect on the process. An additional criterion D is introduced that, together with the criterion St, determines the probability of particles hitting the cylinder with a downward flow of air. Fig.6. gives curves of the distribution of trapped dust on the surface of the cylinder with a downward flow of air. There are 7 figures, 1 table and 10 literature references (6 Russian and 4 English)

ASSOCIATION: All-Union Thermo-Technical Institute. (Vsesoyuznyy Teplotekhnicheskiy Institut).

AVAILABLE: Library of Congress.

"APPROVED FOR RELEASE: Thursday, September 26, 2002 CIA-RDP86-00513R002065710007-3
APPROVED FOR RELEASE: Thursday, September 26, 2002 CIA-RDP86-00513R002065710007-3"

ACCESSION NR: AT4040568 S/2546/64/000/135/0063/0090

AUTHOR: Iverev, N. I.

TITLE: Waves in the atmosphere

SOURCE: Moscow. Tsentral'ny*y institut prognozov. Trudy*, no. 135, 1964. Sinoptiko-statisticheskiye metody* prognozov pogody* (Synoptic statistical methods of weather forecasting), 63-90

TOPIC TAGS: meteorology, weather forecasting, atmospheric circulation, atmospheric wave, periodogram

ABSTRACT: On the basis of a review of the extensive bibliography, the author analyzes the literature dealing with wave processes in the atmosphere and describes the statistical methods of periodogram analysis used by various authors for detecting large-scale waves. It is shown that the statistically detected waves can be used for forecasting atmospheric circulation for as much as a month in advance. Particular attention is given to an analysis of pressure and temperature waves with periods of 5 to 7 days, discovered by a great many investigators. Consideration is given to the methods used by various authors who have found waves with periods of 12, 17, 25, 11, 13 and 22 days and many others. In each case the author has attempted to determine whether these waves are real or a mathematical

"APPROVED FOR RELEASE: Thursday, September 26, 2002 CIA-RDP86-00513R002065710007-3
APPROVED FOR RELEASE: Thursday, September 26, 2002 CIA-RDP86-00513R002065710007-3"

ACCESSION NR: AT4040568

fiction, how stable they are if real, and whether they can be extrapolated for a long period. It is concluded that wave processes with periods of 5-6, 8 and 13-14 days are stochastically real. Contrary to certain other investigators, the author believes that this fact can be used for practical purposes and that the methodology used in earlier attempts was faulty. Three significant formulas are presented which can be used for judging the presence of wave processes in the atmosphere, the most important being a spectral function of the entire process. Examples are cited showing how wave processes in cyclonic and anticyclonic activity at the mean level of the troposphere can be detected. The only period detected simultaneously in both the meridional and zonal air flow components is T = 14 days. It is shown, however, that there is no rigorous periodicity in the atmosphere; the periods of 5, 8 and 14 days are approximations. Recommendations are made for prediction of circulation at the mean level of the troposphere, although only for August, September and October. Only those waves which develop in quasi-stationary pressure systems are of practical value for the forecaster. Orig. art. has: 93 formulas and 6 tables.

ASSOCIATION: Tsentral'nyy Institut prognozov (Central Institute of Forecasts)

SUBMITTED: 00 DATE ACQ: 02Jul64 ENCL: 00

Card 2/2 SUB CODE: ES NO REF SOV: 036 OTHER: 020

"APPROVED FOR RELEASE: Thursday, September 26, 2002 CIA-RDP86-00513R002065710007-3
APPROVED FOR RELEASE: Thursday, September 26, 2002 CIA-RDP86-00513R002065710007-3"

L 14280-66 EWT(m)/EWP(w)/EWA(d)/T/EWP(t) IJP(c) JD/EW/GS

ACC NR: AT6008666 (N) SOURCE CODE: UR/0000/65/000/000/0228/0235

AUTHORS: Akimov, L. M. (Kiev); Kononchuk, N. I. (Kiev); Skladnov, I. K. (Kiev); Zverev, N. I. (Kiev); Pliskin, S. M. (Kiev); Krivenko, M. P. (Kiev); Smirnov, Yu. N. (Kiev); Lazareva, N. M. (Kiev)

ORG: none

TITLE: Investigation of the effects of several factors on the fatigue characteristics of heat resistant alloys used for turbine blade manufacture

SOURCE: Vsesoyuznoye soveshchaniye po voprosam staticheskoy i dinamicheskoy prochnosti materialov i konstruktsionnykh elementov pri vysokikh i nizkikh temperaturakh, 3d. Termoprochnost' materialov i konstruktsionnykh elementov (Thermal strength of materials and construction elements); materialy soveshchaniya. Kiev, Naukova dumka, 1965, 228-235

TOPIC TAGS: heat resistant alloy, metal property, metal fatigue/ EI437B alloy, EI617 alloy, EI867 alloy

ABSTRACT: The effects of several factors on the fatigue characteristics of heat resistant alloys EI437B, EI617 and EI867 were investigated and compared with

Card 1/3

APPROVED FOR RELEASE: Thursday, September 26, 2002 CIA-RDP86-00513R002065710007-3
APPROVED FOR RELEASE: Thursday, September 26, 2002 CIA-RDP86-00513R002065710007-3

L 14280-66

ACC NR: AT6008666

results obtained with a normal cylindrical fatigue specimen. The specimen shown in Fig. 1 was used to obtain fatigue curves ($<2 \cdot 10^7$ cycles) showing the effects

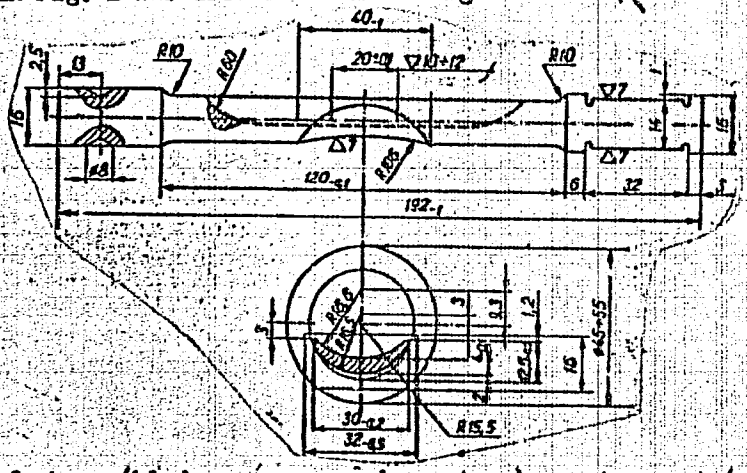

Fig. 1. Specimen geometry.

of shape (blade versus round specimen), environment (air and combustion products), cyclic heat loading, surface plating (calorizing), and temperature (373, 600, 873,

"APPROVED FOR RELEASE: Thursday, September 26, 2002 CIA-RDP86-00513R002065710007-3
APPROVED FOR RELEASE: Thursday, September 26, 2002 CIA-RDP86-00513R002065710007-3"

L 14289-66

ACC NR: AT6008666

1070K) on the fatigue properties. It was found that the above factors had the following average effects on the fatigue strength: shape--20-30% lower than round specimen; combustion products--about 25% lower than in air; cyclic heat loads--EI437B (973-473-973K)--30% lower, EI617 (1073-473-1073K)--10% lower, EI867 (1173-473-1173K)--15% lower, calorizing--15% higher; decreased strength with increasing temperature. Orig. art. has: 7 figures.

SUB CODE: 11, 13, 21/ SUBM DATE: 19Aug65

Card 3/3

"APPROVED FOR RELEASE: Thursday, September 26, 2002 CIA-RDP86-00513R002065710007-3
APPROVED FOR RELEASE: Thursday, September 26, 2002 CIA-RDP86-00513R002065710007-3

L 04920-67
ACC NR: AT6028449 SOURCE CODE: UR/2546/66/000/153/0079/0089

12

AUTHOR: Zverev, N. I.

B+1

ORG: none

TITLE: Long-range forecasting of the intensity of zonal circulation of the atmosphere

SOURCE: Moscow. Tsentral'nyy institut prognozov. Trudy, no. 153, 1966. Statisticheskiye metody dolgosrochnogo prognoza pogody (Statistical methods of long-range weather forecasting), 79-89

TOPIC TAGS: long range weather forecasting, atmospheric current, linear operator, linear equation, atmospheric circulation

ABSTRACT: The author examines the possibility of a long-range forecasting of the intensity of zonal circulation on the basis of the theory of linear extrapolation, stationary sequence, and stationary processes. A linear formula is derived for forecasting the intensity of zonal circulation which, the author asserts, is the best extrapolation formula, since for Gaussian processes the linear operator is the best operator of forecasting. From the investigation it is concluded that long-range forecasting of the intensity of zonal circulation and large-scale circulation in general can be successful only with consideration of the effect of history on the future development of synoptic processes or even of individual characteristics during the development of macroprocesses. The use of altitude-variation charts and the

Card 1/2

"APPROVED FOR RELEASE: Thursday, September 26, 2002 CIA-RDP86-00513R002065710007-3
APPROVED FOR RELEASE: Thursday, September 26, 2002 CIA-RDP86-00513R002065710007-3"

L 01020-67

ACC NR: AT6028449

changes of the isallohypses in research and operational work can prove to be an invaluable asset. High-order time derivatives can be included into the linear hydrodynamic systems of long-range forecasting. The use of the statistical method of forecasting the zonal index can improve the quality of forecasts compiled by the hydrodynamic method. Orig. art. has: 34 formulas and 1 table.

SUB CODE: 04,12/ SUBM DATE: none/ ORIG REF: 008/ OTH REF: 002

kh

Card 2/2

APPROVED FOR RELEASE: Thursday, September 26, 2002 CIA-RDP86-00513R002065710007-3
APPROVED FOR RELEASE: Thursday, September 26, 2002 CIA-RDP86-00513R002065710007-3

L 04921-67 EWT(1) GW SOURCE CODE: UR/2546/66/000/153/0064/0068

ACC NR: AT6028447

19

B+1

AUTHOR: Zverev, N. I.; Kashleva, L. I.

ORG: none

TITLE: Statistical method of forecasting the zonal index

SOURCE: Moscow. Tsentral'nyy institut prognozov. Trudy, no. 153, 1966. Statisticheskiye metody dolgosrochnogo prognoza pogody (Statistical methods of long-range weather forecasting), 64-68

TOPIC TAGS: statistic analysis, long range weather forecasting, atmospheric current, atmospheric circulation

ABSTRACT: The purpose of this investigation was to elicit the possibility of forecasting the mean monthly value of the zonal index statistically. In working out this method, the authors proceeded from the assumption that by taking into account the past history of zonal circulation it is possible to precalculate the value of the zonal index in the future by extrapolation. Having found that purely zonal circulation in its evolution undergoes variations with periods of 9 and 23 months, the authors set up multiple regression equations for forecasting the zonal index for a month with a zero and monthly length of time before the forecast phenomenon occurred. The values of the zonal index for past months were calculated as the starting data. The regression equations after "screening" the predictors had the form:

$$\Delta\hat{I}_{(n+1)} = \alpha_1\Delta I_{(n-2)} + \alpha_2\Delta I_{(n-1)} + \alpha_3\Delta I_{(n-0)} + \alpha_4; \quad (1)$$

$$\Delta\hat{I}_{(n+2)} = \beta_1\Delta I_{(n-1)} + \beta_2\Delta I_{(n-2)} + \beta_3\Delta I_{(n-0)} + \beta_4. \quad (2)$$

Card 1/2

APPROVED FOR RELEASE: Thursday, September 26, 2002 CIA-RDP86-00513R002065710007-3
APPROVED FOR RELEASE: Thursday, September 26, 2002 CIA-RDP86-00513R002065710007-3"

ACC NR: AT6028447

Here $\Delta I_{(n+m)}$ are the forecast values of the deviation of the index from the monthly norm; n is the initial number; $\Delta I_{(n-k)}$ is the deviation of the value of the zonal index (n - k) of the month from the norm of the same month; α_i, β_i are empirical influence functions ("weights"). These equations were derived separately for the cold and warm halves of the year, which in turn were divided into two halves. Equation (1) gives the forecast of the deviations of the mean monthly values of the index from the norm in the month following the initial month, and calculation by Eq. (2) gives the forecast for the next month, or the forecast of the zonal index with a 30-day length of time before the forecasting of the phenomenon occurs. An analysis of the data showed that the proposed method of extrapolation makes it possible to precalculate the intensity of zonal circulation at the mean level of the troposphere with a satisfactory guarantee. Thus, precalculation of the index can be used when compiling monthly forecasts by theoretical methods. Orig. art. has: 5 formulas, and 1 table and 2 figures.

SUB CODE: 04/ SUBM DATE: none/ ORIG REF: 007

kh

Card 2/2

"APPROVED FOR RELEASE: Thursday, September 26, 2002 CIA-RDP86-00513R002065710007-3
APPROVED FOR RELEASE: Thursday, September 26, 2002 CIA-RDP86-00513R002065710007-3"

ZVEREV, N.I.; ZVEREVA, Ye.P.

Statistical analysis of the effect of various layers of the troposphere on changes of pressure at the earth's surface. Trudy TSIP no.139:59-66 '65. (MIRA 18:6)

"APPROVED FOR RELEASE: Thursday, September 26, 2002 CIA-RDP86-00513R002065710007-3
APPROVED FOR RELEASE: Thursday, September 26, 2002 CIA-RDP86-00513R002065710007-3"

ZVEREV, N.I., kand. tekhn. nauk; KISEL'GOF, M.L., kand. tekhn. nauk

Comparison of the efficiency of coal dust cyclones. Elek. sta. 35 no.12:6-8 D '64. (MIRA 18:2)

"APPROVED FOR RELEASE: Thursday, September 26, 2002 CIA-RDP86-00513R002065710007-3
APPROVED FOR RELEASE: Thursday, September 26, 2002 CIA-RDP86-00513R002065710007-3"

BAGROV, N.A.; VASYUKOV, K.A.; ZVEREV, N.I.; PED', D.A.

Principle of analogy and its use in practical work. Trudy TSIP no.132:41-47 '64. (MIRA 17:10)

"APPROVED FOR RELEASE: Thursday, September 26, 2002 CIA-RDP86-00513R002065710007-3
APPROVED FOR RELEASE: Thursday, September 26, 2002 CIA-RDP86-00513R002065710007-3"

VASYUKOV, K.A.; ZVEREV, N.I.; PED', D.A.

Forecasting the anomaly of the average monthly air temperature.
Trudy TSIP no.132:59-63 '64. (MIRA 17:10)

"APPROVED FOR RELEASE: Thursday, September 26, 2002 CIA-RDP86-00513R002065710007-3
APPROVED FOR RELEASE: Thursday, September 26, 2002 CIA-RDP86-00513R002065710007-3"

ZVEREV, N.I.

Use of hydrodynamic analogy for weather forecasting. Trudy TSIP no.13:64-74 '64. (MIRA 17:10)

"APPROVED FOR RELEASE: Thursday, September 26, 2002 CIA-RDP86-00513R002065710007-3
APPROVED FOR RELEASE: Thursday, September 26, 2002 CIA-RDP86-00513R002065710007-3"

ZVEREV, N.I.

Waves in the atmosphere. Trudy TSIP no.135:63-90 '64
(MIRA 17:8)

"APPROVED FOR RELEASE: Thursday, September 26, 2002 CIA-RDP86-00513R002065710007-3
APPROVED FOR RELEASE: Thursday, September 26, 2002 CIA-RDP86-00513R002065710007-3"

ZVEREV, N.I., kand. tekhn. nauk; IGNAT'YEV, V.I., kand. tekhn. nauk

Precipitation of aerosol particles on a cylinder in the presence of a temperature gradient of the media. Teploenergetika 10 no.11:38-39 N '63. (MIRA 17:1)

1. Vsesoyuznyy teplotekhnicheskiy institut.

"APPROVED FOR RELEASE: Thursday, September 26, 2002 CIA-RDP86-00513R002065710007-3
APPROVED FOR RELEASE: Thursday, September 26, 2002 CIA-RDP86-00513R002065710007-3"

ZVEREV, N.I., kand.tekhn.nauk; IGNAT'YEV, V.I., kand.tekhn.nauk

Steam-blast cleaning of sticky flue ashes in order to prevent the unbalancing of flue gas pumps. Elek.sta. 33 no.12:74-76 D '62. (MIRA 16:2)

(Boilers--Cleaning)

"APPROVED FOR RELEASE: Thursday, September 26, 2002 CIA-RDP86-00513R002065710007-3
APPROVED FOR RELEASE: Thursday, September 26, 2002 CIA-RDP86-00513R002065710007-3"

LUZHNOV, G.I., inzh.; ZVEREV, N.I., kand.tekhn.nauk; GAVRILOV, A.F., inzh.; PIGALEV, V.P., inzh.

Pneumatic transportation of shot in boiler systems and methodology for its designing. Elek.sta. 33 no.11:12-19 N '62. (MIRA 15:12)

(Boilers)

"APPROVED FOR RELEASE: Thursday, September 26, 2002 CIA-RDP86-00513R002065710007-3
APPROVED FOR RELEASE: Thursday, September 26, 2002 CIA-RDP86-00513R002065710007-3"

LUSHNOV, G.I., inzh.; ZVEREV, N.I., kand.tekhn.nauk; GAVRILOV, A.F., inzh.

Experimental determination of resistance coefficients in the pneumatic transportation of pig iron shot. Teploenergetika 8 no.1:15-18 Ja '61. (MIRA 14:4)

1. Vsesoyuznyy teplotekhnicheskiy institut.
(Boilers—Cleaning) (Pneumatic-tube transportation)

"APPROVED FOR RELEASE: Thursday, September 26, 2002 CIA-RDP86-00513R002065710007-3
APPROVED FOR RELEASE: Thursday, September 26, 2002 CIA-RDP86-00513R002065710007-3"

IGNAT'YEV, V.I., kand.tekhn.nauk; ZVEREV, N.I., kand.tekhn.nauk

Flow of dusty gas around a cylinder. Teploenergetika 8 no.3: 13-16 Mr '61. (MIRA 14:9)

1. Vsesoyuznyy teplotekhnicheskiy institut.
(Gas flow)

"APPROVED FOR RELEASE: Thursday, September 26, 2002 CIA-RDP86-00513R002065710007-3
APPROVED FOR RELEASE: Thursday, September 26, 2002 CIA-RDP86-00513R002065710007-3"

ZVEREV, N.I., kand.tekhn.nauk

Adjustment of MP_VTI ash traps. Elek.sta. 32 no.4:16-22 Ap '61.
(MIRA 14:7)

(Furnaces)

"APPROVED FOR RELEASE: Thursday, September 26, 2002 CIA-RDP86-00513R002065710007-3
APPROVED FOR RELEASE: Thursday, September 26, 2002 CIA-RDP86-00513R002065710007-3"

IGNAT'YEV, V.I., insh.; ZVEREV, N.I., kand.tekhn.nauk

Laboratory air separator with a boiling layer. Teploenergetika 7 no.2:55-58 F '60. (MIRA 13:5)

1. Vsesoyuznyy teplotekhnicheskiy institut.
(Separators (Machines))

APPROVED FOR RELEASE: Thursday, September 26, 2002 CIA-RDP86-00513R002065710007-3
APPROVED FOR RELEASE: Thursday, September 26, 2002 CIA-RDP86-00513R002065710007-3"

IGNAT'IEV, V.I., inzh.; ZVEREV, M.I., kand. tekhn.nauk.

Flow of a dust-air mixture around a cylinder. Teploenergetika 5 no.3: 36-40 Mr '58. (MIRA 11:4)

1. Vsesoyuznyy teploetekhnicheskiy institut.
(Aerodynamics)

"APPROVED FOR RELEASE: Thursday, September 26, 2002 CIA-RDP86-00513R002065710007-3
APPROVED FOR RELEASE: Thursday, September 26, 2002 CIA-RDP86-00513R002065710007-3"

IGNAT'YEV, V.I.; ZVEREV, N.I.

Settling of aerosol particles on a cylinder. Inzh.-fiz. zhur. no.12:17-23 D '60. (MIRA 14:3)

1. Vsesoyuznyy teplotekhnicheskiy institut im. F.E. Dzerzhinskogo, g. Moskva.

(Aerosols)

"APPROVED FOR RELEASE: Thursday, September 26, 2002 CIA-RDP86-00513R002065710007-3
ZVERE"APPROVED FOR RELEASE: Thursday, September 26, 2002 CIA-RDP86-00513R002065710007-3"

The Storm Wind of 14 November 1952 in the South of the European Territory of the USSR. Meteorol. i gidrologiya, No 6, 1953, pp 3-7

In the southeastern European part of the USSR from 9 to 14 November 1952 wind strengths up to 28-34 meters/second were observed. The author discussed the variation of the wind regime during this period. For each day he constructs the charts of wind velocity for the ground level and for the altitude 300, 600, and 900 meters above the level of the ground. The storm arose as the result of intense dropping pressure in the lower kilometer layer, which transferred the momentum from top to bottom with the simultaneous advection of cold masses from the northeast. (RZhGeol, No 5, 1954)

SO: Sum. No. 568, 6 Jul 55

"APPROVED FOR RELEASE: Thursday, September 26, 2002 CIA-RDP86-00513R002065710007-3
APPROVED FOR RELEASE: Thursday, September 26, 2002 CIA-RDP86-00513R002065710007-3"

ZVEREV, N.I., kandidat fiziko-matematicheskikh nauk

Meteorological works of the Russian geophysicist I.N.Smirnov.
Meteor.i gidrol. no.5:56-57 My '53. (MIRA 8:9)

1. TSentral'nyy institut profsoyuzov, Moskva.
(Smirnov, Ivan Nikolaevich)

"APPROVED FOR RELEASE: Thursday, September 26, 2002 CIA-RDP86-00513R002065710007-3
APPROVED FOR RELEASE: Thursday, September 26, 2002 CIA-RDP86-00513R002065710007-3"

ZVEREV, N.I., kandidat fiziko-matematicheskikh nauk

Temperature forecast. Meteor.i gidrol. no.2:28-29 Mr-Ap '55.
(Atmospheric temperature)
(MLRA 8:7)

APPROVED FOR RELEASE: Thursday, September 26, 2002 CIA-RDP86-00513R002065710007-3
APPROVED FOR RELEASE: Thursday, September 26, 2002 CIA-RDP86-00513R002065710007-3"

ZVEREV, N. I.

AID P - 1864

Subject : USSR/Meteorology and Hydrology

Card 1/1 Pub. 71-a - 7/26

Author : Zverev, N. I.

Title : On temperature forecasting

Periodical : Met. i gidro., no.2, 28-29, 1955

Abstract : The article is an attempt to establish with equations and charts the role played by turbulence in the moving of warm air. One table and 2 charts are given.

Institution : None

Submitted : No date

"APPROVED FOR RELEASE: Thursday, September 26, 2002 CIA-RDP86-00513R002065710007-3
APPROVED FOR RELEASE: Thursday, September 26, 2002 CIA-RDP86-00513R002065710007-3"

SOV/ 124-58-5-5563

Translation from: Referativnyy zhurnal, Mekhanika, 1958, Nr 5, p 91 (USSR)

AUTHOR: Zverev, N. I.

TITLE: On the Influence of the Temperature Field of the Continent and the Ocean during the Warm Season Upon the Atmospheric Circulation in the Far East (O vliyanii temperaturnogo polya kontinenta i okeana v teploye vremya goda na atmosfernuyu tsirkulyatsiyu v usloviyakh Dal'nego Vostoka)

PERIODICAL: Tr. Tsentr. in-ta prognozov, 1957, Nr 49, pp 250-263

ABSTRACT: Bibliographic entry
1. Atmosphere--Motion 2. Oceans--Thermal effects
3. Earth--Thermal effects 4. Climatic factors--Asia

Card 1/1

"APPROVED FOR RELEASE: Thursday, September 26, 2002 CIA-RDP86-00513R002065710007-3
ZVEREV "APPROVED FOR RELEASE: Thursday, September 26, 2002 CIA-RDP86-00513R002065710007-3"

in book -
Problems in Long-range Forecasting Leningrad, Gidrometeoizdat, 1957.

Zverev, N.I. Influence of Ocean and Land Temperature on Atmospheric Circulation During the Warm Season in the Far East 250

The author analyzes the influence of thermal nonuniformity of the surface layer on the atmospheric circulation and discusses some implications from observation results pertinent to weather forecasting. The author defines nonuniformity as the phenomenon of the accumulation of heat in the surface layer and the unequal distribution of this heat in latitudinal and meridional directions. The article consists of two chapters. One examines the formation of temperature contrasts between ocean and land and the other examines the question of periodicity, i.e., the existence of definite natural temperature intervals (from 6 to 12 days), and the connection of such periods with temperatures of the near-surface air layer. The subject of temperature variation was studied by personnel of the long-term forecast division of the Far Eastern Scientific Research Institute of Hydrometeorology (DV NIGMI), The Institute

Card 8/10

APPROVED FOR RELEASE: Thursday, September 26, 2002 CIA-RDP86-00513R002065710007-3
APPROVED FOR RELEASE: Thursday, September 26, 2002 CIA-RDP86-00513R002065710007-3"

Problems in Long-range Forecasting

compiled daily temperature maps for sea and land in 1934-38. In addition, the author availed himself of the material collected in the archives of the Central Institute of Forecasts (TSIP). There are 12 maps, 6 tables, and 8 Soviet references.

Byalynitskaya, V.G., and Ped', D.A. Formation of Night Frosts in Ukraine 264

The authors place night frosts in Ukraine into the category of those that are dangerous, i.e., capable of damaging crops. This type of frosts is common both in autumn and in spring, but the authors analyze only the occurence of frosts in May. Crimea is included in this study. Tabular material includes statistics of occurrence and duration of frosts. The article analyzes the thermobaric field during the occurrence of frosts and compares it with the field when frost is absent. Pertinent

Card 9/10

"APPROVED FOR RELEASE: Thursday, September 26, 2002 CIA-RDP86-00513R002065710007-3
APPROVED FOR RELEASE: Thursday, September 26, 2002 CIA-RDP86-00513R002065710007-3"

indices are deduced and data given on how to forecast the onset of frosts one to two days in advance. There are 13 tables in the text and 2 in the appendix, 8 maps, 2 drawings, and 16 references, of which 14 are Soviet and 2 are English.

AVAILABLE: Library of Congress

MM /ksv
8-12-58

Card 10/10

APPROVED FOR RELEASE: Thursday, September 26, 2002 CIA-RDP86-00513R002065710007-3

JPRS: L-1078-N

CSO: 2965-N

PROGRESS-REPORT SESSION OF THE SCIENTIFIC COUNCIL
OF THE CENTRAL INSTITUTE OF FORECASTS
[A Translation]

5451151 [illegible]

N. I. Everev

Meteorologiya i Gidrologiya
[Meteorology and Hydrology],
No 5, 1959, pp 61-62

From 12 to 20 January 1959, in the Central Institute of Forecasts, a session of the Institute's Scientific Council was held to report on the fulfillment of its plan of scientific research work.

Three reports received attention at the Agricultural Meteorology Section of the Scientific Council.

3901180 [illegible]

L. A. Razumova and S. B. Mastinskaya described the results of three-year experimental studies conducted by a large team of researchers on the formation of the reserves of soil moisture, and the relationship between the state of spring wheat and corn and the water-supply conditions on virgin lands - in the steppe regions of Kulunda and the northern half of Kazakhstan.

The direct participants in the development of this theme included S. B. Mastinskaya, N. B. Meshchkhinova, Th. S. Mel'nik, N. A. Baybayeva, and others. Other participants were researchers from the Kazakh Scientific Research Hydrometeorological Institute, the Novosibirsk Biological Institute, the Kazakh Institute imeni Williams, the Kazakh Institute of Grain Management, and the workers of rural weather stations.

The problems broached by the lecturers roused a lively exchange of opinions. A monograph presented as a summation was approved, and the conclusions thus arrived at were acknowledged to be concrete, and valuable in practice.

The report of B. P. Ponomarev touched upon the problems of evaluating the agrometeorological conditions of the growth of spring wheat on the territory of the RSFSR. The lecturer's conclusions were inferred on the basis of experimental (laboratory and field) researches and thematic observations by a large number of

SO: OTS, Dept of Commerce, OTS:60-11,042, JPRS L-1078-N, 19 Nov 59, Uncl.

"APPROVED FOR RELEASE: Thursday, September 26, 2002 CIA-RDP86-00513R002065710007-3
APPROVED FOR RELEASE: Thursday, September 26, 2002 CIA-RDP86-00513R002065710007-3"

team's intensive labors resulted in the successful creation of a method which, although inherently synoptic, is based on definite theoretical premises. Following an extensive discussion, in the course of which many valuable comments and suggestions were voiced, this study was approved.

The writer of the present communication, moreover, presented a report of "Forecasting Precipitation for 24, 46 and 72 Hours in Advance for the Central Region of European USSR." Here the forecasting methods are based on equations of multiple regression. The Section's resolution pointed to the expediency of promoting statistical research in the field of the development of methods of long-range weather forecasting.

V. G. Shishkov reported on the results of tests of various methods of compiling monthly weather forecasts. On the basis of obtained data, the lecturer singled out the methods and procedures that can be operatively introduced in the Forecasting Service. Discussion turned attention to the expediency of continuing on a still broader scale these tests of various methods of compiling monthly weather forecasts.

Those participating in the Session's activities included representatives of the Main Administration of Hydrometeorological Service and a number of scientific research institutes (KAZNIIGMI /the Kazak Scientific Research Hydrometeorological Institute/, SV NIGMI, NIIAK, the Institute of Soil Science imeni Pokuchayev in the Academy of Sciences USSR, the Agricultural Academy imeni Timiryasev, and others). The session was attended by the Chinese meteorologists present in Moscow.

END

1786

"APPROVED FOR RELEASE: Thursday, September 26, 2002 CIA-RDP86-00513R002065710007-3
APPROVED FOR RELEASE: Thursday, September 26, 2002 CIA-RDP86-00513R002065710007-3"

3(7)
AUTHOR: Zverev, N. I.

TITLE: Final Meeting of the Scientific Council of the Central Institute of Prognosis (Itogovaya sessiya Uchenogo soveta Tsentral'nogo instituta prognozov)

PERIODICAL: Meteorologiya i gidrologiya, 1959, Nr 5, pp 61 - 62 (USSR)

ABSTRACT: On January 12-20, 1959, a meeting of the Scientific Council took place at the Tsentral'nyy institut prognozov (Central Institute of Prognosis). It was dedicated to the final results in the fulfilment of the plan for scientific research work. 3 reports were delivered in the Agrometeorological Section of the Scientific Council. L. A. Razumova and S. B. Mastinskaya put forward the results of the three-year experimental work at which the formation of ground humidity reserves and the correlation between the state of the summer wheat and corn and the water supply in the newly won land (the steppe areas of the Kulunda Steppe and of northern Kazakhstan) were investigated. S. B. Mastinskaya, N. B. Meshchaninova, Yu. S. Mel'nik, N. A. Baybayeva et al participated directly in the working out of this subject. Co-workers of the

APPROVED FOR RELEASE: Thursday, September 26, 2002 CIA-RDP86-00513R002065710007-3
APPROVED FOR RELEASE: Thursday, September 26, 2002 CIA-RDP86-00513R002065710007-3"

Final Meeting of the Scientific Council of the Central Institute of Prognosis

following organizations took part in the investigations: Kazakhskiy nauchno-issledovatel'skiy gidrometeorologicheskiy institut (Kazakh Hydrometeorological Scientific Research Institute), Novosibirskiy biologicheskiy institut (Novosibirsk Biological Institute), Kazakhskiy institut im. Vil'yamsa (Kazakh Institute imeni Vil'yams), Kazakhskiy institut zernovogo khozyaystva (Kazakh Institute of Grain Economy), as well as the co-workers of the agrometeorological stations. B. P. Ponomarev spoke on the evaluation of agrometeorological conditions for the growth of summer wheat in the area of the RSFSR. 7 reports were delivered in the Hydrological Section of the Scientific Council. The most important results were obtained by V. D. Komarov, A. N. Vazhnov, and A. I. Karakash. V. N. Parshin and Ye. G. Popov worked out a new method for the evaluation of hydrological forecasts. A. I. Afanas'yev presented conclusions on the features of the decay of the snow cover on the basis of an interpretation of aerial photographs during the melting of snow. 7 reports were delivered in the Meteorological Section. F. I. Monakhov put forward the results of experimental investiga-

September 26, 2002 CIA-RDP86-00513R002065710007-3
Thursday, September 26, 2002 CIA-RDP86-00513R002065710007-3"

Final Meeting of the Scientific Council of the [illegible]
Institute of Prognosis

tions for the determination of cyclones on the high seas by means of microseismic recording. N. P. Luzhnaya reported on the test results of the method used for forecasts of the daily temperature by O. P. Glazova, and of the method used for wind forecasts in high altitudes by A. D. Chistyakov. N. G. Leonov reported on the features of circulation above the Antarctic zone. Yu. V. Khrabrov presented the results of work of a group of collaborators in working out a new method of weather forecasts for 3-7 days. N. I. Zverev delivered a report on "The Forecast of Precipitations for 24, 46 and 72 Hours in the Central Part of the European Area of the USSR". V. G. Shishkov reported on the test results of various methods for the compilation of monthly weather forecasts. The Meeting was attended by representatives of the following authorities: Glavnoye upravleniye gidrometeosluzhby (Main Administration of the Hydrometeorological Service), Kaz-NIGMI, DV NIGMI, NIIAK, Institut pochvovedeniya im. Dokuchayeva AN SSSR (Institute of Soil Science imeni Dokuchayev of the AS USSR), Sel'skokhozyaystvennaya akademiya im

Card 3/4

"APPROVED FOR RELEASE: Thursday, September 26, 2002 CIA-RDP86-00513R002065710007-3
APPROVED FOR RELEASE: Thursday, September 26, 2002 CIA-RDP86-00513R002065710007-3"

Final Meeting of the Scientific Council of the Central Institute of Prognosis SOV/50-59-5-20/22

Timiryazeva (Agricultural Academy imeni Timiryazev). Besides, Chinese meteorologists staying in Moscow were present.

Card 4/4

APPROVED FOR RELEASE: Thursday, September 26, 2002 CIA-RDP86-00513R002065710007-3
APPROVED FOR RELEASE: Thursday, September 26, 2002 CIA-RDP86-00513R002065710007-3"

3(7) PHASE I BOOK EXPLOITATION SOV/3249

Moscow. Tsentral'nyy Institut prognozov

Voprosy dolgosrochnykh prognozov pogody (Problems in Long-Range Weather Forecasting) Moscow, Gidrometeoizdat (otd.), 1959. 62 p. (Series: Its: Trudy, vyp. 85) Errata slip inserted. 900 copies printed.

Sponsoring Agency: USSR. Sovet ministrov. Glavnoye upravleniye gidrometeorologicheskoy sluzhby.

Ed. (Title page): G. I. Morskiy; Ed. (Inside book): L. V. Blinnikov; Tech. Ed.: T. Ye. Zemtsova.

PURPOSE: This issue of the Institute's Transactions is intended for scientific research and field workers in meteorology as well as for advanced students in schools of higher education.

COVERAGE: This is a collection of three articles in synoptic and general meteorology. Two of the articles deal with problems concerning the general circulation of the atmosphere while the third discusses the matter of forecasting mean 7-day pressure maps. References accompany each article.

Card 1/3

"APPROVED FOR RELEASE: Thursday, September 26, 2002 CIA-RDP86-00513R002065710007-3
APPROVED FOR RELEASE: Thursday, September 26, 2002 CIA-RDP86-00513R002065710007-3"

TABLE OF CONTENTS:

Bayev, V. K. On the Theory of the General Circulation of the Atmosphere
The author attempts a theoretical description of the general circulation in the most general statement of the problem. This entails, first of all, the consideration of nonlinear and viscosity members in differential equations, and also the consideration of the nonadiabatic effects which play a basic role in the general circulation of the atmosphere. This work differs from others on the problem insofar as the author pays stricter attention to the dependence of the thermal properties of the underlying surface on geographic coordinates. Computations are introduced to show that temperature in time and space as well as all elements of motion may be determined when the initial distribution of meteorological elements and the heat influx from the Sun, as a function of time, are known. There are 4 references: 3 Soviet and 1 English. 3

Zverev, N. I. Forecasting a Mean AT 500 Seven-day Chart
Since most extended forecasts do not deal with weather conditions to be expected in the week immediately following the date of chart compilation, the author presents a statistical method of compiling mean 7-day charts. The author works on the basic premise that the development of synoptic processes in the future is completely determined by the history of synoptic processes over a given region. There are 7 references: 4 Soviet and 3 English. 27

"APPROVED FOR RELEASE: Thursday, September 26, 2002 CIA-RDP86-00513R002065710007-3
APPROVED FOR RELEASE: Thursday, September 26, 2002 CIA-RDP86-00513R002065710007-3"

ZVEREV, N.I.

Forecasting the mean seven-day topographic map of the 500 millibar absolute isobaric surface. Trudy TSIP no.85:27-39 '59. (MIRA 12:8)

(Atmospheric pressure)

"APPROVED FOR RELEASE: Thursday, September 26, 2002 CIA-RDP86-00513R002065710007-3
APPROVED FOR RELEASE: Thursday, September 26, 2002 CIA-RDP86-00513R002065710007-3"

ZVEREV, N.I.

Statistical method of preparing one- to three-day precipitation forcasts during the cold half-yearly period for the central area of the European part of the U.S.S.R. Trudy TSIP no.97:47-66 '60. (MIRA 14:3)

(Weather forcasting)

"APPROVED FOR RELEASE: Thursday, September 26, 2002 CIA-RDP86-00513R002065710007-3
APPROVED FOR RELEASE: Thursday, September 26, 2002 CIA-RDP86-00513R002065710007-3"

ZVEREV, N.I.; PED', D.A.

Determining the degree of analogy between fields of meteorological elements by the use of the "Pogoda" electronic computer. Meteor. i gidrol. no.10:14-18 O '60. (MIRA 13:10)
(Weather forecasting) (Electronic calculating machines)

"APPROVED FOR RELEASE: Thursday, September 26, 2002 CIA-RDP86-00513R002065710007-3
APPROVED FOR RELEASE: Thursday, September 26, 2002 CIA-RDP86-00513R002065710007-3"

ZVEREV, N.I.; MORSKOY, G.I.

Analyzing the interaction of the atmosphere and the hydrosphere.
Meteor.i gidrol. no.5:37-41 My '61. (MIRA 14:4)
(Atlantic Ocean--Ocean temperature)
(Europe, Western--Atmospheric temperature)

"APPROVED FOR RELEASE: Thursday, September 26, 2002 CIA-RDP86-00513R002065710007-3
APPROVED FOR RELEASE: Thursday, September 26, 2002 CIA-RDP86-00513R002065710007-3"

BAGROV, N.A.; ZVEROV, N.I.

Method of forecasting the H_{500} geopotential field for mean terms. (MIRA 14:5)
Trudy TSIP no.108:3-22 '61.
(Weather forecasting)

"APPROVED FOR RELEASE: Thursday, September 26, 2002 CIA-RDP86-00513R002065710007-3
APPROVED FOR RELEASE: Thursday, September 26, 2002 CIA-RDP86-00513R002065710007-3"

VASYUKOV, K.A.; ZVEREV, N.I.; PED', D.A.

Use of the analogy principle in prognoses of synoptic processes and the weather for five days. Trudy TSIP no.116:13-23 '62. (MIRA 15:5)

(Weather forecasting)

"APPROVED FOR RELEASE: Thursday, September 26, 2002 CIA-RDP86-00513R002065710007-3
APPROVED FOR RELEASE: Thursday, September 26, 2002 CIA-RDP86-00513R002065710007-3"

VASYUKOV, K.A.; ZVEREV, N.I.; PED', D.A.

Forecasting synoptic processes for the current natural synoptic period by the use of analogues. Meteor. i gidrol. no.1:27-33 Ja '62. (MIRA 15:1)

(Statistical weather forecasting)

APPROVED FOR RELEASE: Thursday, September 26, 2002 CIA-RDP86-00513R002065710007-3
APPROVED FOR RELEASE: Thursday, September 26, 2002 CIA-RDP86-00513R002065710007-3"

S/169/62/000/007/109/149
D228/D307

AUTHORS: Vasyukov, K. N., Zverev, N. I. and Ped', D. A.

TITLE: Using the principle of analogousness when forecasting synoptic prccesses and the weather for five days

PERIODICAL: Referativnyy zhurnal, Geofizika, no. 7, 1962, 48, abstract 7B257 (Tr. Tsentr. in-ta prognozov, no. 116, 1962, 13-23)

TEXT: The N-500 values for a standard grid of points, located every 4° of latitude and 12° of longitude on the territory, bounded by 36°W, 84°E, 76°N, and 36°W, were taken from the average maps for natural synoptic processes (NSP) in January and February, 1938-1955. After this the signs of the geopotential differences, respectively characterizing the zonal and the meridional flow components, were determined for meridionally and latitudinally neighboring points. The values +1, 0, and -1 were respectively ascribed to positive, zero and negative differences. The resulting magnitudes of the meridional and the zonal wind components for all NSP were

Card 1/4

"APPROVED FOR RELEASE: Thursday, September 26, 2002 CIA-RDP86-00513R002065710007-3
"APPROVED FOR RELEASE: Thursday, September 26, 2002 CIA-RDP86-00513R002065710007-3"

Using the principle ...

printed on tape. The analogs of the N-500 averages for the parameters ρ_φ and ρ_λ, characterizing the similarity of fields with respect to their circulational features, were selected for the first 20 maps by means of the electronic computer "Pogoda". The values of ρ_φ and ρ_λ were calculated from the formulas:

$$\rho_\varphi = \frac{n_{\varphi+} - n_{\varphi-}}{n_{\varphi+} + n_{\varphi-}}, \qquad \rho_\lambda = \frac{n_{\lambda+} - n_{\lambda-}}{n_{\lambda+} + n_{\lambda-}}$$

where $n_{\varphi+}$, $n_{\varphi-}$, $n_{\lambda+}$, $n_{\lambda-}$ is the number of cases when the signs of the meridional (n_φ) and the zonal (n_λ) flow components in two comparable N-500 fields of NSP do, or do not, coincide. The comparison of all NSP with the original 20 allowed the distribution of the degree of analogy for the fields of the 500-mb surface's January geopotential to be obtained from the parameters of o_φ and o_λ. It also

"APPROVED FOR RELEASE: Thursday, September 26, 2002 CIA-RDP86-00513R002065710007-3
APPROVED FOR RELEASE: Thursday, September 26, 2002 CIA-RDP86-00513R002065710007-3"

Using the principle ...

allowed the natural frequency of analogous processes to be exposed separately according to the development of the meridional and the zonal air-flow components. Utilizing the criterion ρ_φ all processes can be divided according to their degree of analogy into three categories: the analog ($\rho_\varphi \geq 0.4$), the non-analog ($\rho_\varphi = -0.3, +0.4$), and the reverse analog ($\rho_\varphi \leq -0.3$). Utilizing the criterion ρ_λ, too, we will obtain the analog $\rho_\lambda \geq 0.8$, the non-analog $\rho_\lambda = 0.2 + 0.8$, and the reverse analog $\rho_\lambda \leq 0.2$. The criteria are established with a 10% guaranty. In practical work, when classifying all processes into three categories, the degree of guaranty should be established jointly according to both criteria for the analog $\rho_\varphi \geq 0.4$ and $\rho_\lambda \geq 0.6$, the non-analog $-0.3 < \rho_\varphi < 0.4$ and $0.2 < \rho_\lambda < 0.6$, and the reverse analog $-\rho_\varphi \leq 0.3$ and $\rho_\lambda < 0.2$. Average estimates are given for the analogousness of subsequent pairs of NSP in relation to the degree of analogy of the original pairs of NSP with respect to ρ_φ

Card 3/4

"APPROVED FOR RELEASE: Thursday, September 26, 2002 CIA-RDP86-00513R002065710007-3
APPROVED FOR RELEASE: Thursday, September 26, 2002 CIA-RDP86-00513R002065710007-3"

Using the principle ...

and $\rho_{\xi} = \rho_{\varphi} + \rho_{\lambda}$. As the geometric likeness increases, the analogousness in the development of atmospheric processes in subsequent NSP grows generally. But in a number of examples it is shown, too, that the factor of geometric analogy, though it is of great significance in establishing the analogousness of atmospheric processes, does not always give practically valuable pointers to the future development of processes. In some cases originally similar processes subsequently change into non-analogs. Using modern computers it is possible by means of the analogy parameters of ρ_{φ}, ρ_{λ}, and $\rho_{\xi} = \rho_{\varphi} + \rho_{\lambda}$ to take into account objectively the development history of atmospheric processes, to solve problems connected with the choice of analogs, and so forth, which is necessary in order to forecast the weather for 3 - 7 days. [Abstracter's note: Complete translation.]

Card 4/4

"APPROVED FOR RELEASE: Thursday, September 26, 2002 CIA-RDP86-00513R002065710007-3
APPROVED FOR RELEASE: Thursday, September 26, 2002 CIA-RDP86-00513R002065710007-3"

S/169/62/000/007/110/149
D228/D307

AUTHORS: Vasyukov, K. N., Zverev, N. I. and Ped', D. A.

TITLE: Application of empirical functions of influence for forecasting mean monthly air temperature anomalies

PERIODICAL: Referativnyy zhurnal Geofizika, no. 7, 1962, 48-49, abstract 7B258 (Tr. Tsentr. in-ta prognozov, no. 116, 1962, 24-33)

TEXT: Particular synchronous and asynchronous (December-January, June-July) factors of correlation between the Moscow air temperature and the temperature (pressure) at a number of points were determined for January and July in order to investigate the influence of centers of atmospheric action (CAA) on the formation of mean monthly air temperature anomalies in the USSR's European territory and in order to derive possible prognostic relations (by preparing the equation of multiple regression). These points were chosen for the characteristic of the intensity of CAA and were located as follows: Ponta Delgada (Azores), Honolulu (Hawaiian Islands), Be-

"APPROVED FOR RELEASE: Thursday, September 26, 2002 CIA-RDP86-00513R002065710007-3
APPROVED FOR RELEASE: Thursday, September 26, 2002 CIA-RDP86-00513R002065710007-3"

Application of empirical ...

ruferdur (Iceland), Irkutsk, Tashkent, and Petropavlovsk na Kamchatka. The correlative connections between the elements under consideration (all instances of air temperature and pressure anomalies over 50 years were taken into account) are small. The highest stability (for synchronous relations) is observed between the advection of the Azores anticyclone and the mean monthly temperature anomaly at Moscow. The relations obtained appear more distinctly in cases of greater temperature or pressure deviations at CAA, selected from all the 50-year data. Magnitudes are given for synchronous and asynchronous relations between the mean monthly air temperature anomalies at Moscow and the CAA, and between the mean monthly air temperature anomalies at Moscow and the mean monthly pressure anomalies at the CAA; values are cited, too, for the synchronous relations of the mean monthly Moscow air-temperature anomalies to the pressure anomaly differences between the main CAA. When allowance is made for the state at two CAA, the asynchronous relations between the mean monthly air temperature anomalies at Moscow and the pressure at the CAA are somewhat better than if just one CAA is taken into account. Allowance is made for the sim-

"APPROVED FOR RELEASE: Thursday, September 26, 2002 CIA-RDP86-00513R002065710007-3
APPROVED FOR RELEASE: Thursday, September 26, 2002 CIA-RDP86-00513R002065710007-3"

Application of empirical ...

ultaneous influence of all CAA by means of empirical functions of influence. The problem is simplified by finding the asynchronous relations (with a month's displacement) between the state of some CAA, expressed by fluctuations in the mean monthly air temperature anomaly at Ponta Delgada, Beruferdur, Honolulu, Irkutsk, and Tashkent, and the mean monthly air temperature anomaly on the USSR's European territory according to the data of 11 stations for 1900-1940 (Arkhangel'sk, Leningrad, Syktyvkar, Riga, Moscow, Yelabuga, Orenburg, Zemetchino, Volgograd, Rostov-on-Don, Odessa). Allowance for the influence of CAA on the temperature conditions of the USSR's European territory was made by dividing all the original data into warm (April -September) and cold (October-March) periods, whose empirical functions of influence were determined separately. Coefficients of the empirical functions of influence are cited for each of the 11 points on the USSR's European territory; they were obtained on the grounds of the data's climatic processing. The values of the mean monthly air temperature anomaly (Δt) predictable for each point and month are calculated from the multiple regression equation : $\Delta t = \alpha_0 \Delta t_0 + \alpha_1 \Delta t_1 + \alpha_2 \Delta t_2 + \alpha_3 \Delta t_3 + \alpha_4 \Delta t_4$.

Card 3/4

"APPROVED FOR RELEASE: Thursday, September 26, 2002 CIA-RDP86-00513R002065710007-3
APPROVED FOR RELEASE: Thursday, September 26, 2002 CIA-RDP86-00513R002065710007-3"

Here α_0, α_1, α_2, α_3, α_4 are the respective coefficients of the empirical functions of influence for a given station on the USSR's European territory and for the stations of each of the four CAA: the Azores and Honolulu highs, the Iceland low [Abstracter's note: It is assumed that 'nelandskoy' should read 'islandskoy'], the Siberian high for the cold season, and the Mid-Asiatic low for the warm season. Δt_0, Δt_1, Δt_2, Δt_3, Δt_4 are the respective mean monthly air temperature anomalies at the same points for the preceding month. 18 out of 22 of the forecasts for the mean monthly air temperature anomaly were proved to be correct. 23 references. [Abstracter's note: Complete translation.]

APPROVED FOR RELEASE: Thursday, September 26, 2002 CIA-RDP86-00513R002065710007-3
APPROVED FOR RELEASE: Thursday, September 26, 2002 CIA-RDP86-00513R002065710007-3"

S/169/62/000/007/111/149
D228/D307

AUTHOR: Zverev, N. I.

TITLE: Forecasting the baric height field's evolution during 3 - 7 days

PERIODICAL: Referativnyy zhurnal, Geofizika, no. 7, 1962, 49, abstract 7B259 (Tr. Tsentr. in-ta prognozov, no. 116, 1962, 34-40)

TEXT: The author suggests a complex way of forecasting the evolution of the baric height field at the mean troposphere level for 3 - 7 days. The method contains the elements of theoretical and synoptic-statistical trends, from which ways of numerically forecasting the baric field for average periods are being currently developed. In accordance with G. I. Morskiy's theoretical model (Tr. Tsentr. in-ta prognozov, no. 49, 1957) the main equation is recorded in the form:

Card 1/3

APPROVED FOR RELEASE: Thursday, September 26, 2002 CIA-RDP86-00513R002065710007-3
APPROVED FOR RELEASE: Thursday, September 26, 2002 CIA-RDP86-00513R002065710007-3"

S/169/62/000/007/111/149
D228/D307

Forecasting the baric ...

$$\frac{\partial \Delta H}{\partial t} + \alpha_1 \frac{\partial H}{\partial t} + \alpha_2 \frac{\partial H}{\partial x} + \alpha_3 \Delta H + \alpha_4 (H \Delta H) = \varepsilon (x, y, t)$$

where H is the value of the N-500 geopotential; Δ is the Laplacian sign; $\alpha_1, \alpha_2, \alpha_3, \alpha_4$ are constants; and $\varepsilon (x, y, t)$ is the arbitrary function, allowing the factors not taken into account in the equation to be estimated statistically. This equation is linearized relative to a certain function $\bar{H}(x, y)$, which may in a particular case be considered as the field of the N-500 values of a natural synoptic period. The solution is made in the form of an analysis with respect to Chebyshev's polynomials, recorded in the form of a graded series, when $\bar{H}(x, y)$ is taken only in a first approximation as a second degree polynomial. Certain coefficients confronting different degrees of x and y were determined. Coefficients with younger degrees of x and y include time in a higher degree than those with older degrees. This testifies in particular that the influence of the indices of zonal and meridional transfer grows as

Card 2/3

"APPROVED FOR RELEASE: Thursday, September 26, 2002 CIA-RDP86-00513R002065710007-3
APPROVED FOR RELEASE: Thursday, September 26, 2002 CIA-RDP86-00513R002065710007-3"

S/169/62/000/007/111/149
D228/D307

the interval from the original day increases, and that the influence of indices, characterizing the development of smaller-scale disturbances, diminishes. The method allows the baric field's evolution throughout a natural synoptic period to be calculated on the basis of average AT-500 charts for the period's tendency, i.e. it enables a natural synoptic period's peculiarities to be taken into account. [Abstracter's note: Complete translation.]

"APPROVED FOR RELEASE: Thursday, September 26, 2002 CIA-RDP86-00513R002065710007-3
APPROVED FOR RELEASE: Thursday, September 26, 2002 CIA-RDP86-00513R002065710007-3"

VASYUKOV, K.A.; ZVEREV, N.I.; PED', D.A.

Application of empirical influence functions to prognoses of mean monthly air temperature anomalies. Trudy TSIP no.116:24-33 '62. (MIRA 15:5)

(Atmospheric temperature) (Weather forecasting)

...mber 26, 2002 CIA-RDP86-00513R002065710007-3
...day, September 26, 2002 CIA-RDP86-00513R002065710007-3"

S/169/62/000/007/112/149
D228/D307

AUTHORS: Duytseva, M. A. and Zverev, N. I.

TITLE: Possibility of applying L. Kletter's method of forecasting charts of the mean three-day N-850 values

PERIODICAL: Referativnyy zhurnal, Geofizika, no. 7, 1962, 49, abstract 7B260 (Tr. Tsentr. in-ta prognozov, no. 116, 1962, 65-66)

TEXT: The method, suggested by L. Kletter (Praktische Erfahrungen mit einer neuen Methode zur Ausarbeitung mittelfristiger Wetterprognosen, Arch. Meteorol., Geophys. und Bioklimatol. A, 1956, Bd. 9, H 2), was verified in conformity with the circulation conditions over the USSR's European territory. L. Kletter's method is based on the use of the linear regression equation, relating the mean three-day N-850 values to the values at 18 hrs on the initial day. For the USSR's European part the regression coefficients were determined by the method of least squares from the daily AT-850 charts for Moscow, Leningrad, Kiev, and Sverdlovsk for January and July,

Card 1/2

"APPROVED FOR RELEASE: Thursday, September 26, 2002 CIA-RDP86-00513R002065710007-3
APPROVED FOR RELEASE: Thursday, September 26, 2002 CIA-RDP86-00513R002065710007-3"

1950-1952. Out of 27 forecasts 15 proved to be correct in sign, the other 12 being incorrect. The method does not give the dynamics of the development of processes. The reason for the low justifiableness of the forecasts evidently consists of the fact that no adequate allowance is made for the regression equation's free term.
[Abstracter's note: Complete translation.]

"APPROVED FOR RELEASE: Thursday, September 26, 2002 CIA-RDP86-00513R002065710007-3
APPROVED FOR RELEASE: Thursday, September 26, 2002 CIA-RDP86-00513R002065710007-3"

VASYUKOV, K.A.; ZVEREV, N.I.; PED', D.A.

Correlation between the state of atmospheric pressure centers and the weather in the European part of the U.S.S.R. Trudy TSIP no.120:14-24 '63. (MIRA 16:6)

(Weather forecasting)

"APPROVED FOR RELEASE: Thursday, September 26, 2002 CIA-RDP86-00513R002065710007-3
APPROVED FOR RELEASE: Thursday, September 26, 2002 CIA-RDP86-00513R002065710007-3"

VASYUKOV, K.A.; ZVEREV, N.I.; PED', D.A.

Forecasting atmospheric processes by analogues for a natural synoptic period. Trudy TSIP no.120:3-13 '63. (MIRA 16:6)

(Weather forecasting)

"APPROVED FOR RELEASE: Thursday, September 26, 2002 CIA-RDP86-00513R002065710007-3
APPROVED FOR RELEASE: Thursday, September 26, 2002 CIA-RDP86-00513R002065710007-3"

ZVEREV, N.I.

Forecast of AT_{500} of the northern hemisphere for 3 to 5 days. Trudy TSIP no.120:44-48 '63. (MIRA 16:6)

(Weather forecasting)

"APPROVED FOR RELEASE: Thursday, September 26, 2002 CIA-RDP86-00513R002065710007-3
APPROVED FOR RELEASE: Thursday, September 26, 2002 CIA-RDP86-00513R002065710007-3"

ZVEREV, N.I.; PURGANSKAYA, I.P.

Practical methods of the expansion of the field of meteorological elements in respect to Chebyshev polynomials. Trudy TSIP no.123: 78-86 '63. (MIRA 16:9)

"APPROVED FOR RELEASE: Thursday, September 26, 2002 CIA-RDP86-00513R002065710007-3
APPROVED FOR RELEASE: Thursday, September 26, 2002 CIA-RDP86-00513R002065710007-3"

ZVEREV, N.I., kand.fiz.-matem.nauk

Analysis of the characteristics of zonal circulation. Meteor. i gidrol. no.2:36-40 F '64. (MIRA 17:5)

1. TSentral'nyy institut prognozov.

"APPROVED FOR RELEASE: Thursday, September 26, 2002 CIA-RDP86-00513R002065710007-3
APPROVED FOR RELEASE: Thursday, September 26, 2002 CIA-RDP86-00513R002065710007-3"

VASYUKOV, K.A., kand. fiz.-matem. nauk; ZVEREV, N.I., kand. fiz.-matem. nauk; PED', D.A., kand. geograf. nauk

Rhythms in the atmosphere and some methods of evaluating them. Meteor. i gidrol. no.1:47-49 Ja '65. (MIRA 18:2)

1. TSentral'nyy institut prognozov.

"APPROVED FOR RELEASE: Thursday, September 26, 2002 CIA-RDP86-00513R002065710007-3
APPROVED FOR RELEASE: Thursday, September 26, 2002 CIA-RDP86-00513R002065710007-3"

VASYUKOV, K.A.; ZVEREV, N.I.; PED', D.A.

Statistical method of forecasting the air temperature and the quantity of precipitation for a month. Trudy TSIP no.139:22-28 '65. (MIRA 18:6)

APPROVED FOR RELEASE: Thursday, September 26, 2002 CIA-RDP86-00513R002065710007-3
APPROVED FOR RELEASE: Thursday, September 26, 2002 CIA-RDP86-00513R002065710007-3

L 10406-67 EWT(1) IJP(c) AT SOURCE CODE: UR/2504/66/032/000/0020/0028

ACC NR: AT6033032

AUTHOR: Berezhetskiy, M. S.; Grebenshchikov, S. Ye.; Zverev, N. M.; Shpigel', I. S. 34

ORG: none

TITLE: Toroidal magnetic trap of the stellarator type with external injection of the plasma

SOURCE: AN SSSR. Fizicheskiy institut. Trudy, v. 32, 1966. Fizika plazmy (Plasma physics), 20-28

TOPIC TAGS: magnetic trap, plasma injection

ABSTRACT: The vacuum chamber of the magnetic trap under consideration was in the form of a torus with a diameter of 120 cm and a cross section diameter of 10 cm. A magnetic field of the stellarator type (without taking the toroidal character into account) has the following form:

$$\Phi = H_0 z + \frac{1}{\alpha}\sum_{k=0}^{\infty} H_p I_p(par)\sin p(\varphi - \alpha z), \qquad (1)$$

$$p = n(2k+1),$$

Card 1/2

APPROVED FOR RELEASE: Thursday, September 26, 2002 CIA-RDP86-00513R002065710007-3
APPROVED FOR RELEASE: Thursday, September 26, 2002 CIA-RDP86-00513R002065710007-3"

L 10406-67

ACC NR: AT6033032

where Φ is the scalar potential of the magnetic field; H_0 is the magnitude of the longitudinal field; H_p is the amplitude of the p-th harmonic of the helical field; r, φ, z are coordinates. There follows a mathematical development for the case of a helical field with n = 2. The article gives detailed mechanical drawings of several of the main features of the equipment used, including a cross section view of the apparatus, details of the helical winding, and a block diagram of the feeding system. A further figure shows an oscillogram of the current flowing through the winding. The experimental data confirm the validity of the approaah to the problem. "In conclusion the authors express their sincere thanks to M. S. Rabinovich for his continuing interest in the work and for his helpful discussions, as well as to Ye. P. Aleksandrov, V. I. Dudin, V. I. Kryykov, and V. P. Solov'yev who took part in the construction of the equipment, and to G. I. Os'kina who took part in the construction of the winding system." Orig. art. has: 5 formulas, 7 figures, and 1 table.

SUB CODE: 20/ SUBM DATE: none/ ORIG REF: 014/ OTH REF: 003

Card 2/2 bpp

"APPROVED FOR RELEASE: Thursday, September 26, 2002 CIA-RDP86-00513R002065710007-3
APPROVED FOR RELEASE: Thursday, September 26, 2002 CIA-RDP86-00513R002065710007-3"

BATANOV, G.M.; BEREZHETSKIY, M.S.; GREBENSHCHIKOV, S.Ye.; ZVEREV, N.M.; POPRYADUKHIN, A.P.; RABINOVICH, M.S.; SBITNIKOVA, I.S.; SHPIGEL', I.S.

Magnetic surfaces and the confinement of a plasma by helical fields in a stellarator with external injection. Dokl. AN SSSR 160 no.6: 1293-1295 F '65. (MIRA 18:2)

1. Submitted September 23, 1964.

"APPROVED FOR RELEASE: Thursday, September 26, 2002 CIA-RDP86-00513R002065710007-3
APPROVED FOR RELEASE: Thursday, September 26, 2002 CIA-RDP86-00513R002065710007-3"

PETROKANSKIY, B.I., ZHEREV, N.P., retsenzent; MIRIN, V.I., retsenzent; PETROV, A.I., retsenzent; KRISHTAL', L.I., red.

[Statistical accounting and the work analysis of a railroad branch] Statisticheskii uchet i analiz raboty otdeleniia dorogi. Moskva, Izd-vo "Transport," 1964. 218 p. (MIRA 17:5)

"APPROVED FOR RELEASE: Thursday, September 26, 2002 CIA-RDP86-00513R002065710007-3
APPROVED FOR RELEASE: Thursday, September 26, 2002 CIA-RDP86-00513R002065710007-3"

PETROKANSKIY, B.I.; ZVEREV, N.P., retsenzent; MIZIN, V.I., retsenzent; PETROV, A.I., retsenzent; KRISHTAL', L.I., red.; MURAV'YEVA, N.D., tekhn. red.

[Statistical accounting and the work analysis of a railroad division] Statisticheskii uchet i analiz raboty otdeleniia dorogi. Moskva, Izd-vo "Transport," 1964. 218 p. (MIRA 17:3)

"APPROVED FOR RELEASE: Thursday, September 26, 2002 CIA-RDP86-00513R002065710007-3
APPROVED FOR RELEASE: Thursday, September 26, 2002 CIA-RDP86-00513R002065710007-3"

S/081/61/000/023/058/061
B106/B101

AUTHORS: Reznikovskiy, M.M., Zverev, N.P., Denisova, L.L.

TITLE: An improved chamber for laboratory tests of the ozone resistance of rubbers

PERIODICAL: Referativnyy zhurnal. Khimiya, no. 23, 1961, 561, abstract 23P354. (Tr. N.-i. in-ta shin. prom-sti, sb. 7, 1960, 135-139)

TEXT: An installation guaranteeing satisfactory accuracy and reproducibility of measurements even at nonuniform O_3 distribution in the working chamber is described. In order to exclude fluctuations in the O_3 concentration, the case containing the samples revolves at a rate of 2 rpm. The contactless transmission of torque from the Warren motor is attained by means of a magnetic clutch. [Abstracter's note: Complete translation.]

Card 1/1

"APPROVED FOR RELEASE: Thursday, September 26, 2002 CIA-RDP86-00513R002065710007-3
APPROVED FOR RELEASE: Thursday, September 26, 2002 CIA-RDP86-00513R002065710007-3"

AUTHOR: Zverev, N.S., Engineer SOV/133-58-10-26/31

TITLE: On the Problem of Production of Deep Drawing Sheets for the Manufacture of Automobile Bodies (K voprosam proizvodstva avtolista dlya glubokoy vytyazhki)

PERIODICAL: Stal', 1958, Nr 10, p 948 (USSR)

ABSTRACT: The paper contains critical remarks on the previously published paper by G.D. Rogoza (Refs 1 and 2) in which the validity of Eriksen's test for deep drawing sheets was questioned. The present author considers that in order to supply quality sheets, the metal should be extensively tested on the producing works. There are 3 Soviet references.

ASSOCIATION: Gor'kovskiy avtomobil'nyy zavod (Gor'kiy Automobile Plant)

Card 1/1

"APPROVED FOR RELEASE: Thursday, September 26, 2002 CIA-RDP86-00513R002065710007-3
APPROVED FOR RELEASE: Thursday, September 26, 2002 CIA-RDP86-00513R002065710007-3"

ZVEREV, N.S.

Selecting sheet steel for deep-drawing of body parts. Avt. i trakt. prom. no.10:40-41 O '56. (MLRA 10:1)

1. Gor'kovskiy avtozavod imeni Molotova.
(Automobiles--Bodies) (Sheet steel)

"APPROVED FOR RELEASE: Thursday, September 26, 2002 CIA-RDP86-00513R002065710007-3
APPROVED FOR RELEASE: Thursday, September 26, 2002 CIA-RDP86-00513R002065710007-3"

ZVEREV, N.S.

Using cold-rolled sheets of nonaged steels for stamping body parts of passenger cars. Avt. i trakt. prom. no.6:31-32 Je '56. (MLRA 9:9)

1. Gor'kovskiy avtozavod imeni Molotova.
(Automobiles--Bodies) (Sheet steel)

"APPROVED FOR RELEASE: Thursday, September 26, 2002 CIA-RDP86-00513R002065710007-3
APPROVED FOR RELEASE: Thursday, September 26, 2002 CIA-RDP86-00513R002065710007-3"

AUTHOR: Zverev, N.S. SOV-113-58-9-15/19

TITLE: Tests of Imported and Domestic Cold-Rolled Plate for Automobile Bodies (Ispytaniya importnogo i otechestvennogo avtokuzovnogo kholodnokatanogo lista)

PERIODICAL: Avtombil'naya promyshlennost', 1958, Nr 9, pp 38-40 (USSR)

ABSTRACT: The Gor'kiy Motor Vehicle Plant, and also several other Soviet automobile plants, satisfied part of its requirements for cold-rolled plate for car production by imports. Especially the Gor'kiy plant obtained cold-rolled steel plate from the USA, England, West Germany and France. In order to compare the chemical analysis, mechanical properties and pressing results of the imported steel plate and that produced by the zavod "Zaporozhstal'" (Zaporozhstal'" Plant), tests of both kinds were carried out. The test results are presented on 4 tables: The percentage in the plate of carbon, manganese and sulphur (Table 1); yield point, elongation, relation between the yield point and the ultimate strength at rupture, hardness R_B, extension by Erichsen cupping test in mm, grain size in ball-marks, waste at punching (Table 2), the same data for the angular body panels of the "Pobeda" car (Table 3) and stamping results for other parts (Table 4). The author

Card 1/2

"APPROVED FOR RELEASE: Thursday, September 26, 2002 CIA-RDP86-00513R002065710007-3
APPROVED FOR RELEASE: Thursday, September 26, 2002 CIA-RDP86-00513R002065710007-3"

Tests of Imported and Domestic Cold-Rolled Plate for Automobile Bodies

evaluates these results and strongly recommends their consideration in the establishment of relevant GOST standards for the motor vehicle plants.
There are 4 tables and 3 Soviet references.

ASSOCIATION: Gor'kovskiy avtozavod (The Gor'kiy Motor Vehicle Plant)

1. Automobile industry--USSR 2. Metal plates--Effectiveness

APPROVED FOR RELEASE: Thursday, September 26, 2002 CIA-RDP86-00513R002065710007-3
APPROVED FOR RELEASE: Thursday, September 26, 2002 CIA-RDP86-00513R002065710007-3

INFLUENCE OF FREE FERRITE ON IMPACT STRENGTH. N. S. Zverev. Vestnik Metallopromy. 14, 98-102(1934)(in Russian); Met Abstracts (In Metals and Alloys) 6, 508. Low impact strength observed in processing parts made of steel contg. C 0.34-0.39, Mn 0.33-0.46, Si 0.21-0.34 and Cr 0.42-1.12% was due to the presence of free ferrite either

not brought into soln. before quenching or quenched too slowly for retaining it in soln. G. G.

ASM-SLA METALLURGICAL LITERATURE CLASSIFICATION

"APPROVED FOR RELEASE: Thursday, September 26, 2002 CIA-RDP86-00513R002065710007-3
APPROVED FOR RELEASE: Thursday, September 26, 2002 CIA-RDP86-00513R002065710007-3"

ZVEREV, N.S.

Testing imported and Russian made cold rolled sheets used for automobile bodies. Avt. prom. no.9:38-40 S '58. (MIRA 11:10)

1.Gor'kovskiy avtozavod.
(Sheet steel--Testing)

"APPROVED FOR RELEASE: Thursday, September 26, 2002 CIA-RDP86-00513R002065710007-3
APPROVED FOR RELEASE: Thursday, September 26, 2002 CIA-RDP86-00513R002065710007-3"

ZVEREV, N.V.; SHVYDKO, Z.A., red.; GRABARNIK, A.Z., red.; TURABAYEV, B., tekhn.red.

[Kazakhstan in the seven-year plan] Kazakhstan v semiletke; sbornik statei i ocherkov. Alma-Ata, Kazakhskoe gos.izd-vo, 1960. 238 p. (MIRA 13:12)
(Kazakhstan--Economic conditions)

APPROVED FOR RELEASE: Thursday, September 26, 2002 CIA-RDP86-00513R002065710007-3
APPROVED FOR RELEASE: Thursday, September 26, 2002 CIA-RDP86-00513R002065710007-3

2 ZVEREV, N.V.

BUCHKIN, Boris Alekseyevich; DOLGOPYATOV, Yu.A., red.; ZVEREV, N.V., spetsredaktor; NAGIBIN, P.A., tekhn.red.

[Kazakhstan is a republic of large-scale state farm production] Kazakhstan-respublika krupnogo sovkhoznogo proizvodstva. Alma-Ata, Kazakhskoe gos.izd-vo, 1956. 129 p. (MIRA 10:12)

(Kazakhstan--State farms)

"APPROVED FOR RELEASE: Thursday, September 26, 2002 CIA-RDP86-00513R002065710007-3
APPROVED FOR RELEASE: Thursday, September 26, 2002 CIA-RDP86-00513R002065710007-3"

ZVEREV, Nikolay Vasil'yevich, zhurnalist; MYAGKOV, M.M., red.; RAKOV, S.I., tekhn.red.

[A factory committee and production potentials] Zavkom i rezervy proizvodstva. Moskva, Izd-vo VTsSPS Profizdat, 1959. 77 p. (MIRA 14:2)
(Balkhash--Copper industry) (Trade unions)

"APPROVED FOR RELEASE: Thursday, September 26, 2002 CIA-RDP86-00513R002065710007-3
APPROVED FOR RELEASE: Thursday, September 26, 2002 CIA-RDP86-00513R002065710007-3"

ZVEREV, M.K., redaktor; SHILOV, F.G., redaktor; MAGIBIN, P.A., tekhnicheskiy redaktor

[New construction in Kazakhstan during the sixth five-year plan] Novostroiki shestoi piatiletki Kazakhstana. Alma-Ata, Kazakhskoe gos.izd-vo, 1957. 134 p. (MLRA 10:9)
(Kazakhstan--Industries) (Kazakhstan--Building)

"APPROVED FOR RELEASE: Thursday, September 26, 2002 CIA-RDP86-00513R002065710007-3
APPROVED FOR RELEASE: Thursday, September 26, 2002 CIA-RDP86-00513R002065710007-3"

ZVEREV, Nikolay Vasil'yevich; MATSKEVICH, Oleg Vasil'yevich; PRIKHOD'KO, S., red.

[Kazakhstan, the country of eagle's wings]Kazakhstan - strana orlinykh kryl'yev. Alma-Ata,"Kazakhstan", 1965. 172 p. (MIRA 18:12)

"APPROVED FOR RELEASE: Thursday, September 26, 2002 CIA-RDP86-00513R002065710007-3
APPROVED FOR RELEASE: Thursday, September 26, 2002 CIA-RDP86-00513R002065710007-3"

ZVEREV, O.S., otv. red.; MOSKOVSKAYA, L.M., red. izd-va; ZENDEL', M.Ye., tekhn. red.

[Fishes of the Usa River basin and their feeding resources] Ryby basseina r.Usy i ikh kormovye resursy. Moskva, Izd-vo Akad. nauk SSSR, 1962. 274 p. (MIRA 15:6)

1. Akademiya nauk SSSR. Komi filial, Syktyvkar.
(Usa Valley--Fishes)

"APPROVED FOR RELEASE: Thursday, September 26, 2002 CIA-RDP86-00513R002065710007-3
APPROVED FOR RELEASE: Thursday, September 26, 2002 CIA-RDP86-00513R002065710007-3"

MIKHAYLOV, A.A., otv.red.; ZVEREV, M.S., red.; KULIKOVSKIY, P.G., red.; MASEVICH, A.G., red.; MUSTEL', E.R., red.; SOBOLEV, V.V., red.; SUBBOTIN, M.F., red.; SAMSONENKO, L.V., red.; TUMARKINA, N.A., tekhn.red.

[Astronomy in the U.S.S.R. during forty years 1917-1957; collected articles] Astronomiia v SSSR za sorok let, 1917-1957; sbornik statei. Red.kollegiia: A.A.Mikhailov i dr. Moskva, Gos.izd-vo fiziko-matem.lit-ry, 1960. 728 p.

(MIRA 13:7)

(Astronomy--History)

"APPROVED FOR RELEASE: Thursday, September 26, 2002 CIA-RDP86-00513R002065710007-3
APPROVED FOR RELEASE: Thursday, September 26, 2002 CIA-RDP86-00513R002065710007-3"

1. ZVEREV, N. I. : KRESTOV, B.D. ; ENG.

2. USSR (600)

4. Ash Disposal

7. Apparatus VTI for washing out ashes. Rab. energ. 2 no. 10, 1952

9. Monthly List of Russian Accessions, Library of Congress, January 1953. Unclassified.

"APPROVED FOR RELEASE: Thursday, September 26, 2002 CIA-RDP86-00513R002065710007-3
APPROVED FOR RELEASE: Thursday, September 26, 2002 CIA-RDP86-00513R002065710007-3"

1. ZVEREV, N. I.

2. USSR (600)

4. Dust - Removal

7. Dust collector model VTI. Elek. sta. 23 No. 2, 1953.

9. **Monthly List of Russian Accessions**, Library of Congress, June 1953. Unclassified.

APPROVED FOR RELEASE: Thursday, September 26, 2002 CIA-RDP86-00513R002065710007-3
APPROVED FOR RELEASE: Thursday, September 26, 2002 CIA-RDP86-00513R002065710007-3"

ZVEREV, N.I. kandidat tekhnicheskikh nauk

Calculation of the suction flue of baffle-type fly-ash collectors. Teploenergetika 2 no.5:44-49 My '55. (MIRA 8:9)

1. Vsesoyuznyy teplotekhnicheskiy institut
(Dust collectors)

APPROVED FOR RELEASE: Thursday, September 26, 2002 CIA-RDP86-00513R002065710007-3
APPROVED FOR RELEASE: Thursday, September 26, 2002 CIA-RDP86-00513R002065710007-3"

ZVEREV, N. I.

AID P - 2328

Subject : USSR/Electricity

Card 1/1 Pub. 110-a - 9/17

Author : Zverev, N. I., Kand. of Tech. Sci.

Title : Computing the outlet pipe of a screen-type ash catcher

Periodical : Teploenergetika, 5, 44-49, My 1955

Abstract : A mathematical analysis for designing a screen-type ash catcher equipped with an ejector is presented with tables, curves and equations. Five diagrams.

Institution : All-Union Heat Technology Institute

Submitted : No date

APPROVED FOR RELEASE: Thursday, September 26, 2002 CIA-RDP86-00513R002065710007-3
APPROVED FOR RELEASE: Thursday, September 26, 2002 CIA-RDP86-00513R002065710007-3"

AUTHOR: Zverev, N.I., Candidate of Technical Sciences.

TITLE: Modelling the motion of poly-disperse dusts. 96-7-7/25
(Modelirovaniye dvizheniya polidispersnoy pyli.)

PERIODICAL: "Teploenergetika" (Thermal Power), 1957, Vol.4, No.7, pp. 35 - 38 (U.S.S.R.)

ABSTRACT: In a previous article the author showed that there are five criteria that characterise the steady motion of dusty gas or liquid. Two of these criteria include the diameter of a dust particle. Consequently these criteria are only applicable to mono-disperse dusts (that is dust consisting of particles of one size only). In practice we have to deal almost exclusively with poly-disperse dusts, that is dusts consisting of particles of many sizes. At low dust concentrations when the motions of different fractions do not interact on one another modelling may be effected by sub-dividing the poly-disperse dust into a number of narrow fractions and using corresponding fractions in the model. However, this procedure is very laborious and is quite inapplicable at high concentrations. Neither is it permissible to introduce some sort of mean

Card 1/4

APPROVED FOR RELEASE: Thursday, September 26, 2002 CIA-RDP86-00513R002065710007-3
APPROVED FOR RELEASE: Thursday, September 26, 2002 CIA-RDP86-00513R002065710007-3"

diameter into the criteria since in order to choose the diameter correctly it is necessary to know in advance the function that it is required to find.

All this severely limits the possibilities of modelling for the study of industrial equipment and, therefore, it is necessary to find additional conditions of similarity of motion of poly-disperse dusts.

The similarity of motion of two dust flows is then considered. During the course of the examination the dimensions of the dust particles are expressed as a ratio of a dimension which is characteristic for the given dust so that the diameter of the particle is expressed by a dimensionless number. It is then shown that in two systems with identical criteria consisting of characteristic dimensions all the dust particles with identical dimensionless diameters have certain criteria in common. As a result of the examination additional criteria are in effect introduced for poly-disperse dust.

In order to ensure complete similarity all five main criteria should be the same for both model and

APPROVED FOR RELEASE: Thursday, September 26, 2002 CIA-RDP86-00513R002065710007-3
APPROVED FOR RELEASE: Thursday, September 26, 2002 CIA-RDP86-00513R002065710007-3"

specimen. This is often difficult and sometimes impossible to achieve. It is therefore desirable to cut down the number of criteria and the various ways in which this can be done are considered. It is shown that simplification is possible when the range of concentration is from 0.05 to 0.1 kg/kg, or if the force of gravity is negligible compared with the inertia forces. This latter point can be cleared up by using the test equipment in different positions, for example, if its performance does not change when it is inverted, gravity may be ignored. It is shown that when modelling on the basis of three criteria the gas speed, dispersoness and density of dust in the model are fully defined and cannot be selected arbitrarily. Therefore, this is the most difficult case of modelling. When modelling by two criteria two scales are fixed and one is arbitrary. Still further simplifications are sometimes possible.

Card 3/4

When the necessary scales have been found the necessary dust density is determined, then the best available material is chosen, and then if the density is

"APPROVED FOR RELEASE: Thursday, September 26, 2002 CIA-RDP86-00513R002065710007-3
APPROVED FOR RELEASE: Thursday, September 26, 2002 CIA-RDP86-00513R002065710007-3"

Modelling the motion of poly-disperse dusts. (Cont.)

not quite of the value required the remaining scales are altered somewhat. The various degrees of fineness required in the model dust are calculated and the material is milled in a laboratory mill. Sieve analyses are made during the course of milling until most of the dust is of the required composition. If the dust contains an excess of fines or coarse particles these are removed by appropriate sieves. A quantity of 100 - 200 grams of dust is usually necessary for tests on laboratory models and the quantity of dust required for a complete series of tests does not exceed 2 - 3 kg. In practice it is not difficult to produce such a quantity of dust of a required composition and in any case it is easier than preparing a larger quantity of close fractions.

Card 4/4 There are 4 figures and 2 references, 1 of which is Slavic.

ASSOCIATION: All-Union Thermo-technical Institute (VTI)

AVAILABLE:

"APPROVED FOR RELEASE: Thursday, September 26, 2002 CIA-RDP86-00513R002065710007-3
APPROVED FOR RELEASE: Thursday, September 26, 2002 CIA-RDP86-00513R002065710007-3"

ZVEREV N.I.

AUTHOR: Ignat'yev, V.I. (Engineer) & Zverev, N.I. (Cand.Tech.Sci.)

TITLE: The flow of dusty gas round a cylinder (Obtekaniye tsilindra zapylennym gazom.)

PERIODICAL: Teploenergetika, 1958, No.3. pp. 30-40 (USSR)

ABSTRACT: There are many processes in which dusty gas flows round a cylinder. Of the total number of particules that pass through a cross-sectional area equal to that of the cylinder, but a considerable distance in advance of it, only a proportion reach the surface of the cylinder and the remainder pass by. The ratio of those that touch the cylinder to the total number was determined in this work for various conditions and the distribution of the dust over the surface of the cylinder was studied. The experimental device consisted of a vertical channel of 500 x 50 mm section. The test cylinder was located at the centre of the section, parallel to the short side, at a distance of 45 hydraulic diameters from the inlet. Flow was always turbulent at the position of the cylinder. Arrangements were made to ensure that the conditions of air flow over the cylinder approximated to those in a boundless flow. The other experimental conditions are described. The tests were carried out with fractions of milled anthracite and metal dust (an alloy of chromium and iron) with specific gravities of 1.655 and 7.3 gram/cm^2 respectively.. The fractions were prepared in air separators. The procedure of preparation is described. The characteristics of the fractions in

"APPROVED FOR RELEASE: Thursday, September 26, 2002 CIA-RDP86-00513R002065710007-3
APPROVED FOR RELEASE: Thursday, September 26, 2002 CIA-RDP86-00513R002065710007-3"

respect of the velocity at which they fly ('pick-up speed') and hydraulic diameter (the diameter of a sphere with same density and pick-up speed) are tabulated. Dust for the tests was poured into a tube and blown into the collector by a strong jet of air from a needle valve. It was shown by special tests that with this method of delivery the suspension broke up into individual dust particles, uniformly distributed over the working section. In order to determine the proportion of dust trapped on the cylinder the cylinder was wrapped round with a ring of cinefilm 10 mm wide smeared with petrolatum, which trapped all the dust particles that touched it. The film was then compared with a transparent scale under a microscope. Various experimental procedures were used and are described. Nine series of tests were made with downward flow, anthracite dust being used in Nos.1 - 7, and metal dust in Nos. 8 & 9. Speeds of around 2, 4, 12 & 16 m/sec were used with cylinders of 12, 25 & 50 mm diameter. In each series of tests the finest fractions were used first followed by the coarser. The tests were made at room temperature and pressure. When Reynolds number for the particles is less than 0.1 the resistance to the medium acting on the particles is given by the Stokes' formula, and the St criterion defines the motion. When Reynolds number for the particles is greater than 0.1 Stokes' formula is inapplicable and motion is not uniquely governed by the

"APPROVED FOR RELEASE: Thursday, September 26, 2002 CIA-RDP86-00513R002065710007-3
APPROVED FOR RELEASE: Thursday, September 26, 2002 CIA-RDP86-00513R002065710007-3"

St criterion. Previous authors have given the proportion trapped as a unique fraction of St, usually there was a considerable scatter of points and considerable difference between the general relationships obtained by different authors. This was probably because in the experiments, Reynolds number was not low enough and instead of a unique relationship between the proportion of particles trapped and St there should have been a family of curves. The authors' test results are given in Fig.1. The accuracy of the determinations is such that a family of curves can be plotted. When the particles move in a vertical flow their relative velocity at a distance from the cylinder is practically equal to the speed of pick-up, but the velocity increases near the cylinder. In the majority of tests the Reynolds number was greater than 0.1 even in the part remote from the cylinder. Therefore, in most of the tests the resistance factor according to Stokes' law was not determined. When particles move in a vertical flow their trajectory and the proportion trapped may also depend on gravitational force. To check this point, two additional series of tests were made with anthracite dust and rising air flow at speeds of 2 and 10.6 m/second. In these tests the axial components of inertia and gravity forces were opposed so that if gravitation was important the proportion trapped should be less than in the first series of tests. The results of the tests given in Fig.2. confirm that this was so. This applies even to the

"APPROVED FOR RELEASE: Thursday, September 26, 2002 CIA-RDP86-00513R002065710007-3
APPROVED FOR RELEASE: Thursday, September 26, 2002 CIA-RDP86-00513R002065710007-3"

finest of particles for which the air speed was far above the pick-up speed. Dimensionless curves of the distribution of trapped dust over the cylinder surface are of quite a different character with upward and downward flow as will be seen from Fig.3. Therefore, gravity has a marked effect on the process. An additional criterion D is introduced that, together with the criterion St, determines the probability of particles hitting the cylinder with a downward flow of air. Fig.6. gives curves of the distribution of trapped dust on the surface of the cylinder with a downward flow of air. There are 7 figures, 1 table and 10 literature references (6 Russian and 4 English)

ASSOCIATION: All-Union Thermo-Technical Institute. (Vsesoyuznyy Teplotekhnicheskiy Institut).

AVAILABLE: Library of Congress.

"APPROVED FOR RELEASE: Thursday, September 26, 2002 CIA-RDP86-00513R002065710007-3
APPROVED FOR RELEASE: Thursday, September 26, 2002 CIA-RDP86-00513R002065710007-3"

ACCESSION NR: AT4040568 S/2546/64/000/135/0063/0090

AUTHOR: Iverev, N. I.

TITLE: Waves in the atmosphere

SOURCE: Moscow. Tsentral'ny*y institut prognozov. Trudy*, no. 135, 1964. Sinoptiko-statisticheskiye metody* prognozov pogody* (Synoptic statistical methods of weather forecasting), 63-90

TOPIC TAGS: meteorology, weather forecasting, atmospheric circulation, atmospheric wave, periodogram

ABSTRACT: On the basis of a review of the extensive bibliography, the author analyzes the literature dealing with wave processes in the atmosphere and describes the statistical methods of periodogram analysis used by various authors for detecting large-scale waves. It is shown that the statistically detected waves can be used for forecasting atmospheric circulation for as much as a month in advance. Particular attention is given to an analysis of pressure and temperature waves with periods of 5 to 7 days, discovered by a great many investigators. Consideration is given to the methods used by various authors who have found waves with periods of 12, 17, 25, 11, 13 and 22 days and many others. In each case the author has attempted to determine whether these waves are real or a mathematical

"APPROVED FOR RELEASE: Thursday, September 26, 2002 CIA-RDP86-00513R002065710007-3
APPROVED FOR RELEASE: Thursday, September 26, 2002 CIA-RDP86-00513R002065710007-3"

ACCESSION NR: AT4040568

fiction, how stable they are if real, and whether they can be extrapolated for a long period. It is concluded that wave processes with periods of 5-6, 8 and 13-14 days are stochastically real. Contrary to certain other investigators, the author believes that this fact can be used for practical purposes and that the methodology used in earlier attempts was faulty. Three significant formulas are presented which can be used for judging the presence of wave processes in the atmosphere, the most important being a spectral function of the entire process. Examples are cited showing how wave processes in cyclonic and anticyclonic activity at the mean level of the troposphere can be detected. The only period detected simultaneously in both the meridional and zonal air flow components is T = 14 days. It is shown, however, that there is no rigorous periodicity in the atmosphere; the periods of 5, 8 and 14 days are approximations. Recommendations are made for prediction of circulation at the mean level of the troposphere, although only for August, September and October. Only those waves which develop in quasi-stationary pressure systems are of practical value for the forecaster. Orig. art. has: 93 formulas and 6 tables.

ASSOCIATION: Tsentral'nyy Institut prognozov (Central Institute of Forecasts)

SUBMITTED: 00 DATE ACQ: 02Jul64 ENCL: 00

Card 2/2 SUB CODE: ES NO REF SOV: 036 OTHER: 020

"APPROVED FOR RELEASE: Thursday, September 26, 2002 CIA-RDP86-00513R002065710007-3
APPROVED FOR RELEASE: Thursday, September 26, 2002 CIA-RDP86-00513R002065710007-3"

L 14280-66 EWT(m)/EWP(w)/EWA(d)/T/EWP(t) IJP(c) JD/EW/GS

ACC NR: AT6008666 (N) SOURCE CODE: UR/0000/65/000/000/0228/0235

AUTHORS: Akimov, L. M. (Kiev); Kononchuk, N. I. (Kiev); Skladnov, I. K. (Kiev); Zverev, N. I. (Kiev); Pliskin, S. M. (Kiev); Krivenko, M. P. (Kiev); Smirnov, Yu. N. (Kiev); Lazareva, N. M. (Kiev)

ORG: none

TITLE: Investigation of the effects of several factors on the fatigue characteristics of heat resistant alloys used for turbine blade manufacture

SOURCE: Vsesoyuznoye soveshchaniye po voprosam staticheskoy i dinamicheskoy prochnosti materialov i konstruktsionnykh elementov pri vysokikh i nizkikh temperaturakh, 3d. Termoprochnost' materialov i konstruktsionnykh elementov (Thermal strength of materials and construction elements); materialy soveshchaniya. Kiev, Naukova dumka, 1965, 228-235

TOPIC TAGS: heat resistant alloy, metal property, metal fatigue/ EI437B alloy, EI617 alloy, EI867 alloy

ABSTRACT: The effects of several factors on the fatigue characteristics of heat resistant alloys EI437B, EI617 and EI867 were investigated and compared with

Card 1/3

APPROVED FOR RELEASE: Thursday, September 26, 2002 CIA-RDP86-00513R002065710007-3
APPROVED FOR RELEASE: Thursday, September 26, 2002 CIA-RDP86-00513R002065710007-3

L 14280-66

ACC NR: AT6008666

results obtained with a normal cylindrical fatigue specimen. The specimen shown in Fig. 1 was used to obtain fatigue curves ($<2 \cdot 10^7$ cycles) showing the effects

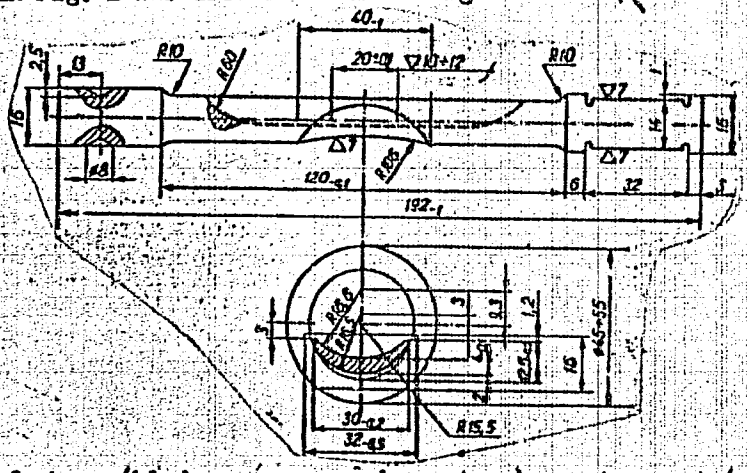

Fig. 1. Specimen geometry.

of shape (blade versus round specimen), environment (air and combustion products), cyclic heat loading, surface plating (calorizing), and temperature (373, 600, 873,

"APPROVED FOR RELEASE: Thursday, September 26, 2002 CIA-RDP86-00513R002065710007-3
APPROVED FOR RELEASE: Thursday, September 26, 2002 CIA-RDP86-00513R002065710007-3"

L 14289-66

ACC NR: AT6008666

1070K) on the fatigue properties. It was found that the above factors had the following average effects on the fatigue strength: shape--20-30% lower than round specimen; combustion products--about 25% lower than in air; cyclic heat loads--EI437B (973-473-973K)--30% lower, EI617 (1073-473-1073K)--10% lower, EI867 (1173-473-1173K)--15% lower, calorizing--15% higher; decreased strength with increasing temperature. Orig. art. has: 7 figures.

SUB CODE: 11, 13, 21/ SUBM DATE: 19Aug65

Card 3/3

"APPROVED FOR RELEASE: Thursday, September 26, 2002 CIA-RDP86-00513R002065710007-3
APPROVED FOR RELEASE: Thursday, September 26, 2002 CIA-RDP86-00513R002065710007-3

L 04920-67
ACC NR: AT6028449 SOURCE CODE: UR/2546/66/000/153/0079/0089

12

AUTHOR: Zverev, N. I.

B+1

ORG: none

TITLE: Long-range forecasting of the intensity of zonal circulation of the atmosphere

SOURCE: Moscow. Tsentral'nyy institut prognozov. Trudy, no. 153, 1966. Statisticheskiye metody dolgosrochnogo prognoza pogody (Statistical methods of long-range weather forecasting), 79-89

TOPIC TAGS: long range weather forecasting, atmospheric current, linear operator, linear equation, atmospheric circulation

ABSTRACT: The author examines the possibility of a long-range forecasting of the intensity of zonal circulation on the basis of the theory of linear extrapolation, stationary sequence, and stationary processes. A linear formula is derived for forecasting the intensity of zonal circulation which, the author asserts, is the best extrapolation formula, since for Gaussian processes the linear operator is the best operator of forecasting. From the investigation it is concluded that long-range forecasting of the intensity of zonal circulation and large-scale circulation in general can be successful only with consideration of the effect of history on the future development of synoptic processes or even of individual characteristics during the development of macroprocesses. The use of altitude-variation charts and the

Card 1/2

"APPROVED FOR RELEASE: Thursday, September 26, 2002 CIA-RDP86-00513R002065710007-3
APPROVED FOR RELEASE: Thursday, September 26, 2002 CIA-RDP86-00513R002065710007-3"

L 01020-67

ACC NR: AT6028449

changes of the isallohypses in research and operational work can prove to be an invaluable asset. High-order time derivatives can be included into the linear hydrodynamic systems of long-range forecasting. The use of the statistical method of forecasting the zonal index can improve the quality of forecasts compiled by the hydrodynamic method. Orig. art. has: 34 formulas and 1 table.

SUB CODE: 04,12/ SUBM DATE: none/ ORIG REF: 008/ OTH REF: 002

kh

Card 2/2

APPROVED FOR RELEASE: Thursday, September 26, 2002 CIA-RDP86-00513R002065710007-3
APPROVED FOR RELEASE: Thursday, September 26, 2002 CIA-RDP86-00513R002065710007-3

L 04921-67 EWT(1) GW SOURCE CODE: UR/2546/66/000/153/0064/0068

ACC NR: AT6028447

19

B+1

AUTHOR: Zverev, N. I.; Kashleva, L. I.

ORG: none

TITLE: Statistical method of forecasting the zonal index

SOURCE: Moscow. Tsentral'nyy institut prognozov. Trudy, no. 153, 1966. Statisticheskiye metody dolgosrochnogo prognoza pogody (Statistical methods of long-range weather forecasting), 64-68

TOPIC TAGS: statistic analysis, long range weather forecasting, atmospheric current, atmospheric circulation

ABSTRACT: The purpose of this investigation was to elicit the possibility of forecasting the mean monthly value of the zonal index statistically. In working out this method, the authors proceeded from the assumption that by taking into account the past history of zonal circulation it is possible to precalculate the value of the zonal index in the future by extrapolation. Having found that purely zonal circulation in its evolution undergoes variations with periods of 9 and 23 months, the authors set up multiple regression equations for forecasting the zonal index for a month with a zero and monthly length of time before the forecast phenomenon occurred. The values of the zonal index for past months were calculated as the starting data. The regression equations after "screening" the predictors had the form:

$$\Delta\hat{I}_{(n+1)} = \alpha_1\Delta I_{(n-2)} + \alpha_2\Delta I_{(n-1)} + \alpha_3\Delta I_{(n-0)} + \alpha_4; \quad (1)$$

$$\Delta\hat{I}_{(n+2)} = \beta_1\Delta I_{(n-1)} + \beta_2\Delta I_{(n-2)} + \beta_3\Delta I_{(n-0)} + \beta_4. \quad (2)$$

Card 1/2

APPROVED FOR RELEASE: Thursday, September 26, 2002 CIA-RDP86-00513R002065710007-3
APPROVED FOR RELEASE: Thursday, September 26, 2002 CIA-RDP86-00513R002065710007-3"

ACC NR: AT6028447

Here $\Delta I_{(n+m)}$ are the forecast values of the deviation of the index from the monthly norm; n is the initial number; $\Delta I_{(n-k)}$ is the deviation of the value of the zonal index (n - k) of the month from the norm of the same month; α_i, β_i are empirical influence functions ("weights"). These equations were derived separately for the cold and warm halves of the year, which in turn were divided into two halves. Equation (1) gives the forecast of the deviations of the mean monthly values of the index from the norm in the month following the initial month, and calculation by Eq. (2) gives the forecast for the next month, or the forecast of the zonal index with a 30-day length of time before the forecasting of the phenomenon occurs. An analysis of the data showed that the proposed method of extrapolation makes it possible to precalculate the intensity of zonal circulation at the mean level of the troposphere with a satisfactory guarantee. Thus, precalculation of the index can be used when compiling monthly forecasts by theoretical methods. Orig. art. has: 5 formulas, and 1 table and 2 figures.

SUB CODE: 04/ SUBM DATE: none/ ORIG REF: 007

kh

Card 2/2

"APPROVED FOR RELEASE: Thursday, September 26, 2002 CIA-RDP86-00513R002065710007-3
APPROVED FOR RELEASE: Thursday, September 26, 2002 CIA-RDP86-00513R002065710007-3"

ZVEREV, N.I.; ZVEREVA, Ye.P.

Statistical analysis of the effect of various layers of the troposphere on changes of pressure at the earth's surface. Trudy TSIP no.139:59-66 '65. (MIRA 18:6)

"APPROVED FOR RELEASE: Thursday, September 26, 2002 CIA-RDP86-00513R002065710007-3
APPROVED FOR RELEASE: Thursday, September 26, 2002 CIA-RDP86-00513R002065710007-3"

ZVEREV, N.I., kand. tekhn. nauk; KISEL'GOF, M.L., kand. tekhn. nauk

Comparison of the efficiency of coal dust cyclones. Elek. sta. 35 no.12:6-8 D '64. (MIRA 18:2)

"APPROVED FOR RELEASE: Thursday, September 26, 2002 CIA-RDP86-00513R002065710007-3
APPROVED FOR RELEASE: Thursday, September 26, 2002 CIA-RDP86-00513R002065710007-3"

BAGROV, N.A.; VASYUKOV, K.A.; ZVEREV, N.I.; PED', D.A.

Principle of analogy and its use in practical work. Trudy TSIP no.132:41-47 '64. (MIRA 17:10)

"APPROVED FOR RELEASE: Thursday, September 26, 2002 CIA-RDP86-00513R002065710007-3
APPROVED FOR RELEASE: Thursday, September 26, 2002 CIA-RDP86-00513R002065710007-3"

VASYUKOV, K.A.; ZVEREV, N.I.; PED', D.A.

Forecasting the anomaly of the average monthly air temperature.
Trudy TSIP no.132:59-63 '64. (MIRA 17:10)

"APPROVED FOR RELEASE: Thursday, September 26, 2002 CIA-RDP86-00513R002065710007-3
APPROVED FOR RELEASE: Thursday, September 26, 2002 CIA-RDP86-00513R002065710007-3"

ZVEREV, N.I.

Use of hydrodynamic analogy for weather forecasting. Trudy TSIP no.13:64-74 '64. (MIRA 17:10)

"APPROVED FOR RELEASE: Thursday, September 26, 2002 CIA-RDP86-00513R002065710007-3
APPROVED FOR RELEASE: Thursday, September 26, 2002 CIA-RDP86-00513R002065710007-3"

ZVEREV, N.I.

Waves in the atmosphere. Trudy TSIP no.135:63-90 '64
(MIRA 17:8)

"APPROVED FOR RELEASE: Thursday, September 26, 2002 CIA-RDP86-00513R002065710007-3
APPROVED FOR RELEASE: Thursday, September 26, 2002 CIA-RDP86-00513R002065710007-3"

ZVEREV, N.I., kand. tekhn. nauk; IGNAT'YEV, V.I., kand. tekhn. nauk

Precipitation of aerosol particles on a cylinder in the presence of a temperature gradient of the media. Teploenergetika 10 no.11:38-39 N '63. (MIRA 17:1)

1. Vsesoyuznyy teplotekhnicheskiy institut.

"APPROVED FOR RELEASE: Thursday, September 26, 2002 CIA-RDP86-00513R002065710007-3
APPROVED FOR RELEASE: Thursday, September 26, 2002 CIA-RDP86-00513R002065710007-3"

ZVEREV, N.I., kand.tekhn.nauk; IGNAT'YEV, V.I., kand.tekhn.nauk

Steam-blast cleaning of sticky flue ashes in order to prevent the unbalancing of flue gas pumps. Elek.sta. 33 no.12:74-76 D '62. (MIRA 16:2)

(Boilers--Cleaning)

"APPROVED FOR RELEASE: Thursday, September 26, 2002 CIA-RDP86-00513R002065710007-3
APPROVED FOR RELEASE: Thursday, September 26, 2002 CIA-RDP86-00513R002065710007-3"

LUZHNOV, G.I., inzh.; ZVEREV, N.I., kand.tekhn.nauk; GAVRILOV, A.F., inzh.; PIGALEV, V.P., inzh.

Pneumatic transportation of shot in boiler systems and methodology for its designing. Elek.sta. 33 no.11:12-19 N '62. (MIRA 15:12)

(Boilers)

"APPROVED FOR RELEASE: Thursday, September 26, 2002 CIA-RDP86-00513R002065710007-3
APPROVED FOR RELEASE: Thursday, September 26, 2002 CIA-RDP86-00513R002065710007-3"

LUSHNOV, G.I., inzh.; ZVEREV, N.I., kand.tekhn.nauk; GAVRILOV, A.F., inzh.

Experimental determination of resistance coefficients in the pneumatic transportation of pig iron shot. Teploenergetika 8 no.1:15-18 Ja '61. (MIRA 14:4)

1. Vsesoyuznyy teplotekhnicheskiy institut.
(Boilers—Cleaning) (Pneumatic-tube transportation)

"APPROVED FOR RELEASE: Thursday, September 26, 2002 CIA-RDP86-00513R002065710007-3
APPROVED FOR RELEASE: Thursday, September 26, 2002 CIA-RDP86-00513R002065710007-3"

IGNAT'YEV, V.I., kand.tekhn.nauk; ZVEREV, N.I., kand.tekhn.nauk

Flow of dusty gas around a cylinder. Teploenergetika 8 no.3: 13-16 Mr '61. (MIRA 14:9)

1. Vsesoyuznyy teplotekhnicheskiy institut.
(Gas flow)

"APPROVED FOR RELEASE: Thursday, September 26, 2002 CIA-RDP86-00513R002065710007-3
APPROVED FOR RELEASE: Thursday, September 26, 2002 CIA-RDP86-00513R002065710007-3"

ZVEREV, N.I., kand.tekhn.nauk

Adjustment of MP_VTI ash traps. Elek.sta. 32 no.4:16-22 Ap '61.
(MIRA 14:7)

(Furnaces)

"APPROVED FOR RELEASE: Thursday, September 26, 2002 CIA-RDP86-00513R002065710007-3
APPROVED FOR RELEASE: Thursday, September 26, 2002 CIA-RDP86-00513R002065710007-3"

IGNAT'YEV, V.I., insh.; ZVEREV, N.I., kand.tekhn.nauk

Laboratory air separator with a boiling layer. Teploenergetika 7 no.2:55-58 F '60. (MIRA 13:5)

1. Vsesoyuznyy teplotekhnicheskiy institut.
(Separators (Machines))

APPROVED FOR RELEASE: Thursday, September 26, 2002 CIA-RDP86-00513R002065710007-3
APPROVED FOR RELEASE: Thursday, September 26, 2002 CIA-RDP86-00513R002065710007-3"

IGNAT'IEV, V.I., inzh.; ZVEREV, M.I., kand. tekhn.nauk.

Flow of a dust-air mixture around a cylinder. Teploenergetika 5 no.3: 36-40 Mr '58. (MIRA 11:4)

1. Vsesoyuznyy teploetekhnicheskiy institut.
(Aerodynamics)

"APPROVED FOR RELEASE: Thursday, September 26, 2002 CIA-RDP86-00513R002065710007-3
APPROVED FOR RELEASE: Thursday, September 26, 2002 CIA-RDP86-00513R002065710007-3"

IGNAT'YEV, V.I.; ZVEREV, N.I.

Settling of aerosol particles on a cylinder. Inzh.-fiz. zhur. no.12:17-23 D '60. (MIRA 14:3)

1. Vsesoyuznyy teplotekhnicheskiy institut im. F.E. Dzerzhinskogo, g. Moskva.

(Aerosols)

"APPROVED FOR RELEASE: Thursday, September 26, 2002 CIA-RDP86-00513R002065710007-3
ZVERE"APPROVED FOR RELEASE: Thursday, September 26, 2002 CIA-RDP86-00513R002065710007-3"

The Storm Wind of 14 November 1952 in the South of the European Territory of the USSR. Meteorol. i gidrologiya, No 6, 1953, pp 3-7

In the southeastern European part of the USSR from 9 to 14 November 1952 wind strengths up to 28-34 meters/second were observed. The author discussed the variation of the wind regime during this period. For each day he constructs the charts of wind velocity for the ground level and for the altitude 300, 600, and 900 meters above the level of the ground. The storm arose as the result of intense dropping pressure in the lower kilometer layer, which transferred the momentum from top to bottom with the simultaneous advection of cold masses from the northeast. (RZhGeol, No 5, 1954)

SO: Sum. No. 568, 6 Jul 55

"APPROVED FOR RELEASE: Thursday, September 26, 2002 CIA-RDP86-00513R002065710007-3
APPROVED FOR RELEASE: Thursday, September 26, 2002 CIA-RDP86-00513R002065710007-3"

ZVEREV, N.I., kandidat fiziko-matematicheskikh nauk

Meteorological works of the Russian geophysicist I.N.Smirnov.
Meteor.i gidrol. no.5:56-57 My '53. (MIRA 8:9)

1. TSentral'nyy institut profsoyuzov, Moskva.
(Smirnov, Ivan Nikolaevich)

"APPROVED FOR RELEASE: Thursday, September 26, 2002 CIA-RDP86-00513R002065710007-3
APPROVED FOR RELEASE: Thursday, September 26, 2002 CIA-RDP86-00513R002065710007-3"

ZVEREV, N.I., kandidat fiziko-matematicheskikh nauk

Temperature forecast. Meteor.i gidrol. no.2:28-29 Mr-Ap '55.
(Atmospheric temperature)
(MLRA 8:7)

APPROVED FOR RELEASE: Thursday, September 26, 2002 CIA-RDP86-00513R002065710007-3
APPROVED FOR RELEASE: Thursday, September 26, 2002 CIA-RDP86-00513R002065710007-3"

ZVEREV, N. I.

AID P - 1864

Subject : USSR/Meteorology and Hydrology

Card 1/1 Pub. 71-a - 7/26

Author : Zverev, N. I.

Title : On temperature forecasting

Periodical : Met. i gidro., no.2, 28-29, 1955

Abstract : The article is an attempt to establish with equations and charts the role played by turbulence in the moving of warm air. One table and 2 charts are given.

Institution : None

Submitted : No date

"APPROVED FOR RELEASE: Thursday, September 26, 2002 CIA-RDP86-00513R002065710007-3
APPROVED FOR RELEASE: Thursday, September 26, 2002 CIA-RDP86-00513R002065710007-3"

SOV/ 124-58-5-5563

Translation from: Referativnyy zhurnal, Mekhanika, 1958, Nr 5, p 91 (USSR)

AUTHOR: Zverev, N. I.

TITLE: On the Influence of the Temperature Field of the Continent and the Ocean during the Warm Season Upon the Atmospheric Circulation in the Far East (O vliyanii temperaturnogo polya kontinenta i okeana v teploye vremya goda na atmosfernuyu tsirkulyatsiyu v usloviyakh Dal'nego Vostoka)

PERIODICAL: Tr. Tsentr. in-ta prognozov, 1957, Nr 49, pp 250-263

ABSTRACT: Bibliographic entry
1. Atmosphere--Motion 2. Oceans--Thermal effects
3. Earth--Thermal effects 4. Climatic factors--Asia

Card 1/1

"APPROVED FOR RELEASE: Thursday, September 26, 2002 CIA-RDP86-00513R002065710007-3
ZVEREV "APPROVED FOR RELEASE: Thursday, September 26, 2002 CIA-RDP86-00513R002065710007-3"

in book -
Problems in Long-range Forecasting Leningrad, Gidrometeoizdat, 1957.

Zverev, N.I. Influence of Ocean and Land Temperature on Atmospheric Circulation During the Warm Season in the Far East 250

The author analyzes the influence of thermal nonuniformity of the surface layer on the atmospheric circulation and discusses some implications from observation results pertinent to weather forecasting. The author defines nonuniformity as the phenomenon of the accumulation of heat in the surface layer and the unequal distribution of this heat in latitudinal and meridional directions. The article consists of two chapters. One examines the formation of temperature contrasts between ocean and land and the other examines the question of periodicity, i.e., the existence of definite natural temperature intervals (from 6 to 12 days), and the connection of such periods with temperatures of the near-surface air layer. The subject of temperature variation was studied by personnel of the long-term forecast division of the Far Eastern Scientific Research Institute of Hydrometeorology (DV NIGMI), The Institute

Card 8/10

APPROVED FOR RELEASE: Thursday, September 26, 2002 CIA-RDP86-00513R002065710007-3
APPROVED FOR RELEASE: Thursday, September 26, 2002 CIA-RDP86-00513R002065710007-3"

Problems in Long-range Forecasting

compiled daily temperature maps for sea and land in 1934-38. In addition, the author availed himself of the material collected in the archives of the Central Institute of Forecasts (TSIP). There are 12 maps, 6 tables, and 8 Soviet references.

Byalynitskaya, V.G., and Ped', D.A. Formation of Night Frosts in Ukraine 264

The authors place night frosts in Ukraine into the category of those that are dangerous, i.e., capable of damaging crops. This type of frosts is common both in autumn and in spring, but the authors analyze only the occurence of frosts in May. Crimea is included in this study. Tabular material includes statistics of occurrence and duration of frosts. The article analyzes the thermobaric field during the occurrence of frosts and compares it with the field when frost is absent. Pertinent

Card 9/10

"APPROVED FOR RELEASE: Thursday, September 26, 2002 CIA-RDP86-00513R002065710007-3
APPROVED FOR RELEASE: Thursday, September 26, 2002 CIA-RDP86-00513R002065710007-3"

indices are deduced and data given on how to forecast the onset of frosts one to two days in advance. There are 13 tables in the text and 2 in the appendix, 8 maps, 2 drawings, and 16 references, of which 14 are Soviet and 2 are English.

AVAILABLE: Library of Congress

MM /ksv
8-12-58

Card 10/10

APPROVED FOR RELEASE: Thursday, September 26, 2002 CIA-RDP86-00513R002065710007-3

JPRS: L-1078-N

CSO: 2965-N

PROGRESS-REPORT SESSION OF THE SCIENTIFIC COUNCIL
OF THE CENTRAL INSTITUTE OF FORECASTS
[A Translation]

5451151 [illegible]

N. I. Everev

Meteorologiya i Gidrologiya
[Meteorology and Hydrology],
No 5, 1959, pp 61-62

From 12 to 20 January 1959, in the Central Institute of Forecasts, a session of the Institute's Scientific Council was held to report on the fulfillment of its plan of scientific research work.

Three reports received attention at the Agricultural Meteorology Section of the Scientific Council.

3901180 [illegible]

L. A. Razumova and S. B. Mastinskaya described the results of three-year experimental studies conducted by a large team of researchers on the formation of the reserves of soil moisture, and the relationship between the state of spring wheat and corn and the water-supply conditions on virgin lands - in the steppe regions of Kulunda and the northern half of Kazakhstan.

The direct participants in the development of this theme included S. B. Mastinskaya, N. B. Meshchkhinova, Th. S. Mel'nik, N. A. Baybayeva, and others. Other participants were researchers from the Kazakh Scientific Research Hydrometeorological Institute, the Novosibirsk Biological Institute, the Kazakh Institute imeni Williams, the Kazakh Institute of Grain Management, and the workers of rural weather stations.

The problems broached by the lecturers roused a lively exchange of opinions. A monograph presented as a summation was approved, and the conclusions thus arrived at were acknowledged to be concrete, and valuable in practice.

The report of B. P. Ponomarev touched upon the problems of evaluating the agrometeorological conditions of the growth of spring wheat on the territory of the RSFSR. The lecturer's conclusions were inferred on the basis of experimental (laboratory and field) researches and thematic observations by a large number of

SO: OTS, Dept of Commerce, OTS:60-11,042, JPRS L-1078-N, 19 Nov 59, Uncl.

"APPROVED FOR RELEASE: Thursday, September 26, 2002 CIA-RDP86-00513R002065710007-3
APPROVED FOR RELEASE: Thursday, September 26, 2002 CIA-RDP86-00513R002065710007-3"

team's intensive labors resulted in the successful creation of a method which, although inherently synoptic, is based on definite theoretical premises. Following an extensive discussion, in the course of which many valuable comments and suggestions were voiced, this study was approved.

The writer of the present communication, moreover, presented a report of "Forecasting Precipitation for 24, 46 and 72 Hours in Advance for the Central Region of European USSR." Here the forecasting methods are based on equations of multiple regression. The Section's resolution pointed to the expediency of promoting statistical research in the field of the development of methods of long-range weather forecasting.

V. G. Shishkov reported on the results of tests of various methods of compiling monthly weather forecasts. On the basis of obtained data, the lecturer singled out the methods and procedures that can be operatively introduced in the Forecasting Service. Discussion turned attention to the expediency of continuing on a still broader scale these tests of various methods of compiling monthly weather forecasts.

Those participating in the Session's activities included representatives of the Main Administration of Hydrometeorological Service and a number of scientific research institutes (KAZNIIGMI /the Kazak Scientific Research Hydrometeorological Institute/, SV NIGMI, NIIAK, the Institute of Soil Science imeni Pokuchayev in the Academy of Sciences USSR, the Agricultural Academy imeni Timiryasev, and others). The session was attended by the Chinese meteorologists present in Moscow.

END

1786

"APPROVED FOR RELEASE: Thursday, September 26, 2002 CIA-RDP86-00513R002065710007-3
APPROVED FOR RELEASE: Thursday, September 26, 2002 CIA-RDP86-00513R002065710007-3"

3(7)
AUTHOR: Zverev, N. I.

TITLE: Final Meeting of the Scientific Council of the Central Institute of Prognosis (Itogovaya sessiya Uchenogo soveta Tsentral'nogo instituta prognozov)

PERIODICAL: Meteorologiya i gidrologiya, 1959, Nr 5, pp 61 - 62 (USSR)

ABSTRACT: On January 12-20, 1959, a meeting of the Scientific Council took place at the Tsentral'nyy institut prognozov (Central Institute of Prognosis). It was dedicated to the final results in the fulfilment of the plan for scientific research work. 3 reports were delivered in the Agrometeorological Section of the Scientific Council. L. A. Razumova and S. B. Mastinskaya put forward the results of the three-year experimental work at which the formation of ground humidity reserves and the correlation between the state of the summer wheat and corn and the water supply in the newly won land (the steppe areas of the Kulunda Steppe and of northern Kazakhstan) were investigated. S. B. Mastinskaya, N. B. Meshchaninova, Yu. S. Mel'nik, N. A. Baybayeva et al participated directly in the working out of this subject. Co-workers of the

APPROVED FOR RELEASE: Thursday, September 26, 2002 CIA-RDP86-00513R002065710007-3
APPROVED FOR RELEASE: Thursday, September 26, 2002 CIA-RDP86-00513R002065710007-3"

Final Meeting of the Scientific Council of the Central Institute of Prognosis

following organizations took part in the investigations: Kazakhskiy nauchno-issledovatel'skiy gidrometeorologicheskiy institut (Kazakh Hydrometeorological Scientific Research Institute), Novosibirskiy biologicheskiy institut (Novosibirsk Biological Institute), Kazakhskiy institut im. Vil'yamsa (Kazakh Institute imeni Vil'yams), Kazakhskiy institut zernovogo khozyaystva (Kazakh Institute of Grain Economy), as well as the co-workers of the agrometeorological stations. B. P. Ponomarev spoke on the evaluation of agrometeorological conditions for the growth of summer wheat in the area of the RSFSR. 7 reports were delivered in the Hydrological Section of the Scientific Council. The most important results were obtained by V. D. Komarov, A. N. Vazhnov, and A. I. Karakash. V. N. Parshin and Ye. G. Popov worked out a new method for the evaluation of hydrological forecasts. A. I. Afanas'yev presented conclusions on the features of the decay of the snow cover on the basis of an interpretation of aerial photographs during the melting of snow. 7 reports were delivered in the Meteorological Section. F. I. Monakhov put forward the results of experimental investiga-

September 26, 2002 CIA-RDP86-00513R002065710007-3
Thursday, September 26, 2002 CIA-RDP86-00513R002065710007-3"

Final Meeting of the Scientific Council of the [illegible]
Institute of Prognosis

tions for the determination of cyclones on the high seas by means of microseismic recording. N. P. Luzhnaya reported on the test results of the method used for forecasts of the daily temperature by O. P. Glazova, and of the method used for wind forecasts in high altitudes by A. D. Chistyakov. N. G. Leonov reported on the features of circulation above the Antarctic zone. Yu. V. Khrabrov presented the results of work of a group of collaborators in working out a new method of weather forecasts for 3-7 days. N. I. Zverev delivered a report on "The Forecast of Precipitations for 24, 46 and 72 Hours in the Central Part of the European Area of the USSR". V. G. Shishkov reported on the test results of various methods for the compilation of monthly weather forecasts. The Meeting was attended by representatives of the following authorities: Glavnoye upravleniye gidrometeosluzhby (Main Administration of the Hydrometeorological Service), Kaz-NIGMI, DV NIGMI, NIIAK, Institut pochvovedeniya im. Dokuchayeva AN SSSR (Institute of Soil Science imeni Dokuchayev of the AS USSR), Sel'skokhozyaystvennaya akademiya im

Card 3/4

"APPROVED FOR RELEASE: Thursday, September 26, 2002 CIA-RDP86-00513R002065710007-3
APPROVED FOR RELEASE: Thursday, September 26, 2002 CIA-RDP86-00513R002065710007-3"

Final Meeting of the Scientific Council of the Central Institute of Prognosis SOV/50-59-5-20/22

Timiryazeva (Agricultural Academy imeni Timiryazev). Besides, Chinese meteorologists staying in Moscow were present.

Card 4/4

APPROVED FOR RELEASE: Thursday, September 26, 2002 CIA-RDP86-00513R002065710007-3
APPROVED FOR RELEASE: Thursday, September 26, 2002 CIA-RDP86-00513R002065710007-3"

3(7) PHASE I BOOK EXPLOITATION SOV/3249

Moscow. Tsentral'nyy Institut prognozov

Voprosy dolgosrochnykh prognozov pogody (Problems in Long-Range Weather Forecasting) Moscow, Gidrometeoizdat (otd.), 1959. 62 p. (Series: Its: Trudy, vyp. 85) Errata slip inserted. 900 copies printed.

Sponsoring Agency: USSR. Sovet ministrov. Glavnoye upravleniye gidrometeorologicheskoy sluzhby.

Ed. (Title page): G. I. Morskiy; Ed. (Inside book): L. V. Blinnikov; Tech. Ed.: T. Ye. Zemtsova.

PURPOSE: This issue of the Institute's Transactions is intended for scientific research and field workers in meteorology as well as for advanced students in schools of higher education.

COVERAGE: This is a collection of three articles in synoptic and general meteorology. Two of the articles deal with problems concerning the general circulation of the atmosphere while the third discusses the matter of forecasting mean 7-day pressure maps. References accompany each article.

Card 1/3

"APPROVED FOR RELEASE: Thursday, September 26, 2002 CIA-RDP86-00513R002065710007-3
APPROVED FOR RELEASE: Thursday, September 26, 2002 CIA-RDP86-00513R002065710007-3"

TABLE OF CONTENTS:

Bayev, V. K. On the Theory of the General Circulation of the Atmosphere
The author attempts a theoretical description of the general circulation in the most general statement of the problem. This entails, first of all, the consideration of nonlinear and viscosity members in differential equations, and also the consideration of the nonadiabatic effects which play a basic role in the general circulation of the atmosphere. This work differs from others on the problem insofar as the author pays stricter attention to the dependence of the thermal properties of the underlying surface on geographic coordinates. Computations are introduced to show that temperature in time and space as well as all elements of motion may be determined when the initial distribution of meteorological elements and the heat influx from the Sun, as a function of time, are known. There are 4 references: 3 Soviet and 1 English. 3

Zverev, N. I. Forecasting a Mean AT 500 Seven-day Chart
Since most extended forecasts do not deal with weather conditions to be expected in the week immediately following the date of chart compilation, the author presents a statistical method of compiling mean 7-day charts. The author works on the basic premise that the development of synoptic processes in the future is completely determined by the history of synoptic processes over a given region. There are 7 references: 4 Soviet and 3 English. 27

"APPROVED FOR RELEASE: Thursday, September 26, 2002 CIA-RDP86-00513R002065710007-3
APPROVED FOR RELEASE: Thursday, September 26, 2002 CIA-RDP86-00513R002065710007-3"

ZVEREV, N.I.

Forecasting the mean seven-day topographic map of the 500 millibar absolute isobaric surface. Trudy TSIP no.85:27-39 '59. (MIRA 12:8)

(Atmospheric pressure)

"APPROVED FOR RELEASE: Thursday, September 26, 2002 CIA-RDP86-00513R002065710007-3
APPROVED FOR RELEASE: Thursday, September 26, 2002 CIA-RDP86-00513R002065710007-3"

ZVEREV, N.I.

Statistical method of preparing one- to three-day precipitation forcasts during the cold half-yearly period for the central area of the European part of the U.S.S.R. Trudy TSIP no.97:47-66 '60. (MIRA 14:3)

(Weather forcasting)

"APPROVED FOR RELEASE: Thursday, September 26, 2002 CIA-RDP86-00513R002065710007-3
APPROVED FOR RELEASE: Thursday, September 26, 2002 CIA-RDP86-00513R002065710007-3"

ZVEREV, N.I.; PED', D.A.

Determining the degree of analogy between fields of meteorological elements by the use of the "Pogoda" electronic computer. Meteor. i gidrol. no.10:14-18 O '60. (MIRA 13:10)
(Weather forecasting) (Electronic calculating machines)

"APPROVED FOR RELEASE: Thursday, September 26, 2002 CIA-RDP86-00513R002065710007-3
APPROVED FOR RELEASE: Thursday, September 26, 2002 CIA-RDP86-00513R002065710007-3"

ZVEREV, N.I.; MORSKOY, G.I.

Analyzing the interaction of the atmosphere and the hydrosphere.
Meteor.i gidrol. no.5:37-41 My '61. (MIRA 14:4)
(Atlantic Ocean--Ocean temperature)
(Europe, Western--Atmospheric temperature)

"APPROVED FOR RELEASE: Thursday, September 26, 2002 CIA-RDP86-00513R002065710007-3
APPROVED FOR RELEASE: Thursday, September 26, 2002 CIA-RDP86-00513R002065710007-3"

BAGROV, N.A.; ZVEROV, N.I.

Method of forecasting the H_{500} geopotential field for mean terms. (MIRA 14:5)
Trudy TSIP no.108:3-22 '61.
(Weather forecasting)

"APPROVED FOR RELEASE: Thursday, September 26, 2002 CIA-RDP86-00513R002065710007-3
APPROVED FOR RELEASE: Thursday, September 26, 2002 CIA-RDP86-00513R002065710007-3"

VASYUKOV, K.A.; ZVEREV, N.I.; PED', D.A.

Use of the analogy principle in prognoses of synoptic processes and the weather for five days. Trudy TSIP no.116:13-23 '62. (MIRA 15:5)

(Weather forecasting)

"APPROVED FOR RELEASE: Thursday, September 26, 2002 CIA-RDP86-00513R002065710007-3
APPROVED FOR RELEASE: Thursday, September 26, 2002 CIA-RDP86-00513R002065710007-3"

VASYUKOV, K.A.; ZVEREV, N.I.; PED', D.A.

Forecasting synoptic processes for the current natural synoptic period by the use of analogues. Meteor. i gidrol. no.1:27-33 Ja '62. (MIRA 15:1)

(Statistical weather forecasting)

APPROVED FOR RELEASE: Thursday, September 26, 2002 CIA-RDP86-00513R002065710007-3
APPROVED FOR RELEASE: Thursday, September 26, 2002 CIA-RDP86-00513R002065710007-3"

S/169/62/000/007/109/149
D228/D307

AUTHORS: Vasyukov, K. N., Zverev, N. I. and Ped', D. A.

TITLE: Using the principle of analogousness when forecasting synoptic prccesses and the weather for five days

PERIODICAL: Referativnyy zhurnal, Geofizika, no. 7, 1962, 48, abstract 7B257 (Tr. Tsentr. in-ta prognozov, no. 116, 1962, 13-23)

TEXT: The N-500 values for a standard grid of points, located every 4° of latitude and 12° of longitude on the territory, bounded by 36°W, 84°E, 76°N, and 36°W, were taken from the average maps for natural synoptic processes (NSP) in January and February, 1938-1955. After this the signs of the geopotential differences, respectively characterizing the zonal and the meridional flow components, were determined for meridionally and latitudinally neighboring points. The values +1, 0, and -1 were respectively ascribed to positive, zero and negative differences. The resulting magnitudes of the meridional and the zonal wind components for all NSP were

Card 1/4

"APPROVED FOR RELEASE: Thursday, September 26, 2002 CIA-RDP86-00513R002065710007-3
"APPROVED FOR RELEASE: Thursday, September 26, 2002 CIA-RDP86-00513R002065710007-3"

Using the principle ...

printed on tape. The analogs of the N-500 averages for the parameters ρ_φ and ρ_λ, characterizing the similarity of fields with respect to their circulational features, were selected for the first 20 maps by means of the electronic computer "Pogoda". The values of ρ_φ and ρ_λ were calculated from the formulas:

$$\rho_\varphi = \frac{n_{\varphi+} - n_{\varphi-}}{n_{\varphi+} + n_{\varphi-}}, \qquad \rho_\lambda = \frac{n_{\lambda+} - n_{\lambda-}}{n_{\lambda+} + n_{\lambda-}}$$

where $n_{\varphi+}$, $n_{\varphi-}$, $n_{\lambda+}$, $n_{\lambda-}$ is the number of cases when the signs of the meridional (n_φ) and the zonal (n_λ) flow components in two comparable N-500 fields of NSP do, or do not, coincide. The comparison of all NSP with the original 20 allowed the distribution of the degree of analogy for the fields of the 500-mb surface's January geopotential to be obtained from the parameters of o_φ and o_λ. It also

"APPROVED FOR RELEASE: Thursday, September 26, 2002 CIA-RDP86-00513R002065710007-3
APPROVED FOR RELEASE: Thursday, September 26, 2002 CIA-RDP86-00513R002065710007-3"

Using the principle ...

allowed the natural frequency of analogous processes to be exposed separately according to the development of the meridional and the zonal air-flow components. Utilizing the criterion ρ_φ all processes can be divided according to their degree of analogy into three categories: the analog ($\rho_\varphi \geq 0.4$), the non-analog ($\rho_\varphi = -0.3, +0.4$), and the reverse analog ($\rho_\varphi \leq -0.3$). Utilizing the criterion ρ_λ, too, we will obtain the analog $\rho_\lambda \geq 0.8$, the non-analog $\rho_\lambda = 0.2 + 0.8$, and the reverse analog $\rho_\lambda \leq 0.2$. The criteria are established with a 10% guaranty. In practical work, when classifying all processes into three categories, the degree of guaranty should be established jointly according to both criteria for the analog $\rho_\varphi \geq 0.4$ and $\rho_\lambda \geq 0.6$, the non-analog $-0.3 < \rho_\varphi < 0.4$ and $0.2 < \rho_\lambda < 0.6$, and the reverse analog $-\rho_\varphi \leq 0.3$ and $\rho_\lambda < 0.2$. Average estimates are given for the analogousness of subsequent pairs of NSP in relation to the degree of analogy of the original pairs of NSP with respect to ρ_φ

Card 3/4

"APPROVED FOR RELEASE: Thursday, September 26, 2002 CIA-RDP86-00513R002065710007-3
APPROVED FOR RELEASE: Thursday, September 26, 2002 CIA-RDP86-00513R002065710007-3"

Using the principle ...

and $\rho_{\xi} = \rho_{\varphi} + \rho_{\lambda}$. As the geometric likeness increases, the analogousness in the development of atmospheric processes in subsequent NSP grows generally. But in a number of examples it is shown, too, that the factor of geometric analogy, though it is of great significance in establishing the analogousness of atmospheric processes, does not always give practically valuable pointers to the future development of processes. In some cases originally similar processes subsequently change into non-analogs. Using modern computers it is possible by means of the analogy parameters of ρ_{φ}, ρ_{λ}, and $\rho_{\xi} = \rho_{\varphi} + \rho_{\lambda}$ to take into account objectively the development history of atmospheric processes, to solve problems connected with the choice of analogs, and so forth, which is necessary in order to forecast the weather for 3 - 7 days. [Abstracter's note: Complete translation.]

Card 4/4

"APPROVED FOR RELEASE: Thursday, September 26, 2002 CIA-RDP86-00513R002065710007-3
APPROVED FOR RELEASE: Thursday, September 26, 2002 CIA-RDP86-00513R002065710007-3"

S/169/62/000/007/110/149
D228/D307

AUTHORS: Vasyukov, K. N., Zverev, N. I. and Ped', D. A.

TITLE: Application of empirical functions of influence for forecasting mean monthly air temperature anomalies

PERIODICAL: Referativnyy zhurnal Geofizika, no. 7, 1962, 48-49, abstract 7B258 (Tr. Tsentr. in-ta prognozov, no. 116, 1962, 24-33)

TEXT: Particular synchronous and asynchronous (December-January, June-July) factors of correlation between the Moscow air temperature and the temperature (pressure) at a number of points were determined for January and July in order to investigate the influence of centers of atmospheric action (CAA) on the formation of mean monthly air temperature anomalies in the USSR's European territory and in order to derive possible prognostic relations (by preparing the equation of multiple regression). These points were chosen for the characteristic of the intensity of CAA and were located as follows: Ponta Delgada (Azores), Honolulu (Hawaiian Islands), Be-

"APPROVED FOR RELEASE: Thursday, September 26, 2002 CIA-RDP86-00513R002065710007-3
APPROVED FOR RELEASE: Thursday, September 26, 2002 CIA-RDP86-00513R002065710007-3"

Application of empirical ...

ruferdur (Iceland), Irkutsk, Tashkent, and Petropavlovsk na Kamchatka. The correlative connections between the elements under consideration (all instances of air temperature and pressure anomalies over 50 years were taken into account) are small. The highest stability (for synchronous relations) is observed between the advection of the Azores anticyclone and the mean monthly temperature anomaly at Moscow. The relations obtained appear more distinctly in cases of greater temperature or pressure deviations at CAA, selected from all the 50-year data. Magnitudes are given for synchronous and asynchronous relations between the mean monthly air temperature anomalies at Moscow and the CAA, and between the mean monthly air temperature anomalies at Moscow and the mean monthly pressure anomalies at the CAA; values are cited, too, for the synchronous relations of the mean monthly Moscow air-temperature anomalies to the pressure anomaly differences between the main CAA. When allowance is made for the state at two CAA, the asynchronous relations between the mean monthly air temperature anomalies at Moscow and the pressure at the CAA are somewhat better than if just one CAA is taken into account. Allowance is made for the sim-

"APPROVED FOR RELEASE: Thursday, September 26, 2002 CIA-RDP86-00513R002065710007-3
APPROVED FOR RELEASE: Thursday, September 26, 2002 CIA-RDP86-00513R002065710007-3"

Application of empirical ...

ultaneous influence of all CAA by means of empirical functions of influence. The problem is simplified by finding the asynchronous relations (with a month's displacement) between the state of some CAA, expressed by fluctuations in the mean monthly air temperature anomaly at Ponta Delgada, Beruferdur, Honolulu, Irkutsk, and Tashkent, and the mean monthly air temperature anomaly on the USSR's European territory according to the data of 11 stations for 1900-1940 (Arkhangel'sk, Leningrad, Syktyvkar, Riga, Moscow, Yelabuga, Orenburg, Zemetchino, Volgograd, Rostov-on-Don, Odessa). Allowance for the influence of CAA on the temperature conditions of the USSR's European territory was made by dividing all the original data into warm (April -September) and cold (October-March) periods, whose empirical functions of influence were determined separately. Coefficients of the empirical functions of influence are cited for each of the 11 points on the USSR's European territory; they were obtained on the grounds of the data's climatic processing. The values of the mean monthly air temperature anomaly (Δt) predictable for each point and month are calculated from the multiple regression equation : $\Delta t = \alpha_0 \Delta t_0 + \alpha_1 \Delta t_1 + \alpha_2 \Delta t_2 + \alpha_3 \Delta t_3 + \alpha_4 \Delta t_4$.

Card 3/4

"APPROVED FOR RELEASE: Thursday, September 26, 2002 CIA-RDP86-00513R002065710007-3
APPROVED FOR RELEASE: Thursday, September 26, 2002 CIA-RDP86-00513R002065710007-3"

Here α_0, α_1, α_2, α_3, α_4 are the respective coefficients of the empirical functions of influence for a given station on the USSR's European territory and for the stations of each of the four CAA: the Azores and Honolulu highs, the Iceland low [Abstracter's note: It is assumed that 'nelandskoy' should read 'islandskoy'], the Siberian high for the cold season, and the Mid-Asiatic low for the warm season. Δt_0, Δt_1, Δt_2, Δt_3, Δt_4 are the respective mean monthly air temperature anomalies at the same points for the preceding month. 18 out of 22 of the forecasts for the mean monthly air temperature anomaly were proved to be correct. 23 references. [Abstracter's note: Complete translation.]

APPROVED FOR RELEASE: Thursday, September 26, 2002 CIA-RDP86-00513R002065710007-3
APPROVED FOR RELEASE: Thursday, September 26, 2002 CIA-RDP86-00513R002065710007-3"

S/169/62/000/007/111/149
D228/D307

AUTHOR: Zverev, N. I.

TITLE: Forecasting the baric height field's evolution during 3 - 7 days

PERIODICAL: Referativnyy zhurnal, Geofizika, no. 7, 1962, 49, abstract 7B259 (Tr. Tsentr. in-ta prognozov, no. 116, 1962, 34-40)

TEXT: The author suggests a complex way of forecasting the evolution of the baric height field at the mean troposphere level for 3 - 7 days. The method contains the elements of theoretical and synoptic-statistical trends, from which ways of numerically forecasting the baric field for average periods are being currently developed. In accordance with G. I. Morskiy's theoretical model (Tr. Tsentr. in-ta prognozov, no. 49, 1957) the main equation is recorded in the form:

Card 1/3

APPROVED FOR RELEASE: Thursday, September 26, 2002 CIA-RDP86-00513R002065710007-3
APPROVED FOR RELEASE: Thursday, September 26, 2002 CIA-RDP86-00513R002065710007-3"

S/169/62/000/007/111/149
D228/D307

Forecasting the baric ...

$$\frac{\partial \Delta H}{\partial t} + \alpha_1 \frac{\partial H}{\partial t} + \alpha_2 \frac{\partial H}{\partial x} + \alpha_3 \Delta H + \alpha_4 (H \Delta H) = \varepsilon (x, y, t)$$

where H is the value of the N-500 geopotential; Δ is the Laplacian sign; $\alpha_1, \alpha_2, \alpha_3, \alpha_4$ are constants; and $\varepsilon (x, y, t)$ is the arbitrary function, allowing the factors not taken into account in the equation to be estimated statistically. This equation is linearized relative to a certain function $\bar{H}(x, y)$, which may in a particular case be considered as the field of the N-500 values of a natural synoptic period. The solution is made in the form of an analysis with respect to Chebyshev's polynomials, recorded in the form of a graded series, when $\bar{H}(x, y)$ is taken only in a first approximation as a second degree polynomial. Certain coefficients confronting different degrees of x and y were determined. Coefficients with younger degrees of x and y include time in a higher degree than those with older degrees. This testifies in particular that the influence of the indices of zonal and meridional transfer grows as

Card 2/3

"APPROVED FOR RELEASE: Thursday, September 26, 2002 CIA-RDP86-00513R002065710007-3
APPROVED FOR RELEASE: Thursday, September 26, 2002 CIA-RDP86-00513R002065710007-3"

S/169/62/000/007/111/149
D228/D307

the interval from the original day increases, and that the influence of indices, characterizing the development of smaller-scale disturbances, diminishes. The method allows the baric field's evolution throughout a natural synoptic period to be calculated on the basis of average AT-500 charts for the period's tendency, i.e. it enables a natural synoptic period's peculiarities to be taken into account. [Abstracter's note: Complete translation.]

"APPROVED FOR RELEASE: Thursday, September 26, 2002 CIA-RDP86-00513R002065710007-3
APPROVED FOR RELEASE: Thursday, September 26, 2002 CIA-RDP86-00513R002065710007-3"

VASYUKOV, K.A.; ZVEREV, N.I.; PED', D.A.

Application of empirical influence functions to prognoses of mean monthly air temperature anomalies. Trudy TSIP no.116:24-33 '62. (MIRA 15:5)

(Atmospheric temperature) (Weather forecasting)

...mber 26, 2002 CIA-RDP86-00513R002065710007-3
...day, September 26, 2002 CIA-RDP86-00513R002065710007-3"

S/169/62/000/007/112/149
D228/D307

AUTHORS: Duytseva, M. A. and Zverev, N. I.

TITLE: Possibility of applying L. Kletter's method of forecasting charts of the mean three-day N-850 values

PERIODICAL: Referativnyy zhurnal, Geofizika, no. 7, 1962, 49, abstract 7B260 (Tr. Tsentr. in-ta prognozov, no. 116, 1962, 65-66)

TEXT: The method, suggested by L. Kletter (Praktische Erfahrungen mit einer neuen Methode zur Ausarbeitung mittelfristiger Wetterprognosen, Arch. Meteorol., Geophys. und Bioklimatol. A, 1956, Bd. 9, H 2), was verified in conformity with the circulation conditions over the USSR's European territory. L. Kletter's method is based on the use of the linear regression equation, relating the mean three-day N-850 values to the values at 18 hrs on the initial day. For the USSR's European part the regression coefficients were determined by the method of least squares from the daily AT-850 charts for Moscow, Leningrad, Kiev, and Sverdlovsk for January and July,

Card 1/2

"APPROVED FOR RELEASE: Thursday, September 26, 2002 CIA-RDP86-00513R002065710007-3
APPROVED FOR RELEASE: Thursday, September 26, 2002 CIA-RDP86-00513R002065710007-3"

1950-1952. Out of 27 forecasts 15 proved to be correct in sign, the other 12 being incorrect. The method does not give the dynamics of the development of processes. The reason for the low justifiableness of the forecasts evidently consists of the fact that no adequate allowance is made for the regression equation's free term.
[Abstracter's note: Complete translation.]

"APPROVED FOR RELEASE: Thursday, September 26, 2002 CIA-RDP86-00513R002065710007-3
APPROVED FOR RELEASE: Thursday, September 26, 2002 CIA-RDP86-00513R002065710007-3"

VASYUKOV, K.A.; ZVEREV, N.I.; PED', D.A.

Correlation between the state of atmospheric pressure centers and the weather in the European part of the U.S.S.R. Trudy TSIP no.120:14-24 '63. (MIRA 16:6)

(Weather forecasting)

"APPROVED FOR RELEASE: Thursday, September 26, 2002 CIA-RDP86-00513R002065710007-3
APPROVED FOR RELEASE: Thursday, September 26, 2002 CIA-RDP86-00513R002065710007-3"

VASYUKOV, K.A.; ZVEREV, N.I.; PED', D.A.

Forecasting atmospheric processes by analogues for a natural synoptic period. Trudy TSIP no.120:3-13 '63. (MIRA 16:6)

(Weather forecasting)

"APPROVED FOR RELEASE: Thursday, September 26, 2002 CIA-RDP86-00513R002065710007-3
APPROVED FOR RELEASE: Thursday, September 26, 2002 CIA-RDP86-00513R002065710007-3"

ZVEREV, N.I.

Forecast of AT_{500} of the northern hemisphere for 3 to 5 days. Trudy TSIP no.120:44-48 '63. (MIRA 16:6)

(Weather forecasting)

"APPROVED FOR RELEASE: Thursday, September 26, 2002 CIA-RDP86-00513R002065710007-3
APPROVED FOR RELEASE: Thursday, September 26, 2002 CIA-RDP86-00513R002065710007-3"

ZVEREV, N.I.; PURGANSKAYA, I.P.

Practical methods of the expansion of the field of meteorological elements in respect to Chebyshev polynomials. Trudy TSIP no.123: 78-86 '63. (MIRA 16:9)

"APPROVED FOR RELEASE: Thursday, September 26, 2002 CIA-RDP86-00513R002065710007-3
APPROVED FOR RELEASE: Thursday, September 26, 2002 CIA-RDP86-00513R002065710007-3"

ZVEREV, N.I., kand.fiz.-matem.nauk

Analysis of the characteristics of zonal circulation. Meteor. i gidrol. no.2:36-40 F '64. (MIRA 17:5)

1. TSentral'nyy institut prognozov.

"APPROVED FOR RELEASE: Thursday, September 26, 2002 CIA-RDP86-00513R002065710007-3
APPROVED FOR RELEASE: Thursday, September 26, 2002 CIA-RDP86-00513R002065710007-3"

VASYUKOV, K.A., kand. fiz.-matem. nauk; ZVEREV, N.I., kand. fiz.-matem. nauk; PED', D.A., kand. geograf. nauk

Rhythms in the atmosphere and some methods of evaluating them. Meteor. i gidrol. no.1:47-49 Ja '65. (MIRA 18:2)

1. TSentral'nyy institut prognozov.

"APPROVED FOR RELEASE: Thursday, September 26, 2002 CIA-RDP86-00513R002065710007-3
APPROVED FOR RELEASE: Thursday, September 26, 2002 CIA-RDP86-00513R002065710007-3"

VASYUKOV, K.A.; ZVEREV, N.I.; PED', D.A.

Statistical method of forecasting the air temperature and the quantity of precipitation for a month. Trudy TSIP no.139:22-28 '65. (MIRA 18:6)

APPROVED FOR RELEASE: Thursday, September 26, 2002 CIA-RDP86-00513R002065710007-3
APPROVED FOR RELEASE: Thursday, September 26, 2002 CIA-RDP86-00513R002065710007-3

L 10406-67 EWT(1) IJP(c) AT SOURCE CODE: UR/2504/66/032/000/0020/0028

ACC NR: AT6033032

AUTHOR: Berezhetskiy, M. S.; Grebenshchikov, S. Ye.; Zverev, N. M.; Shpigel', I. S. 34

ORG: none

TITLE: Toroidal magnetic trap of the stellarator type with external injection of the plasma

SOURCE: AN SSSR. Fizicheskiy institut. Trudy, v. 32, 1966. Fizika plazmy (Plasma physics), 20-28

TOPIC TAGS: magnetic trap, plasma injection

ABSTRACT: The vacuum chamber of the magnetic trap under consideration was in the form of a torus with a diameter of 120 cm and a cross section diameter of 10 cm. A magnetic field of the stellarator type (without taking the toroidal character into account) has the following form:

$$\Phi = H_0 z + \frac{1}{\alpha}\sum_{k=0}^{\infty} H_p I_p(par)\sin p(\varphi - \alpha z), \qquad (1)$$

$$p = n(2k+1),$$

Card 1/2

APPROVED FOR RELEASE: Thursday, September 26, 2002 CIA-RDP86-00513R002065710007-3
APPROVED FOR RELEASE: Thursday, September 26, 2002 CIA-RDP86-00513R002065710007-3"

L 10406-67

ACC NR: AT6033032

where Φ is the scalar potential of the magnetic field; H_0 is the magnitude of the longitudinal field; H_p is the amplitude of the p-th harmonic of the helical field; r, φ, z are coordinates. There follows a mathematical development for the case of a helical field with n = 2. The article gives detailed mechanical drawings of several of the main features of the equipment used, including a cross section view of the apparatus, details of the helical winding, and a block diagram of the feeding system. A further figure shows an oscillogram of the current flowing through the winding. The experimental data confirm the validity of the approaah to the problem. "In conclusion the authors express their sincere thanks to M. S. Rabinovich for his continuing interest in the work and for his helpful discussions, as well as to Ye. P. Aleksandrov, V. I. Dudin, V. I. Kryykov, and V. P. Solov'yev who took part in the construction of the equipment, and to G. I. Os'kina who took part in the construction of the winding system." Orig. art. has: 5 formulas, 7 figures, and 1 table.

SUB CODE: 20/ SUBM DATE: none/ ORIG REF: 014/ OTH REF: 003

Card 2/2 bpp

"APPROVED FOR RELEASE: Thursday, September 26, 2002 CIA-RDP86-00513R002065710007-3
APPROVED FOR RELEASE: Thursday, September 26, 2002 CIA-RDP86-00513R002065710007-3"

BATANOV, G.M.; BEREZHETSKIY, M.S.; GREBENSHCHIKOV, S.Ye.; ZVEREV, N.M.; POPRYADUKHIN, A.P.; RABINOVICH, M.S.; SBITNIKOVA, I.S.; SHPIGEL', I.S.

Magnetic surfaces and the confinement of a plasma by helical fields in a stellarator with external injection. Dokl. AN SSSR 160 no.6: 1293-1295 F '65. (MIRA 18:2)

1. Submitted September 23, 1964.

"APPROVED FOR RELEASE: Thursday, September 26, 2002 CIA-RDP86-00513R002065710007-3
APPROVED FOR RELEASE: Thursday, September 26, 2002 CIA-RDP86-00513R002065710007-3"

PETROKANSKIY, B.I., ZHEREV, N.P., retsenzent; MIRIN, V.I., retsenzent; PETROV, A.I., retsenzent; KRISHTAL', L.I., red.

[Statistical accounting and the work analysis of a railroad branch] Statisticheskii uchet i analiz raboty otdeleniia dorogi. Moskva, Izd-vo "Transport," 1964. 218 p. (MIRA 17:5)

"APPROVED FOR RELEASE: Thursday, September 26, 2002 CIA-RDP86-00513R002065710007-3
APPROVED FOR RELEASE: Thursday, September 26, 2002 CIA-RDP86-00513R002065710007-3"

PETROKANSKIY, B.I.; ZVEREV, N.P., retsenzent; MIZIN, V.I., retsenzent; PETROV, A.I., retsenzent; KRISHTAL', L.I., red.; MURAV'YEVA, N.D., tekhn. red.

[Statistical accounting and the work analysis of a railroad division] Statisticheskii uchet i analiz raboty otdeleniia dorogi. Moskva, Izd-vo "Transport," 1964. 218 p. (MIRA 17:3)

"APPROVED FOR RELEASE: Thursday, September 26, 2002 CIA-RDP86-00513R002065710007-3
APPROVED FOR RELEASE: Thursday, September 26, 2002 CIA-RDP86-00513R002065710007-3"

S/081/61/000/023/058/061
B106/B101

AUTHORS: Reznikovskiy, M.M., Zverev, N.P., Denisova, L.L.

TITLE: An improved chamber for laboratory tests of the ozone resistance of rubbers

PERIODICAL: Referativnyy zhurnal. Khimiya, no. 23, 1961, 561, abstract 23P354. (Tr. N.-i. in-ta shin. prom-sti, sb. 7, 1960, 135-139)

TEXT: An installation guaranteeing satisfactory accuracy and reproducibility of measurements even at nonuniform O_3 distribution in the working chamber is described. In order to exclude fluctuations in the O_3 concentration, the case containing the samples revolves at a rate of 2 rpm. The contactless transmission of torque from the Warren motor is attained by means of a magnetic clutch. [Abstracter's note: Complete translation.]

Card 1/1

"APPROVED FOR RELEASE: Thursday, September 26, 2002 CIA-RDP86-00513R002065710007-3
APPROVED FOR RELEASE: Thursday, September 26, 2002 CIA-RDP86-00513R002065710007-3"

AUTHOR: Zverev, N.S., Engineer SOV/133-58-10-26/31

TITLE: On the Problem of Production of Deep Drawing Sheets for the Manufacture of Automobile Bodies (K voprosam proizvodstva avtolista dlya glubokoy vytyazhki)

PERIODICAL: Stal', 1958, Nr 10, p 948 (USSR)

ABSTRACT: The paper contains critical remarks on the previously published paper by G.D. Rogoza (Refs 1 and 2) in which the validity of Eriksen's test for deep drawing sheets was questioned. The present author considers that in order to supply quality sheets, the metal should be extensively tested on the producing works. There are 3 Soviet references.

ASSOCIATION: Gor'kovskiy avtomobil'nyy zavod (Gor'kiy Automobile Plant)

Card 1/1

"APPROVED FOR RELEASE: Thursday, September 26, 2002 CIA-RDP86-00513R002065710007-3
APPROVED FOR RELEASE: Thursday, September 26, 2002 CIA-RDP86-00513R002065710007-3"

ZVEREV, N.S.

Selecting sheet steel for deep-drawing of body parts. Avt. i trakt. prom. no.10:40-41 O '56. (MLRA 10:1)

1. Gor'kovskiy avtozavod imeni Molotova.
(Automobiles--Bodies) (Sheet steel)

"APPROVED FOR RELEASE: Thursday, September 26, 2002 CIA-RDP86-00513R002065710007-3
APPROVED FOR RELEASE: Thursday, September 26, 2002 CIA-RDP86-00513R002065710007-3"

ZVEREV, N.S.

Using cold-rolled sheets of nonaged steels for stamping body parts of passenger cars. Avt. i trakt. prom. no.6:31-32 Je '56. (MLRA 9:9)

1. Gor'kovskiy avtozavod imeni Molotova.
(Automobiles--Bodies) (Sheet steel)

"APPROVED FOR RELEASE: Thursday, September 26, 2002 CIA-RDP86-00513R002065710007-3
APPROVED FOR RELEASE: Thursday, September 26, 2002 CIA-RDP86-00513R002065710007-3"

AUTHOR: Zverev, N.S. SOV-113-58-9-15/19

TITLE: Tests of Imported and Domestic Cold-Rolled Plate for Automobile Bodies (Ispytaniya importnogo i otechestvennogo avtokuzovnogo kholodnokatanogo lista)

PERIODICAL: Avtombil'naya promyshlennost', 1958, Nr 9, pp 38-40 (USSR)

ABSTRACT: The Gor'kiy Motor Vehicle Plant, and also several other Soviet automobile plants, satisfied part of its requirements for cold-rolled plate for car production by imports. Especially the Gor'kiy plant obtained cold-rolled steel plate from the USA, England, West Germany and France. In order to compare the chemical analysis, mechanical properties and pressing results of the imported steel plate and that produced by the zavod "Zaporozhstal'" (Zaporozhstal'" Plant), tests of both kinds were carried out. The test results are presented on 4 tables: The percentage in the plate of carbon, manganese and sulphur (Table 1); yield point, elongation, relation between the yield point and the ultimate strength at rupture, hardness R_B, extension by Erichsen cupping test in mm, grain size in ball-marks, waste at punching (Table 2), the same data for the angular body panels of the "Pobeda" car (Table 3) and stamping results for other parts (Table 4). The author

Card 1/2

"APPROVED FOR RELEASE: Thursday, September 26, 2002 CIA-RDP86-00513R002065710007-3
APPROVED FOR RELEASE: Thursday, September 26, 2002 CIA-RDP86-00513R002065710007-3"

Tests of Imported and Domestic Cold-Rolled Plate for Automobile Bodies

evaluates these results and strongly recommends their consideration in the establishment of relevant GOST standards for the motor vehicle plants.
There are 4 tables and 3 Soviet references.

ASSOCIATION: Gor'kovskiy avtozavod (The Gor'kiy Motor Vehicle Plant)

1. Automobile industry--USSR 2. Metal plates--Effectiveness

APPROVED FOR RELEASE: Thursday, September 26, 2002 CIA-RDP86-00513R002065710007-3
APPROVED FOR RELEASE: Thursday, September 26, 2002 CIA-RDP86-00513R002065710007-3

INFLUENCE OF FREE FERRITE ON IMPACT STRENGTH. N. S. Zverev. Vestnik Metallopromy. 14, 98-102(1934)(in Russian); Met Abstracts (In Metals and Alloys) 6, 508. Low impact strength observed in processing parts made of steel contg. C 0.34-0.39, Mn 0.33-0.46, Si 0.21-0.34 and Cr 0.42-1.12% was due to the presence of free ferrite either

not brought into soln. before quenching or quenched too slowly for retaining it in soln. G. G.

ASM-SLA METALLURGICAL LITERATURE CLASSIFICATION

"APPROVED FOR RELEASE: Thursday, September 26, 2002 CIA-RDP86-00513R002065710007-3
APPROVED FOR RELEASE: Thursday, September 26, 2002 CIA-RDP86-00513R002065710007-3"

ZVEREV, N.S.

Testing imported and Russian made cold rolled sheets used for automobile bodies. Avt. prom. no.9:38-40 S '58. (MIRA 11:10)

1.Gor'kovskiy avtozavod.
(Sheet steel--Testing)

"APPROVED FOR RELEASE: Thursday, September 26, 2002 CIA-RDP86-00513R002065710007-3
APPROVED FOR RELEASE: Thursday, September 26, 2002 CIA-RDP86-00513R002065710007-3"

ZVEREV, N.V.; SHVYDKO, Z.A., red.; GRABARNIK, A.Z., red.; TURABAYEV, B., tekhn.red.

[Kazakhstan in the seven-year plan] Kazakhstan v semiletke; sbornik statei i ocherkov. Alma-Ata, Kazakhskoe gos.izd-vo, 1960. 238 p. (MIRA 13:12)
(Kazakhstan--Economic conditions)

APPROVED FOR RELEASE: Thursday, September 26, 2002 CIA-RDP86-00513R002065710007-3
APPROVED FOR RELEASE: Thursday, September 26, 2002 CIA-RDP86-00513R002065710007-3

2 ZVEREV, N.V.

BUCHKIN, Boris Alekseyevich; DOLGOPYATOV, Yu.A., red.; ZVEREV, N.V., spetsredaktor; NAGIBIN, P.A., tekhn.red.

[Kazakhstan is a republic of large-scale state farm production] Kazakhstan-respublika krupnogo sovkhoznogo proizvodstva. Alma-Ata, Kazakhskoe gos.izd-vo, 1956. 129 p. (MIRA 10:12)

(Kazakhstan--State farms)

"APPROVED FOR RELEASE: Thursday, September 26, 2002 CIA-RDP86-00513R002065710007-3
APPROVED FOR RELEASE: Thursday, September 26, 2002 CIA-RDP86-00513R002065710007-3"

ZVEREV, Nikolay Vasil'yevich, zhurnalist; MYAGKOV, M.M., red.; RAKOV, S.I., tekhn.red.

[A factory committee and production potentials] Zavkom i rezervy proizvodstva. Moskva, Izd-vo VTsSPS Profizdat, 1959. 77 p. (MIRA 14:2)
(Balkhash--Copper industry) (Trade unions)

"APPROVED FOR RELEASE: Thursday, September 26, 2002 CIA-RDP86-00513R002065710007-3
APPROVED FOR RELEASE: Thursday, September 26, 2002 CIA-RDP86-00513R002065710007-3"

ZVEREV, M.K., redaktor; SHILOV, F.G., redaktor; MAGIBIN, P.A., tekhnicheskiy redaktor

[New construction in Kazakhstan during the sixth five-year plan] Novostroiki shestoi piatiletki Kazakhstana. Alma-Ata, Kazakhskoe gos.izd-vo, 1957. 134 p. (MLRA 10:9)
(Kazakhstan--Industries) (Kazakhstan--Building)

"APPROVED FOR RELEASE: Thursday, September 26, 2002 CIA-RDP86-00513R002065710007-3
APPROVED FOR RELEASE: Thursday, September 26, 2002 CIA-RDP86-00513R002065710007-3"

ZVEREV, Nikolay Vasil'yevich; MATSKEVICH, Oleg Vasil'yevich; PRIKHOD'KO, S., red.

[Kazakhstan, the country of eagle's wings]Kazakhstan - strana orlinykh kryl'yev. Alma-Ata,"Kazakhstan", 1965. 172 p. (MIRA 18:12)

"APPROVED FOR RELEASE: Thursday, September 26, 2002 CIA-RDP86-00513R002065710007-3
APPROVED FOR RELEASE: Thursday, September 26, 2002 CIA-RDP86-00513R002065710007-3"

ZVEREV, O.S., otv. red.; MOSKOVSKAYA, L.M., red. izd-va; ZENDEL', M.Ye., tekhn. red.

[Fishes of the Usa River basin and their feeding resources] Ryby basseina r.Usy i ikh kormovye resursy. Moskva, Izd-vo Akad. nauk SSSR, 1962. 274 p. (MIRA 15:6)

1. Akademiya nauk SSSR. Komi filial, Syktyvkar.
(Usa Valley--Fishes)