"APPROVED FOR RELEASE: 08/24/2000 CIA-RDP86-00513R001651210016-8

L 4475-66 EWT(l)/EWT(m)/FCC/T/EWA(h) IJP(c) GW

ACC NR: AP5024626 SOURCE CODE: UR/0048/65/029/009/1656/1663

AUTHOR: Grigorov, N.L.; Rapoport, I.D.; Savenko, I.A.; Skuridin, G.A.; Shestoperov, V. Ya.

59
03
19

ORG: none

TITLE: Some problems and possibilities relating to investigation of cosmic rays in the 10^{11} to 10^{13} eV range /Report, All-Union Conference on Cosmic Ray Physics held at Apatity 24-31 August 1964/

SOURCE: AN SSSR. Izvestiya. Seriya fizicheskaya, v. 29, no. 9, 1965, 1656-1663

TOPIC TAGS: primary cosmic ray, secondary cosmic ray, energy distribution, nucleon interaction, artificial earth satellite, high energy particle

ABSTRACT: The authors review the available data on the energy spectrum and absorption and interaction mean free paths of nuclear-active cosmic ray particles with energies from 10^{11} to 10^{13} eV. The data are discordant, and part of this discordance is traced to neglect of the fluctuation of the fraction of the primary energy that is transferred to neutral pions in an elementary interaction event. There is evidence that the absorption and interaction mean free paths are not energy independent. It would be desirable directly to measure the interaction cross section, but it does not seem practical to do this. To measure the interaction free path in carbon for nuclear-active

Card 1/2

09010335

APPROVED FOR RELEASE: 08/24/2000 CIA-RDP86-00513R001651210016-8"

"APPROVED FOR RELEASE: 08/24/2000 CIA-RDP86-00513R001651210016-8

ACC NR: AP5024626

particles with energies above 10^{13} eV to an accuracy of 10 % by means of a 10 m^2 ionization calorimeter operating at 3200 m above sea level, for example, would require 60 years of continuous observation. A satellite-borne ionization calorimeter with a geometric factor of 10^4 cm^2 sterad, however, could accumulate very valuable data within a few months. Meanwhile, it is anticipated that new installations now under construction or recently operative will soon clarify the situation with regard to the energy spectrum of the nuclear-active component and the altitude dependence of the nucleon component. Orig. art has: 11 formulas, 2 figures, and 5 tables.

SUB CODE: NP/ SUBM DATE: 00/ ORIG REF: 018/ OTH REF: 004

Card 2/2

APPROVED FOR RELEASE: 08/24/2000 CIA-RDP86-00513R001651210016-8"

"APPROVED FOR RELEASE: 08/24/2000 CIA-RDP86-00513R001651210016-8

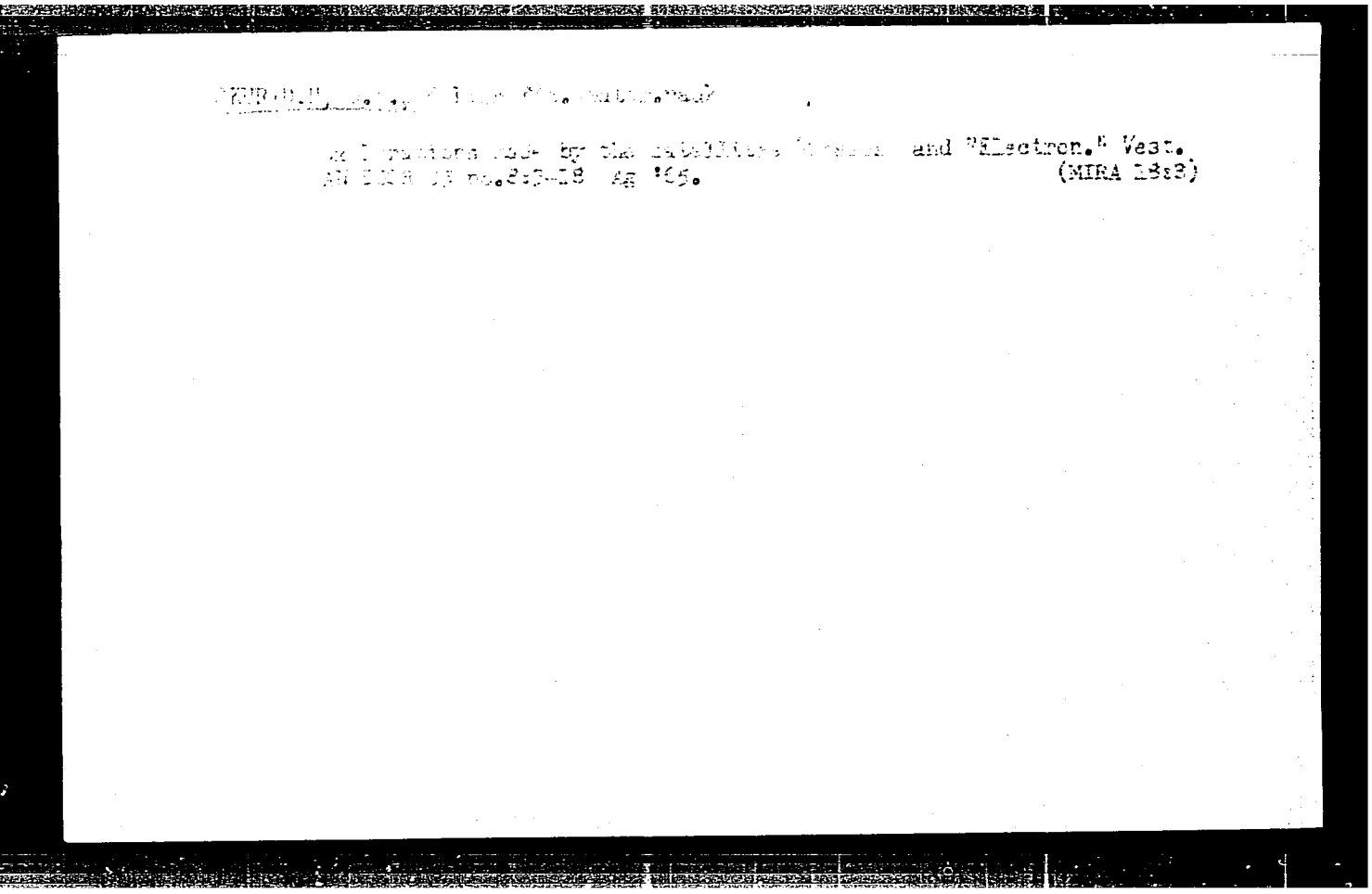

(MIRA 18:8)

APPROVED FOR RELEASE: 08/24/2000 CIA-RDP86-00513R001651210016-8"

"APPROVED FOR RELEASE: 08/24/2000 CIA-RDP86-00513R001651210016-8

ALPERT, Ya.L., doktor fiz.-matem. nauk; SKURIDIN, G.A., doktor fiz.-matem. nauk

Recent results of studies in cosmic physics; all-Union conference. Vest. AN SSSR 35 no.9:103-105 '65. (MIRA 18:9)

APPROVED FOR RELEASE: 08/24/2000 CIA-RDP86-00513R001651210016-8"

"APPROVED FOR RELEASE: 08/24/2000 CIA-RDP86-00513R001651210016-8

GRIGOROV, N.L.; NESTEROV, V.Ye.; RAPOPORT, I.D.; SAVENKO, I.A.; SKURIDIN, G.A.

Nuclear laboratory in space; a new stage in the study of super-high-energy particles. Priroda 54 no.12:7-15 D '65.
(MIRA 18:12)

APPROVED FOR RELEASE: 08/24/2000 CIA-RDP86-00513R001651210016-8"

"APPROVED FOR RELEASE: 08/24/2000 CIA-RDP86-00513R001651210016-8

L 1738-66 EWT(1)/FCC/EWA(h) GW

ACCESSION NR: AP5011291 UR/0053/65/085/004/0605/0650
525.7

AUTHORS: Skuridin, G. A.; Pletnev, V. D. 33 B

TITLE: Principal hypotheses concerning the origin of the earth's radiation belts

SOURCE: Uspekhi fizicheskikh nauk, v. 85, no. 4, 1965, 605-650

TOPIC TAGS: Van Allen belt, radiation belt, geomagnetic field, solar wind 12

ABSTRACT: Pointing out the failure of earlier attempts to interpret the available experimental material on the basis of a single hypothesis, the authors review numerous theoretical and experimental aspects of the origin of radiation belts. It is shown that the problem of investigating the earth's radiation belt is in its present stage a problem of studying the capture and motion of protons and electrons in the earth's magnetosphere. Of particular importance is the study of the interaction between the interplanetary plasma (solar wind) and the earth's magnetic field, since it may explain the various physical

Card 1/3

APPROVED FOR RELEASE: 08/24/2000 CIA-RDP86-00513R001651210016-8"

"APPROVED FOR RELEASE: 08/24/2000 CIA-RDP86-00513R001651210016-8

ACCESSION NR: AP5011291

phenomena (magnetic storms, auroras, currents in the outer atmosphere of the earth, etc.) which occur in the earth's immediate vicinity. The history of investigations of the various cosmic ray particle fluxes outside the earth's atmosphere, and especially the development of the concept that the earth's magnetic field can serve as a trap for charged particles, is traced in a brief review of the work by Stoermer, Schmidt, Alfven, and others. The various theories advanced for the kinematics and dynamics of the earth's radiation belts immediately after their discovery and following the acquisition of data with rockets and space probes is then discussed. The main emphasis is on the analysis of the dynamic and kinematic properties from the point of view of conservation of adiabatic invariants of the motion of the charaged particles in the magnetic field, which is equivalent to a consideration of the equilibrium state of the radiation belts in an unperturbed magnetic field. The authors describe the various methods of obtaining the distribution of the particles, as a function of the energy and of the spatial coordinates, from the laws of motion of the charged particles in the geomagnetic field as determined by means of the theory of adiabatic invariants.

APPROVED FOR RELEASE: 08/24/2000 CIA-RDP86-00513R001651210016-8"

"APPROVED FOR RELEASE: 08/24/2000 CIA-RDP86-00513R001651210016-8

L 1738-66
ACCESSION NR: AP5011291

Some experimental data obtained by investigation of the radiation belts are discussed. These include the geometrical structure of the radiation belts in the stationary state, the proton component, the electron component, and data on the various dynamic formations occurring in the belts. Various hypotheses concerning the origin of the earth's radiation belts are discussed, including the neutron albedo hypothesis and various hypotheses based on the effective interaction of a plasma with the magnetic field. Orig. art. has: 22 figures, 33 formulas.

ASSOCIATION: None

SUBMITTED: 00 ENCL: 00 SUB CODE: AA

NR REF SOV: 050 OTHER: 081

Card 3/3

APPROVED FOR RELEASE: 08/24/2000 CIA-RDP86-00513R001651210016-8"

"APPROVED FOR RELEASE: 08/24/2000 CIA-RDP86-00513R001651210016-8

L 36946-66 EWT(1)/FCC GW

ACC NR: AP6019591 SOURCE CODE: UR/0293/66/004/003/0378/0393

AUTHORS: Yershkovich, A. I.; Pletnev, V. D.; Skuridin, G. A.

ORG: none

TITLE: Motion of charged particles in the vicinity of the neutral point

SOURCE: Kosmicheskiye issledovaniy , v. 4, no. 3, 1966, 378-393

TOPIC TAGS: magnetic field, solar wind, magnetosphere, particle trajectory, asymptotic property, CHARGED PARTICLE, EARTH MAGNETIC FIELD

ABSTRACT: The motion of charged particles in the vicinity of neutral points is discussed, using two- and three-dimensional models. The neutral point is shown to be a regular singularity in the magnetic field and exists on the boundaries of the magnetosphere where the solar wind interacts with the geomagnetic field. Two types of fields are considered:

$$H_x = -2Ax, \quad H_y = -2Ay, \quad H_z = 4Az ,$$

and

$$H_x = -2Ax; \quad H_y = 0, \quad H_z = 2Az.$$

The orbits of charged particles are calculated first in the two-dimensional field where exact solutions are obtained for several special cases. The three-dimensional case is analyzed by using the Volosov recurrence method. The equations

UDC: 538.691

Card 1/2

APPROVED FOR RELEASE: 08/24/2000 CIA-RDP86-00513R001651210016-8"

"APPROVED FOR RELEASE: 08/24/2000 CIA-RDP86-00513R001651210016-8

$$\ddot{x} = \omega_z\dot{y} - \omega_y\dot{z},$$
$$\ddot{y} = -\omega_z\dot{x} + \omega_x\dot{z},$$
$$\ddot{z} = \omega_y\dot{x} - \omega_x\dot{y},$$

$$\omega_x = \frac{eH_x}{mc}, \quad \omega_y = \frac{eH_y}{mc}, \quad \omega_z = \frac{eH_z}{mc},$$

are solved asymptotically by assuming

$$\omega_x = \varepsilon^{n+1}\omega_1, \quad \omega_y = \varepsilon^{n+1}\omega_2, \quad \omega_z = \varepsilon^n\omega_3,$$
$$\omega_1 \sim \omega_2 \sim \omega_3 \sim 1, \varepsilon \ll 1.$$

For each magnetic field the reflection boundaries are calculated, the conditions of hose instability determined, and two mechanisms are proposed for particle penetration into the magnetosphere. The authors express gratitude to V. P. Shalimov and L. S. Chesalin for evaluating this work. Orig. art. has: 3 figures and 64 formulas. [04]

SUB CODE: 03,20/ SUBM DATE: 31Jan66/ ORIG REF: 012/ OTH REF: 006/ ATD PRESS: 5036

APPROVED FOR RELEASE: 08/24/2000 CIA-RDP86-00513R001651210016-8"

"APPROVED FOR RELEASE: 08/24/2000 CIA-RDP86-00513R001651210016-8

ACC NR: AP6034567 SOURCE CODE: UR/0020/66/170/006/1290/1291

AUTHOR: Yershkovich, A. I.; Pletnev, V. D.; Skuridin, G. A.

ORG: none

TITLE: Concerning the motion of charged particles in a sharp-corner trap

SOURCE: AN SSSR. Doklady, v. 170, no. 6, 1966, 1290-1291

TOPIC TAGS: charged particle, magnetic trap, particle trajectory

ABSTRACT: It is shown that in a magnetic trap with opposing fields, where the summary magnetic field is given by

$$H_\rho = -A\rho; \quad H_\varphi = 0; \quad H_z = 2Az;$$

the equations of motion of a particle with mass ma and charge e have, besides the solutions already obtained in other papers, also an exact particular solution corresponding to motion along the surface of the cone $\rho^2 = z^2$. Furthermore, trajectories which do not pass through the origin cannot lie on this cone. The time interval T required for the particle to cover the path from the vertex of the cone to the maximum value of z is also determined. The trajectory has a figure-8 form and the complete period of motion is equal to 4T. This report was presented by Academician G. I. Petrov 24 January 1966. Orig. art. has: 12 formulas.

SUB CODE: 20/ SUBM DATE: 18Jan66/ OIRG REF: 002/ OTH REF: 002

Card 1/1 UDC: 538.691

APPROVED FOR RELEASE: 08/24/2000 CIA-RDP86-00513R001651210016-8"

"APPROVED FOR RELEASE: 08/24/2000 CIA-RDP86-00513R001651210016-8

[illegible]

Mechanical [illegible]

Determination of the movement of a mechanism from an equation of kinetic energy, given forces as functions of speed and time. Trudy Sem. Teor. Mash., 1[illegible], No. 45, 1951.

Monthly List of Russian Accessions, Library of Congress, June 195[illegible]. UNCLASSIFIED.

APPROVED FOR RELEASE: 08/24/2000 CIA-RDP86-00513R001651210016-8"

"APPROVED FOR RELEASE: 08/24/2000 CIA-RDP86-00513R001651210016-8

SKURIDIN, M.A.

1

PHASE I BOOK EXPLOITATION SOV/5734

Akademiya nauk SSSR. Institut mashinovedeniya. Seminar po teorii mashin i mekhanizmov.

Trudy, t. 21, vyp. 83-84 (Academy of Sciences of the USSR. Institute of Machine Science. Seminar on the Theory of Machines and Mechanisms. Transactions) v.21, nos. 83-84. Moscow, Izd-vo AN USSR, 1961. 161 p. Errata slip inserted. 2000 copies printed.

Sponsoring Agency: Akademiya nauk SSSR.

Editorial Board: Resp. Ed.: I.I. Artobolevskiy, Academician, G.G. Baranov, Professor, Doctor of Technical Sciences; N.L. Bykhovskiy, Doctor of Technical Sciences; V.A. Gavrilenko, Professor, Doctor of Technical Sciences; V.A. Zinov'yev, Professor, Doctor of Technical Sciences; A.Ye. Kobrinskiy, Doctor of Technical Sciences; N.I. Levitskiy, Professor, Doctor of Technical Sciences; N.P. Rayevskiy, Doctor of Technical Sciences; L.N. Reshetov, Professor, Doctor of Technical Sciences; and M.A. Skuridin,

Card ~~1/6~~

APPROVED FOR RELEASE: 08/24/2000 CIA-RDP86-00513R001651210016-8"

"APPROVED FOR RELEASE: 08/24/2000 CIA-RDP86-00513R001651210016-8

Seminar on the Theory (Cont.) SOV/5734

Professor, Doctor of Technical Sciences; Ed. of Publishing House: A.A. Bumidenko; Tech. Ed.: S.G. Tikhomirova.

PURPOSE: This collection of articles is intended for scientific research workers and designers in the fields of machine and mechanism dynamics.

COVERAGE: The articles in No. 83 discuss the following: developments and achievements in the field of machine and experimental dynamics, including vibrations and vibratory impact; investigations in the theory of intermittent motion; differential equations for describing the joint motion of mechanical (disbalancing) vibrators; investigations into the dynamics and stability of periodic regimes of motion in vibratory-impact systems; an attempt to find an approximate periodic solution of a second-order nonlinear differential equation; and results of the application of electronic analog computers in analyzing the operation of rolling mills. No. 84 includes articles on the following: an analytical

Card ~~2/6~~

APPROVED FOR RELEASE: 08/24/2000 CIA-RDP86-00513R001651210016-8"

"APPROVED FOR RELEASE: 08/24/2000 CIA-RDP86-00513R001651210016-8

Seminar on the Theory (Cont.) SOV/5734

method for determining the positions of three-dimensional multiple-link mechanisms composed of three-dimensional kinematic groups with lower kinematic pairs; an analytical method for determining the parameters of the simplest hinged linkage with two degrees of freedom; a general method for investigating three-dimensional gearings; the effect of dry-friction dampers on vibrations in railway vehicles; and the utilization of Burmester's curves for determining the parameters of a multiple-link hinged linkage with a drill. No personalities are mentioned. References accompany individual articles. There are 260 references: 212 Soviet, 31 English, 16 German, and 1 French.

TABLE OF CONTENTS:

No. 83

Foreword 3

Card ~~3/6~~

APPROVED FOR RELEASE: 08/24/2000 CIA-RDP86-00513R001651210016-8"

"APPROVED FOR RELEASE: 08/24/2000 CIA-RDP86-00513R001651210016-8

14(5) SOV/92-58-8-18/36

AUTHOR: Skuridin, N.A., Technician-geologist

TITLE: Core Angle Gage (Uglomer dlya kerna)

PERIODICAL: Neftyanik, 1958, Nr 8, pp 20-21 (USSR)

ABSTRACT: The author states that a surveying compass is ordinarily used in core drilling for gaging a core angle. Since this instrument can hardly serve the purpose, the author, in 1950 developed a special instrument which was successfully used by him for many years. In 1956 the instrument was improved and offered for use to the Krymneftegazrazvedka trust. It has been accepted and now all the crews of exploratory drilling offices of the above trust are using it in core drilling. The instrument consists of 4 parts as shown in Fig. 1. The author describes its construction and explains how it works. Fig. 2 shows how the core angle is gaged. The instrument is suitable for gaging angles in the range from 0° to 90°. It is preferable to build the frame of the instrument from durable aluminum and its other parts from steel. The instrument and its handling is so simple that any mechanical workshop can build it. There are 2 figures.

ASSOCIATION: Krymneftegazrazvedka (The Krymneftegazrazvedka Trust)

Card 1/1

APPROVED FOR RELEASE: 08/24/2000 CIA-RDP86-00513R001651210016-8"

"APPROVED FOR RELEASE: 08/24/2000 CIA-RDP86-00513R001651210016-8

[illegible], P. [illegible].

USSR/Engineering
Publications
Electric Power Dec 48

"Reprts on Foreign Power Plants, Prepared by Engineer I. V. Feodoritov and P. N. Skuridin" 3 pp

"Elek STants" No 12

Summary of two articles. First, "Removal of Salts by Steam," is from "Combustion," Vol II, 1947. Editor notes that American researchers were the only ones to date to publish data on this subject, but adds that a number of original investigations by Soviet scientists will soon be published. Second article, "Two-Stage Mechanical Ash Separator," is from "Engineering and Boiler House Review," Vol XII, No 6 1946. Editor points out certain shortcomings of described apparatus(British).

PA 54/49T53

APPROVED FOR RELEASE: 08/24/2000 CIA-RDP86-00513R001651210016-8"

"APPROVED FOR RELEASE: 08/24/2000 CIA-RDP86-00513R001651210016-8

SKURIDIN, S. A.

USSR/ Geology

Card 1/1 Pub. 22 - 29/49

Authors : Belevtsev, Ya. N.; Siroshtan, R. I.; and Skuridin, S. A.

Title : The granites in the upper sections of the Krivoyrog formations

Periodical : Dok. AN SSSR 100/5, 951-954, Feb 11, 1955

Abstract : The discovery in 1953 of granite pebbles among the conglomerates of the Krivoyrog formations is reported. Geological data of these granite inclusions are included. Tables.

Institution : .....

Presented by: Academician A. G. Betekgtin, November 14, 1954

APPROVED FOR RELEASE: 08/24/2000 CIA-RDP86-00513R001651210016-8"

"APPROVED FOR RELEASE: 08/24/2000 CIA-RDP86-00513R001651210016-8

AKIMENKO, N.M.; BELEVTSEV, Ya.N.; GOROSHNIKOV, B.I.; DUBINKINA, R.P.; ISHCHENKO, D.I.; KARSHENBAUM, A.P.; KULISHOV, M.P.; LYASHCHENKO, K.P.; MAKSIMOVICH, V.L.; SKURIDIN, S.A.; SIROSHTAN, R.I.; TOKHTUYEV, G.V.; FOMENKO, V.Yu.; SHCHERBAKOVA, K.F.; SEMENOV, M.V., red.izd-va; AVERKIYEVA, T.A., tekhn.red.

[Geological structure and iron ores of the Krivoy Rog Basin] Geologicheskoe stroenie i zheleznye rudy Krivorozhskogo basseina. Moskva, Gos. nauchno-tekhn.izd-vo lit-ry po geologii i okhrane nedr, 1957. 278 p. (MIRA 11:3)
(Krivoi Rog Basin--Geology)

APPROVED FOR RELEASE: 08/24/2000 CIA-RDP86-00513R001651210016-8"

"APPROVED FOR RELEASE: 08/24/2000 CIA-RDP86-00513R001651210016-8

SKURIDIN, Serafim Aleksandrovich [Skuridin, S.O.]; BELEVTSEV, Ya.M. [Bielievtsev, IA.M.], otv.red.; MEL'NIK, G.F. [Mel'nyk, H.F.], red.izd-va; YURCHISHIN, V.G. [IUrchishin, V.H.], tekhn.red.

[Detailed stratigraphic scale of the central series in the Sansagan' area of the Krivoy Rog Basin] Detalizatsiia stratygrafichnoi skhemy seredn'oi svity Saksahans'koho raionu Kryvoho rohu. Kyiv, Vyd-vo Akad.nauk Ukr. RSR 1958. 35 p. (Akademiia nauk URSR. Kiev.Instytut geologichnykh nauk. Trudy, no.2). (MIRA 13:2)

(Krivoy Rog Basin--Geology, Stratigraphic)

APPROVED FOR RELEASE: 08/24/2000 CIA-RDP86-00513R001651210016-8"

"APPROVED FOR RELEASE: 08/24/2000 CIA-RDP86-00513R001651210016-8

BELEVTSOV, Ya.N.; SKURIDIN, S.A.

Industry should be provided with thoroughly explored deposits [with summary in English]. Sov. geol. no. 5:110-116 My '58. (MIRA 11:10)

1. Institut geologicheskikh nauk AN USSR.
(Prospecting)

APPROVED FOR RELEASE: 08/24/2000 CIA-RDP86-00513R001651210016-8"

"APPROVED FOR RELEASE: 08/24/2000 CIA-RDP86-00513R001651210016-8

BELEVTSEV, Ya.N; KALYAYEV, G.I.; ZAGORUYKO, L.G.; SKURIDIN, S.A.; STRYGIN, A.I.; FEDYUSHIN, S.Ye.; FOMENKO, V.Yu.

Krivoy Rog-Kremenchug metallogenic zone. Geol.rud. mestorozh. no.6: 3-11 N-D '60. (MIRA14:3)

1. AN USSR, Geologischeskiy institut, Kiyev.
(Ukraine—Ore deposits)

APPROVED FOR RELEASE: 08/24/2000 CIA-RDP86-00513R001651210016-8"

"APPROVED FOR RELEASE: 08/24/2000 CIA-RDP86-00513R001651210016-8

SKURIDIN, S. A., CAND GEOL-MIN SCI, "STRATIGRAPHY AND ORE-BEARING ~~CHARACTERISTICS~~ propsity OF THE CENTRAL FORMATION OF ~~THE~~ SAKSAGANSKIY RAYON." KIEV, 1961. (MIN OF HIGHER AND SEC SPEC ED UKSSR, KIEV ORDER OF LENIN STATE UNIV IM T.G. SHEVCHENKO). (KL, 3-61, 208).

APPROVED FOR RELEASE: 08/24/2000 CIA-RDP86-00513R001651210016-8"

"APPROVED FOR RELEASE: 08/24/2000 CIA-RDP86-00513R001651210016-8

BLELVTSEV, Ya.N.; ZAGORUYKO, L.G.; KALYAYEV, G.I.; MOLYAVKO, G.I.; SKURIDIN, S.A.; STRYGIN, A.I.; FEDYUSHIN, S.Ye.; FOMENKO, V.Yu.

Metallogenetic features of the Ukranian iron-ore province. Zakonom. razm. polezn. iskop. 5:82-109 '62. (MIRA 15:12)

1. Institut geologicheskikh nauk AN Ukrainskoy SSR.
(Ukraine--Ore deposits)

APPROVED FOR RELEASE: 08/24/2000 CIA-RDP86-00513R001651210016-8"

"APPROVED FOR RELEASE: 08/24/2000 CIA-RDP86-00513R001651210016-8

BABINETS, A.Ye.; BELEVTSEV, Ya.N.; BONDARCHUK, V.G.; KONDRACHUK, V.Yu.; POVARENNYKH, A.S.; SEMENENKO, N.P.; SKURIDIN, S.A.; TKACHUK, L.G.

In memory of Sergei Petrovich Radionov. Zap. Ukr. otd. Min. ob-va [no.1]:173-178 '62. (MIRA 16:8)

APPROVED FOR RELEASE: 08/24/2000 CIA-RDP86-00513R001651210016-8"

"APPROVED FOR RELEASE: 08/24/2000 CIA-RDP86-00513R001651210016-8

BELEVTSEV, Ya.N.; SKURIDIN, S.A.; USENKO, I.S.

Concerning A.V. Sidorenko and O.I. Lunevoi's book "Lithologic study of metamorphic layers." Sov. geol. 6 no.7:162-165 Jl '63. (MIRA 16:8)

APPROVED FOR RELEASE: 08/24/2000 CIA-RDP86-00513R001651210016-8"

"APPROVED FOR RELEASE: 08/24/2000 CIA-RDP86-00513R001651210016-8

AYZENBERG, D.Ye.; BELEVTSEV, Ya.N.; BORDUNOV, I.N.; BORISENKO, S.T.; BULKIN, G.A.; GORLITSKIY, B.A.; DOVGAN', M.N.; ZAGORUYKO, L.G.; KAZAKOV, L.K.; KALYAYEV, G.I.; KARASIK, M.A.; KACHAN, V.G.; KISELEV, A.S.; LAGUTIN, P.K.; LAZARENKO, Ye.K.; LAZARENKO, E.A.; LAPITSKIY, E.M.; LAPCHIK, F.Ye.; LAS'KOV, V.A.; LEVENSHTEYN, M.L.; MALAKHOVSKIY, V.F.; MITKEYEV, M.V.; PRUSS, A.K.; SKARZHINSKIY, V.I.; SKURIDIN, S.A.; SOLOV'YEV, F.I.; STRYGIN, A.I.; SUSHCHUK, Ye.G.; TEPLITSKAYA, N.V.; FEDYUSHIN, S.Ye.; FOMENKO, V.Yu.; SHKOLA, T.N.; SHTERNOV, A.G.; YAROSHCHUK, M.A.; ZAVIRYUKHINA, V.N., red.

[Problems of metallogeny in the Ukraine] Problemy metallogenii Ukrainy. Kiev, Naukova dumka, 1964. 254 p. (MIRA 18:1)

1. Akademiya nauk URSR, Kiev. Instytut geologichnykh nauk.

APPROVED FOR RELEASE: 08/24/2000 CIA-RDP86-00513R001651210016-8"

"APPROVED FOR RELEASE: 08/24/2000 CIA-RDP86-00513R001651210016-8

MAGAK'YAN, I.G.; AKIMENKO, N.M.; BELEVTSEV, Ya.N.; GERSHOYG, Yu.G.; GRECHISHNIKOV, N.P.; KALYAYEV, G.I.; KARSHENBAUM, A.P.; KRAVCHENKO, V.M.; KULISHOV, M.P.; MAKSIMOVICH, V.L.; MEL'NIK, Yu.P.; PITADE, A.A.; SKURIDIN, S.A.; STRIGIN, A.I.; FEDORCHENKO, V.S.; FOMENKO, V.Yu.

Reviews and bibliography. Geol. rud. mestorozh. 7 no.3:113-117 My-Je '65. (MIRA 18:7)

APPROVED FOR RELEASE: 08/24/2000 CIA-RDP86-00513R001651210016-8"

"APPROVED FOR RELEASE: 08/24/2000 CIA-RDP86-00513R001651210016-8

SKURIDIN, V.A.

Intrusive complexes of the Kuray ore zone (Gornyy Altai). Geol. i geofiz. no.2:48-62 '64. (MIRA 18:4)

1. Institut geologii i geofiziki Sibirskogo otdeleniya AN SSSR, Novosibirsk.

APPROVED FOR RELEASE: 08/24/2000 CIA-RDP86-00513R001651210016-8"

"APPROVED FOR RELEASE: 08/24/2000 CIA-RDP86-00513R001651210016-8

SKURIDIN, V.A.; NIKITINA, Ye.I.

Geochemical characteristics of the biotites of intrusive and metamorphic formations in the Kuray Range (Gornyy Altai). Geol. i geofiz. no.6:158-163 '64. (MIRA 18:11)

1. Institut geologii i geofiziki Sibirskogo otdeleniya AN SSSR, Novosibirsk.

APPROVED FOR RELEASE: 08/24/2000 CIA-RDP86-00513R001651210016-8"

"APPROVED FOR RELEASE: 08/24/2000 CIA-RDP86-00513R001651210016-8

SKURIDIN, V.A.

Geochemical characteristics of Caledonian intrusive complexes in the Kuray ore zone. Izv. Alt. otd. Geog. ob-va SSSR no.5: 55-56 '65. (MIRA 18:12)

APPROVED FOR RELEASE: 08/24/2000 CIA-RDP86-00513R001651210016-8"

"APPROVED FOR RELEASE: 08/24/2000 CIA-RDP86-00513R001651210016-8

OBOLENSKIY, A.A.; OBOLENSKAYA, R.V.; SKURIDIN, V.A.

Regional zonality in the distribution of magmatism and endogenic oreproducing mineralization in the southeastern Gornyy Altai. Izv. Alt. otd. Geog. ob-va SSSR no.5:52-54 '65.

(MIRA 18:12)

1. Institut geologii i geofiziki Sibirskogo otdeleniya AN SSSR.

APPROVED FOR RELEASE: 08/24/2000 CIA-RDP86-00513R001651210016-8"

"APPROVED FOR RELEASE: 08/24/2000 CIA-RDP86-00513R001651210016-8

SOV/112-58-2-2738

Translation from: Referativnyy zhurnal, Elektrotekhnika, 1958, Nr 2, p 149 (USSR)

AUTHOR: Skuridin, V. P.

TITLE: Fundamental Principles of the Remote Automation of Production (Osnovnyye printsipy teleavtomatizatsii proizvodstvennykh protsessov)

PERIODICAL: Sessiya AN SSSR po nauchn. probl. avtomatiz. proiz-va, 1956, T. 4, M., AS USSR, 1957, pp 203-204

ABSTRACT: The specifications of remote automation systems are listed. Experimental models of such a system, developed by the Ural Polytechnic Institute for controling a weighbridge, are noted.

Card 1/1

APPROVED FOR RELEASE: 08/24/2000 CIA-RDP86-00513R001651210016-8"

"APPROVED FOR RELEASE: 08/24/2000 CIA-RDP86-00513R001651210016-8

507/144-58-9-18/18

AUTHOR: Gikis, A. F., Candidate of Technical Sciences, Docent

TITLE: Inter-University Scientific Conference on Electric Measuring Instruments and Technical Means of Automation (Mezhvuzovskaya nauchnaya konferentsiya po elektroizmeritel'nym priboram i tekhnicheskim sredstvam avtomatiki)

PERIODICAL: Izvestiya Vysshikh Uchebnykh Zavedeniy, Elektromekhanika, 1958, Nr 9, pp 130-135 (USSR)

ABSTRACT: The conference was held at the Leningradskiy elektrotekhnicheskiy institut imeni V. I. Ul'yanova (Lenina) (Leningrad Electro-technical Institute imeni V. I. Ul'yanov (Lenin)) on November 11-15, 1958. The representatives of eleven higher teaching establishments and three research institutes participated and a large number of specialists of various industrial undertakings were present.

Docent B. M. Smolov (Leningrad Electro-Technical Institute) read the paper "Non-linear electronic voltage transformers with a numerical electronic he considered two methods of transforming voltages into a numerical code.

Card 5/13 V. P. Skuridin (Ural Polytechnical Institute imeni S. M. Kirov) presented the paper "New counters based on polarized relays". These do not suffer from the

disadvantage of existing counters, namely, that the results are lost if the current supply is accidentally interrupted.

Professor A. V. Frenke and Docent Ye. M. Dushin (Leningrad Electro-Technical Institute) presented the paper "Metering transducers for automatic instruments with discrete types of recording".

Candidate of Technical Sciences V. B. Ushakov and P. M. Kopay-Gora (Scientific Research Institute for Computers) presented the paper "Computing equipment for automatic centralized control of production parameters".

Candidate of Technical Sciences V. B. Ushakov presented the paper "Certain trends in the development of analogue computers and of computing devices intended for use in industry".

APPROVED FOR RELEASE: 08/24/2000 CIA-RDP86-00513R001651210016-8"

"APPROVED FOR RELEASE: 08/24/2000 CIA-RDP86-00513R001651210016-8

BLAZHKIN, Arkadiy Timofeyevich, prof., doktor tekhn.nauk. Prinimal uchastiye: SKURIDIN, V.P., inzh.. POPOV, G.A., dotsent, red.; MIRSKAYA, V.V., red.izd-va; BERESLAVSKAYA, L.Sh., tekhn.red.

[Principles of automatic and remote control in mining] Osnovy rudnichnoi avtomatiki i telemekhaniki. Moskva, Gos.nauchno-tekhn.izd-vo lit-ry po gornomu delu, 1959. 417 p. (MIRA 12:11)
(Mining engineering) (Automatic control)
(Remote control)

APPROVED FOR RELEASE: 08/24/2000 CIA-RDP86-00513R001651210016-8"

"APPROVED FOR RELEASE: 08/24/2000 CIA-RDP86-00513R001651210016-8

8(2), 9(6)
AUTHOR: Anisimov, V. I., Engineer SOV/119-59-3-13/15

TITLE: The Inter-university Scientific Conference on Electrical Measuring Instruments and on the Technical Means of Automation (Mezhvuzovskaya nauchnaya konferentsiya po elektroizmeritel'nym priboram i tekhnicheskim sredstvam avtomatiki)

PERIODICAL: Priborostroyeniye, 1959, Nr 3, pp 30-31 (USSR)

ABSTRACT: This Conference was held at the Leningradskiy elektrotekhnicheskiy institut im. V. I. Ul'yanova (Lenina) (Leningrad Institute of Electrical Engineering Imeni V. I. Ul'yanov (Lenin)) in November 1958. It was attended by more than 500 representatives of universities, scientific research institutes, of the OKB, the SKB (Special Design Office), of industries and other organizations. More than 30 lectures were delivered in the meetings of this Conference. In opening the conference M. P. Borodikhin underlined the outstanding importance of automation and of measuring technique for the development of national economy. M. M. Shumilovskiy in his lecture reported on "The Trends in the Development of Methods of Radioactive Control of Production Data" and outlined the extensive possibilities of using radioactive methods in such control. Ya. G. Shrenkov and S. A. Spektor reported on a new method of measuring heavy direct currents with the help of the nuclear magnetic resonance. M. A. Rozenblat investigated problems of the application of magnetic amplifiers in automation and in measuring technique. A. V. Fateyev reported on the present-day state on the prospects of automatic control technique. Ya. Z. Tsypkin investigated some peculiar features of and the prospects offered by automatic pulse systems. The lecture by N. G. Boldyrev dealt with problems of stability of discrete automatic systems. V. B. Ushakov discussed the main trends in the development of mathematical analog computers and of computers designed for industrial use. The report by V. S. Rybashkin deals with an electronic analog correlator for the calculation of correlation functions in the investigation of winds in the ionosphere. B. I. Turgenson reported on the most important methods, which guarantee both an active and passive freedom from disturbances in discrete selective systems. Ya. V. Novosel'tsev discussed problems of averaging, differentiation, and balancing of time-dependent functions which can be represented by electric signals. V. P. Skuridin investigated new computing devices with polarized relays. L. V. Freske and Ye. K. Dushin reported on instrument transformers for automatic instruments with automatic recording. V. B. Ushakov and E. M. Kopay-Gora reported on a computer for the automatic centralized control of production specifications. E. M. Fetisov discussed fundamental problems of the theory of automatic measuring instruments with an inverse conversion for the measurement of non-electric quantities. Ye. I. Tsygankov dealt with problems of the construction of automatic d. c. potentiometers with high accuracy. D. I. Malov discussed a high-precision automatic d. c. bridge for digital computations. The participants in the Congress listed below discussed the following subjects (which, however, are not given by the exact wording of the titles): V. A. Ivantsov The planning of measuring elements for

Card 1/5 Card 2/5 Card 3/5

APPROVED FOR RELEASE: 08/24/2000 CIA-RDP86-00513R001651210016-8"

"APPROVED FOR RELEASE: 08/24/2000 CIA-RDP86-00513R001651210016-8

PAGE - 2

The Inter-university Scientific Conference on Electrical Measuring Instruments and on the Technical Means of Automation SOV/119-59-3-13/15

accurate automatic quotient-type meters in digital computations. R. R. Kharchenko: Methods of determining the dynamic errors of a magnetic oscilloscope by simulation. P. P. Ornatskiy: Problems in measuring electric quantities at extremely low frequencies by electrical indicating instruments of various systems. L. F. Kulikovskiy: Novel types of a. c. compensators. A. S. Rozenkrants: Automatic bridges and a. c. compensators suited for the control of the parameters of condensers in series production. L. I. Stolov: Some characteristics of midget induction motors which can be used in measuring technique and automation. D. A. Borodayev: Ultrasonic pressure- and liquid level gages. Yu. A. Skripnik: The circuitry of a phase—sensitive commutation indicator for a. c. semi-equilibrium bridges. N. F. Suvid: The application of instruments with magnetic bridges, which permit a considerable simplification of the design of the apparatus and the circuitry used in the measurement of non-electric quantities. V. A. Ferents: Method of increasing the sensitivity of oxygen gas analyzers. P. V. Novitskiy: Design of apparatus for measuring vibration quantities. V. V. Pasynkov: Main types of non-linear semiconductor resistors and possibilities of their application to circuitry in automation and measuring technique. G. N. Novopashennyy: Development of measuring amplifiers with semiconductor triodes. Ya. V. Novosel'tsev, N. A. Smirnov, Ye. Ye. Afanas'yev, Ye. P. Ugryumov: Precision semiconductor frequency meter operating according to the pulse-counting principle. P. G. Nikitin and A. Bezukladnikov: Methods of measuring the magnetic field strength by means of bismuth resistors and transducers operating on the Hall effect principle. A resolution was adopted by the closing plenary meeting of the Conference, which indicates ways of improving and coordinating scientific research work in the field of automation, electric measuring- and computing technique.

Card 4/5

Card 5/5

APPROVED FOR RELEASE: 08/24/2000 CIA-RDP86-00513R001651210016-8"

"APPROVED FOR RELEASE: 08/24/2000 CIA-RDP86-00513R001651210016-8

28(2) SOV/146-2-4-11/19

AUTHOR: Skuridin, V.P., Engineer

TITLE: New Polarized-Relay Translators

PERIODICAL: Izvestiya vysshikh uchebnykh zavedeniy. Priborostroyeniye, 1959, Nr 4, pp 85-90 (USSR)

ABSTRACT: The design and performance of polarized-relay translators based on two-cycle polarized-relay elements (Figure 1, circuit diagram), for which the author obtained the author's certificate Nr 119721 on March 5, 1959, are discussed. By using polarized relays, it was intended to make a reliable and sufficiently quick-acting pulse counter which could retain the readings during emergencies, e.g. breakdowns of current supply. Since, in many cases, the quick-acting circuit of the two-cycle polarized-relay translator is inadequate, the author developed a single-cycle translator (Figures 2-and 3) which is

Card 1/2

APPROVED FOR RELEASE: 08/24/2000 CIA-RDP86-00513R001651210016-8"

"APPROVED FOR RELEASE: 08/24/2000 CIA-RDP86-00513R001651210016-8

New Polarized-Relay Translators

obtained by switching over the relay excitation circuit on the minus side of the two-cycle translator. The instruments described are fed by d.c. current. They can be used anywhere, where the a.c. current is not suitable or not available and very high reliability is required. This article was recommended by the Kafedra avtomatiki i telemekhaniki (The Chair of Automatics and Telemechanics). There are 3 diagrams.

ASSOCIATION: Ural'skiy politekhnicheskiy institut imeni S.M. Kirova (The Urals Polytechnical Institute imeni S.M. Kirov)

SUBMITTED: February 3, 1959

APPROVED FOR RELEASE: 08/24/2000 CIA-RDP86-00513R001651210016-8"

"APPROVED FOR RELEASE: 08/24/2000 CIA-RDP86-00513R001651210016-8

TORBENKOV, G.M.; SKURIDIN, V.P.; YANKO-TRINITSKIY, A.A.

Device for taking oscillograms of the working angle of a slow-running synchronous motor during the presence of transients. Elektrichestvo no.4:89-90 Ap '63. (MIRA 16:5)

1. Ural'skiy politekhnicheskiy institut.
(Transients (Electricity))
(Electric machinery, Synchronous)

APPROVED FOR RELEASE: 08/24/2000 CIA-RDP86-00513R001651210016-8"

"APPROVED FOR RELEASE: 08/24/2000 CIA-RDP86-00513R001651210016-8

BEZUKLADNIKOV, D.A.; SKURIDIN, V.P.

Device for measuring heavy direct currents. Izm.tekh. no.5:35-36 My '63. (MIRA 16:10)

APPROVED FOR RELEASE: 08/24/2000 CIA-RDP86-00513R001651210016-8"

"APPROVED FOR RELEASE: 08/24/2000 CIA-RDP86-00513R001651210016-8

L 19912-63 EWT(d)/FCC(w)/BDS--ASD/ESD-3/APGC/IJP(C)--Pg-4/Pk-4/Po-4/Pq-4
--GG
ACCESSION NR: AP3007295 S/0119/63/000/009/0017/0018

AUTHOR: Skuridin, V. P. 16C 74

TITLE: Arithmetic-output 16C parallel-readout analog-code converter

SOURCE: Priborostroyeniye, no. 9, 1963, 17-18

TOPIC TAGS: analog-code converter, parallel readout

ABSTRACT: Four logic schemes for converting Gray code into ordinary arithmetical code are considered: (1) Except-or operation is realized by forbid-not ferrite standard components; (2) Wherever simpler devices or elimination of bulky power supply is desirable, a circuit with electromagnetic relays whose windings are grounded at midpoints can be used; (3) If phase shifts 0° and 180° are used as signals, a phase-inverter conversion circuit is realizable (e.g., with parametrons); (4) A special relay circuit is also applicable for phase-shift input; an example of converting 01001 Gray code is shown. Orig. art. has:

Card 1/2

APPROVED FOR RELEASE: 08/24/2000 CIA-RDP86-00513R001651210016-8"

"APPROVED FOR RELEASE: 08/24/2000 CIA-RDP86-00513R001651210016-8

L 19912-63
ACCESSION NR: AP3007295

4 figures.

ASSOCIATION: none

SUBMITTED: 00	DATE ACQ: 07Oct63	ENCL: 00
SUB CODE: CP	NO REF SOV: 001	OTHER: 002

Card 2/2

APPROVED FOR RELEASE: 08/24/2000 CIA-RDP86-00513R001651210016-8"

"APPROVED FOR RELEASE: 08/24/2000 CIA-RDP86-00513R001651210016-8

TORBENKOV, Gennadiy Moiseyevich, aspirant; SKURIDIN, Vladimir Petrovich, kand.tekhn.nauk, dotsent; YANKO-TRINITSKIY, Aleksandr Aleksandrovich, doktor tekhn.nauk,prof.

Oscillographic recording of the working angle of a noiseless synchronous motor during electromechanical transients. Izv.vys.ucheb. zav.; elektromekh. 7 no.1:111-116 '64. (MIRA 17:9)

1. Kafedra teoreticheskikh osnov elektrotekhniki Ural'skogo politekhnicheskogo instituta (for Torbenkov). 2. Kafedra avtomatiki i telemekhaniki Ural'skogo politekhnicheskogo instituta (for Skuridin). 3. Zaveduyushchiy kafedroy teoreticheskikh osnov elektrotekhniki Ural'skogo politekhnicheskogo instituta (for Yanko-Trinitskiy).

APPROVED FOR RELEASE: 08/24/2000 CIA-RDP86-00513R001651210016-8"

"APPROVED FOR RELEASE: 08/24/2000 CIA-RDP86-00513R001651210016-8

L 11118-66 EWT(d)/EWP(1) IJP(c) BB/GG

ACC NR: AP6002173 SOURCE CODE: UR/0146/65/008/006/0068/0072

AUTHOR: Pautov, V. I.; Savel'yev, B. N.; Skuridin, V. P.

ORG: Dept.of Automation and Telemechanics, Ural Polytechnic Institute im. S. M. Kirov (Kafedra avtomatiki i telemekhaniki, Ural'skiy politekhnicheskiy institut)

TITLE: Contactless shaft-position to code converter with parallel readout

SOURCE: IVUZ. Priborostroyeniye, v. 8, no. 6, 1965, 68-72

TOPIC TAGS: analog digital converter, computer component

ABSTRACT: A position-to-code converter operating on the principle of intermediate phase shift is described. The code wheel is masked according to the Gray code, and angular displacements may be coded in degrees, radians or the graduations of any other angular scale. A block diagram of the converter is shown in the figure. The strobe pulse is applied to the left inputs of the AND gates, which are controlled by the code scanner at the right inputs. Coincidence produces a binary coded output. The frequency scaler together with the code scanner may be set to give an output in discrete units equal to $\Delta\phi = 360°/2K$, where K is the ratio of clock pulse repetition frequency to the pulse repetition frequency of the highest order track of the code wheel. The same reduction factor may be obtained by eliminating section a (see Fig. 1) from the code wheel. Practical considerations limit the number of bits of the

Card 1/8 UDC: 681.142.621

APPROVED FOR RELEASE: 08/24/2000 CIA-RDP86-00513R001651210016-8"

"APPROVED FOR RELEASE: 08/24/2000 CIA-RDP86-00513R001651210016-8

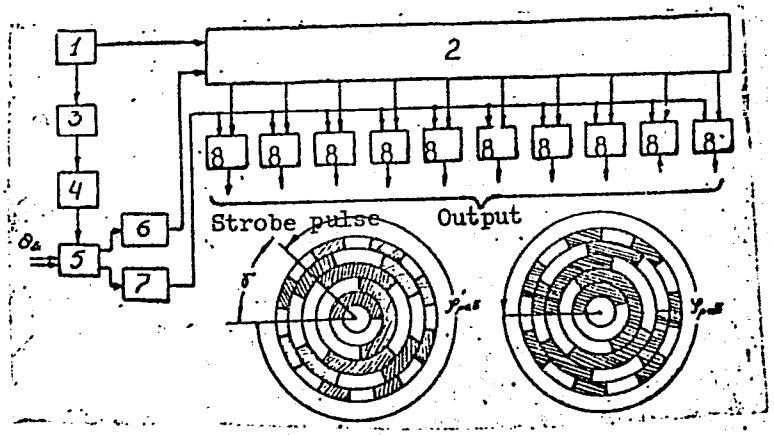

Fig. 1. Position-to-code-converter

1 - System clock; 2 - code scanner; 3 - frequency scaler; 4 - filter tuned to phase-shifter power frequency; 5 - induction-type phase shifter; 6, 7 - strobe pulse generators; 8 - AND gates.

converter output to 12--13; attainable linearity is ±1 angular minute. Orig. art. has: 3 figures and two formulas. [BD]

APPROVED FOR RELEASE: 08/24/2000 CIA-RDP86-00513R001651210016-8"

"APPROVED FOR RELEASE: 08/24/2000 CIA-RDP86-00513R001651210016-8

L 11118-66
ACC NR: AP6002173

SUB CODE: 09/ SUBM DATE: 060ct64/ ATD PRESS: 4176

Card 3/3

APPROVED FOR RELEASE: 08/24/2000 CIA-RDP86-00513R001651210016-8"

"APPROVED FOR RELEASE: 08/24/2000 CIA-RDP86-00513R001651210016-8

TORBENKOV, Gennadiy Moiseyevich, aspirant; SKURIDIN, Vladimir Petrovich, kand. tekhn.nauk, dotsent; YANKO-TRINITSKIY, Aleksandr Aleksandrovich, doktor tekhn.nauk, prof.

Analysis of some sources of error in electronic impulse-type phase meters. Izv.vys.ucheb.zav.; elektromekh. 8 no.9:1049-1055 '65. (MIRA 18:10)

1. Kafedra teoreticheskikh osnov elektrotekhniki Ural'skogo politekhnicheskogo instituta (for Torbenkov). 2. Kafedra avtomatiki i telemekhaniki Ural'skogo politekhnicheskogo instituta (for Skuridin). 3. Zaveduyushchiy kafedroy teoreticheskikh osnov elektrotekhniki Ural'skogo politekhnicheskogo instituta (for Yanko-Trinitskiy).

APPROVED FOR RELEASE: 08/24/2000 CIA-RDP86-00513R001651210016-8"

"APPROVED FOR RELEASE: 08/24/2000 CIA-RDP86-00513R001651210016-8

L 47043-66 EWT(d)/EWP(1) IJP(c) BB/GG
ACC NR: AP6015880 SOURCE CODE: UR/0167/65/000/006/0008/0013

AUTHOR: Bekmuratov, T. F.; Skuridin, V. P.; Malinovskiy, B. N.

ORG: Institute of Cybernetics, AN UkrSSR (Institut kibernetiki AN UkrSSR)

TITLE: Analog-digital multiplication systems

SOURCE: AN UkrSSR. Izvestiya. Seriya tekhnicheskikh nauk, no. 6, 1965, 8-13

TOPIC TAGS: analog digital conversion, analog digital computer system, electron multiplier

ABSTRACT: The report reviews operating principles of analog digital computer systems. Grouping these by type of output (i.e., in analog or digital form), the authors attempt a classification by the method underlying the "analog to code" and "code to analog" conversions. Six design principles are illustrated. It is concluded that a cyclical program of converting analog magnitudes by successive registration of single increments with intermediate conversion to frequency or time intervals offers the most effective approach to systems with a digital output. Widespread employment of the comparison and readout approach will require a simplification of its current complexity. Multiplication of digital codes by analog magnitudes, utilizing analog-to-code converters in which the multiplication is accomplished during the conversion process, permits maintenance of accuracy levels typical of the converting system itself.

Card 1/2

APPROVED FOR RELEASE: 08/24/2000 CIA-RDP86-00513R001651210016-8"

"APPROVED FOR RELEASE: 08/24/2000 CIA-RDP86-00513R001651210016-8

L 47043-66

ACC NR: AP6015880

Orig. art. has: 3 figures.

SUB CODE: 09/ SUBM DATE: 25Jun65/ ORIG REF: 009/ OTH REF: 002

Card 2/2 ULR

APPROVED FOR RELEASE: 08/24/2000 CIA-RDP86-00513R001651210016-8"

"APPROVED FOR RELEASE: 08/24/2000 CIA-RDP86-00513R001651210016-8

L 20677-66 EWT(d)/EWP(1) IJP(c) BB/GG
ACC NR: AP6008680 SOURCE CODE: UR/0167/66/000/001/0017/0021

AUTHOR: Bekmuratov, T. F.; Malinovskiy, B. N.; Skuridin, V. P.

ORG: Institute of Cybernetics AN UkrSSR (Institut kibernetiki AN UkrSSR); Institute of Mechanics and Computing Center AN UzSSR (Institut mekhaniki i Vychislitel'nyy tsentr AN UzSSR)

TITLE: Analog-digital multiplier

SOURCE: AN UzSSR. Izvestiya. Seriya tekhnicheskikh nauk, no. 1, 1966, 17-21

TOPIC TAGS: computer component, analog digital converter, analog digital computer system

ABSTRACT: The authors describe an analog-digital multiplier based on a sequential counting cyclic converter with intermediate conversion of the analog quantity to a time interval. The input voltage (first cofactor) is converted to a time interval by comparison with a linearly variable compensating voltage whose slope is proportional to the magnitude of the second confactor which is given in the form of a code. The resultant time interval, which is proportional to the product of the converted voltage and the code, is filled with fixed frequency pulses and calculated

Card 1/2

APPROVED FOR RELEASE: 08/24/2000 CIA-RDP86-00513R001651210016-8"

"APPROVED FOR RELEASE: 08/24/2000 CIA-RDP86-00513R001651210016-8

L 20677-66

ACC NR: AP6008680

in the output counter. This method of multiplication is illustrated by the figure which shows the linear voltage U_{lin} and the voltage to be converted U_1. Voltage U_1 is converted to the time interval τ $\tau U \cot\alpha$. $\cot\alpha$ is proportional to the RC time product of the linear voltage generator. Consequently, $\tau=k_1RCU_1$. It is clear from this relationship that if either R or C is proportional to the second cofactor A, τ will be proportional to the product AU_1, i. e. $\tau=KAU_1$. Block and schematic diagrams of the multiplier are given. RES-9 electromechanical relays with an operating frequency of 100 cps were used in the laboratory model of the analog-digital multiplier. The time required for a single multiplication using relays of this type is 10 msec. Orig. art. has: 3 figures. [14]

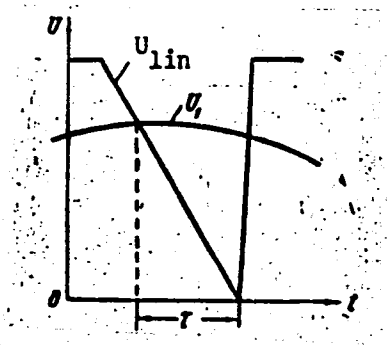

SUB CODE: 09/ SUBM DATE: 15Sep65/ ORIG REF: 002/ ATD PRESS: 4223

Card 2/2 BK

APPROVED FOR RELEASE: 08/24/2000 CIA-RDP86-00513R001651210016-8"

"APPROVED FOR RELEASE: 08/24/2000 CIA-RDP86-00513R001651210016-8

ACC NR: AP6031014 SOURCE CODE: UR/0167/66/000/004/0027/0030

47
B

AUTHOR: Bekmuratov, T. F.; Skuridin, V. P.

ORG: Institute of Cybernetics, AN UkrSSR (Institut kibernetiki AN UkrSSR)

TITLE: An analog-digital multiplier with an extended variation range for the coded factor

SOURCE: AN UzSSR. Izvestiya. Seriya tekhnicheskikh nauk, no. 4, 1966, 27-30

TOPIC TAGS: pulse multiplication, logic circuit, ANALOG DIGITAL COMPUTER SYSTEM, BINARY CODE

ABSTRACT: An analog-digital multiplier whose block diagram is shown in the figure is presented. The factors to be multiplied are: 1) a binary coded quantity entered into the register from terminal A, and 2) a voltage level U_1 between 0 and 10 v. The operation is as follows: the code entering the 10-bit register (1) sets the switching relays K_1, K_2,....K_N (operating time, 20 msec) into an open or closed position depending on the code. The relay contacts either short out portions of a tapped resistor R or include them in the RC phantastron ramp generating circuit (2), which also includes a constant resistance R_0. The negative slope ramp, on reaching a level U_1 causes the comparator (3) to issue a pulse at its output (4) which opens a gate (6) permitting pulses with f_0 repetition frequency from generator (11) to reach the counter (13) via the forward count input lead (12). The gate (6) is blocked by a pulse at (7) when the ramp at (5) reaches 0 v. The same pulse sets the flip-flop (8) which clears the input register, activates the reversing gate (10), and causes another

Card 1/3

APPROVED FOR RELEASE: 08/24/2000 CIA-RDP86-00513R001651210016-8"

"APPROVED FOR RELEASE: 08/24/2000 CIA-RDP86-00513R001651210016-8

ramp voltage (using only R_0 and C) to be generated after a time delay determined by a delay line (15). The pulse counter (13) counts down during this part of the cycle, which is terminated as previously. The product is given with an accuracy of ±0.2% at

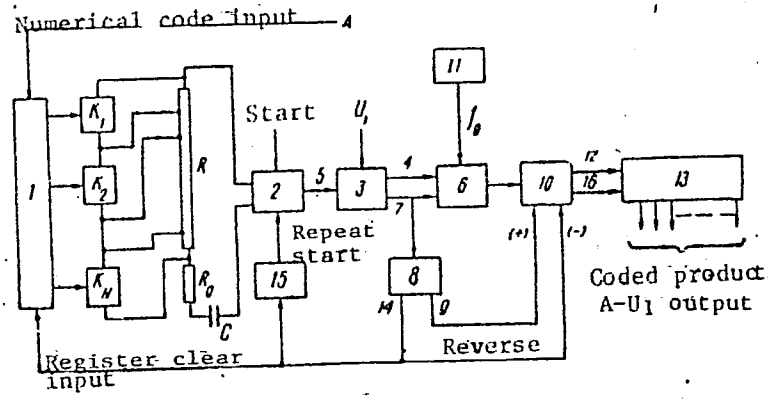

Fig. 1. Block diagram of analog-digital multiplier unit

the 10-bit counter output (13). The multiplier is a modification of a previous model whose operation was based on the first half of the described two-part cycle. The permissible range of the digitally encoded multiplication factor is increased

APPROVED FOR RELEASE: 08/24/2000 CIA-RDP86-00513R001651210016-8"

"APPROVED FOR RELEASE: 08/24/2000 CIA-RDP86-00513R001651210016-8

ACC NR: AP6031014

by a factor of 100 at the expense of operating speed which is decreased by half. The accuracy of the results is unchanged. Orig. art. has: 3 figures. [BD]

SUB CODE: 09/ SUBM DATE: 07Sep65/ ORIG REF: 001/ ATD PRESS: 5078

Card 3/3

APPROVED FOR RELEASE: 08/24/2000 CIA-RDP86-00513R001651210016-8"

"APPROVED FOR RELEASE: 08/24/2000 CIA-RDP86-00513R001651210016-8

L 47[illegible]/66 [illegible]/EWP(1) IJP(c) 88/GG

ACC NR: AP6030623 SOURCE CODE: UR/0413/66/000/016/0110/0110

INVENTOR: Bekmuratov, T. F.; Malinovskiy, B. N.; Skuridin, V. P.

ORG: none

50
B

TITLE: Multiplier. Class 42, No. 185120 [announced by Cybernetics Institute AN UkrSSR (Institut kibernetiki AN USSR)]

SOURCE: Izobreteniya, promyshlennyye obraztsy, tovarnyye znaki, no. 16, 1966, 110

TOPIC TAGS: electron multiplier, analog digital converter, analog factor, comparison circuit, digital resistor, voltage generator

ABSTRACT: The proposed multiplier shown in Fig. 1 has a digital output and an analog-to-digital converter which fills an interval of time proportionate to the value of the analog factor. The converter includes a generator of linearly variable voltage, a comparison circuit, a valve, a counter, and a controlled digital resistor. To simplify the device, the digital resistor controlled by the digital factor code is connected in parallel to a time-setting capacitor in the circuit of the generator of linearly variable voltage. Orig. art. has: 1 figure. [Translation] [DW]

Card 1/2 UDC: 681.142.07

APPROVED FOR RELEASE: 08/24/2000 CIA-RDP86-00513R001651210016-8"

"APPROVED FOR RELEASE: 08/24/2000 CIA-RDP86-00513R001651210016-8

L 47371-66

ACC NR: AP6030622

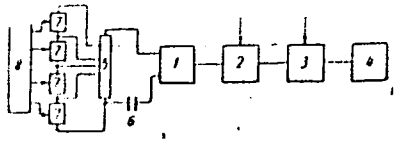

Fig. 1. Multiplier.
1—Generator of linearly variable voltage; 2—comparison circuit; 3—valve; 4—counter; 5—controlled digital resistor; 6— time-setting capacitor; 7— register valves; 8—digital factor register

SUB CODE: 09/ SUBM DATE: 16Feb65/

Card 2/2 mjs

APPROVED FOR RELEASE: 08/24/2000 CIA-RDP86-00513R001651210016-8"

"APPROVED FOR RELEASE: 08/24/2000 CIA-RDP86-00513R001651210016-8

ACC NR: AT6023384 (N) SOURCE CODE: UR/0000/65/000/000/0137/0142

AUTHOR: Savel'yev, B. N. (Sverdlovsk); Skuridin, V. P. (Sverdlovsk)

ORG: none

TITLE: Certain problems in the design of "shaft revolution number" converters with intermediate phase shift

SOURCE: Vsesoyuznaya konferentsiya po avtomaticheskomu kontrolyu i metodam elektricheskikh izmereniy. 5th, Novosibirsk, 1963. Avtomaticheskiy kontrol'i metody elektricheskikh izmereniy; trudy konferentsii, t. I: Metody elektricheskikh izmereniy. Tsifrovyye izmeritel'nyye pribory. Elementy izmeritel'nykh sistem (Automatic control and electrical measuring techniques; transactions of the conference. v. 1: Electrical measuring techniques. Digital measuring instruments. Elements of measuring systems). Novosibirsk, Izd-vo Nauka, 1965, 137-142

TOPIC TAGS: analog digital encoder, phase measurement, analog digital converter, error correction

ABSTRACT: The errors in shaft rotation-to-number converts are analyzed and two proposals are made to reduce them. The main source of errors in converters which represent the shaft rotation in terms of a phase difference of two voltages converted to a time interval filled by pulses from the clock generator are: the instability of the clock and the frequency of the voltage powering the phase shifter, and the instability of the zero crossing detector threshold level. To decrease the frequency instability,

Card 1/2

APPROVED FOR RELEASE: 08/24/2000 CIA-RDP86-00513R001651210016-8"

"APPROVED FOR RELEASE: 08/24/2000 CIA-RDP86-00513R001651210016-8

ACC NR: AT6023384

the authors suggest that the phase shifter be powered by the voltage derived from the clock generator. The clock frequency should be divided by an appropriate amount, and the output pulses from the last divider stage should be reshaped by regenerative broadening circuits to reduce the effect of transmission delay. To reduce the threshold instability, the authors present a tube circuit with transformer feedback which has a threshold of 0.5V. The substitution of tubes and the variation of filament voltages from 5.8 to 6.8V cause the threshold level to vary by ±0.05 and 0.2V, respectively. However, since both the reference and the shifted voltages pass through similar circuits, the effective error is only ±0.6' when the anode and the input voltages are changed by ±10%. Orig. art. has: 4 figures.

SUB CODE: 09,13/ SUBM DATE: 20Sep65/ ORIG REF: 002

Card 2/2

APPROVED FOR RELEASE: 08/24/2000 CIA-RDP86-00513R001651210016-8"

"APPROVED FOR RELEASE: 08/24/2000 CIA-RDP86-00513R001651210016-8

SKURIDIN, V.V.

Mechanization of the unloading, stacking up and conveying of raw materials at the No.3 Wodden-Box Plant of the "Promtara" Trust. Trudy NIL Tary no.4:15-29 '60. (MIRA 14:12)
(Woodworking industries)
(Materials Handling)

APPROVED FOR RELEASE: 08/24/2000 CIA-RDP86-00513R001651210016-8"

"APPROVED FOR RELEASE: 08/24/2000 CIA-RDP86-00513R001651210016-8

SKURIKHIN, A.F.

Steam preparation of potatoes for dehydration at the Domanovichi Vegetable Dehydration Plant. Kons. i ov. prom. 13 no.3:4-6 Mr '58. (MIRA 11:4)

1. Domanovichskiy ovoshchesushil'nyy zavod.
(Potatoes--Drying)

APPROVED FOR RELEASE: 08/24/2000 CIA-RDP86-00513R001651210016-8"

"APPROVED FOR RELEASE: 08/24/2000 CIA-RDP86-00513R001651210016-8

SKURIKHIN, A.F.

Continuous blancher for cabbage. Kons. i ov. prom. 13 no.4:11-12 Ap '58. (MIRA 11:4)

1. Donanovichskiy ovoshchesushil'nyy zavod.
(Cabbage--Drying)
(Canning and preserving--Equipment and supplies)

APPROVED FOR RELEASE: 08/24/2000 CIA-RDP86-00513R001651210016-8"

"APPROVED FOR RELEASE: 08/24/2000 CIA-RDP86-00513R001651210016-8

SKURIKHIN, A.F.; SHCHERBIN, A.G.

Efficiency promoters of Domanovichskiy Vegetable Dehydrating Plant. Kons. i ov. prom. 13 no.9:16-17 S '58. (MIRA 11:10)

1. Domanovichskiy ovoshchesushil'nyy zavod.
(Vegetables--Drying)

APPROVED FOR RELEASE: 08/24/2000 CIA-RDP86-00513R001651210016-8"

"APPROVED FOR RELEASE: 08/24/2000 CIA-RDP86-00513R001651210016-8

SKURIKHIN, A.F.

Mechanized sorting of dried vegetables and potatoes. Kons. i ov. prom. 14 no.10:20-21 O '59. (MIRA 12:12)

1.Maloritskiy ovoshchesushil'nyy zavod.
(Canning and preserving--Equipment and supplies)

APPROVED FOR RELEASE: 08/24/2000 CIA-RDP86-00513R001651210016-8"

"APPROVED FOR RELEASE: 08/24/2000 CIA-RDP86-00513R001651210016-8

SKURIKHIN, A.F.; SHAKH, V.A.

Experience in manufacturing apple juice at the Malorita Vegetable Dehydrating Plant. Kons.i ov.prom. 15 no.4:15-16 Ap '60. (MIRA 13:6)

1. Maloritskiy ovoshchesushil'nyy zavod.
(Malorita--Apple juice)

APPROVED FOR RELEASE: 08/24/2000 CIA-RDP86-00513R001651210016-8"

"APPROVED FOR RELEASE: 08/24/2000 CIA-RDP86-00513R001651210016-8

SKURIKHIN, A.F.

Utilization of means available inside the factory. Kons.i ov.prom. 15 no.10:9-10 O '60. (MIRA 13:10)

1. Maloritskiy ovoshchesushil'nyy zavod.
(Malorita--Canning and preserving)

APPROVED FOR RELEASE: 08/24/2000 CIA-RDP86-00513R001651210016-8"

"APPROVED FOR RELEASE: 08/24/2000 CIA-RDP86-00513R001651210016-8

SKURIKHIN, A.F.

We are on the precongress watch. Kons. i ov. prom. 16 no.7: 10-11 Jl '61. (MIRA 14:8)

1. Gantsevichskiy ovoshchesushil'nyy zavod.
(Gantsevichi--Fruit, Dried)

APPROVED FOR RELEASE: 08/24/2000 CIA-RDP86-00513R001651210016-8"

"APPROVED FOR RELEASE: 08/24/2000 CIA-RDP86-00513R001651210016-8

SKURIKHIN, A.F.

More about the water-and-steam preparation of potatoes for drying. Kons.i ov.prom. 17 no.5:9-10 My '62. (MIRA 15:5)

1. Gantsevichskiy ovoshchesushil'nyy zavod.
(Potatoes--Drying)

APPROVED FOR RELEASE: 08/24/2000 CIA-RDP86-00513R001651210016-8"

"APPROVED FOR RELEASE: 08/24/2000 CIA-RDP86-00513R001651210016-8

KHUSID, M.Ye.; SKURIKHIN, A.F.

Ways of increasing the production of canned food. Kons.i ov.prom. 17 no.7:36 Jl '62. (MIRA 15:6)

1. Sovnarkhoz Belorusskoy SSR i Gantsevichskiy ovoshchesushil'nyy zavod.

(White Russia--Canning industry)

APPROVED FOR RELEASE: 08/24/2000 CIA-RDP86-00513R001651210016-8"

"APPROVED FOR RELEASE: 08/24/2000 CIA-RDP86-00513R001651210016-8

KURGIKHIN, A.F.

Experience in the utilization of the heat of exhaust gases from a boiler room. Kons. i ov. prom. 17 no.8:13-14 Ag '62. (MIRA 17:1)

1. Gantsevichskiy ovoshchesushil'nyy zavod.

APPROVED FOR RELEASE: 08/24/2000 CIA-RDP86-00513R001651210016-8"

"APPROVED FOR RELEASE: 08/24/2000 CIA-RDP86-00513R001651210016-8

SKURIKHIN, A.F.

Improve the procurement of cranberries. Kons. i ov. prom. no.7: 32-33 Jl '63. (MIRA 16:9)

1. Gantsevichskiy ovoshchesushil'nyy zavod.

APPROVED FOR RELEASE: 08/24/2000 CIA-RDP86-00513R001651210016-8"

"APPROVED FOR RELEASE: 08/24/2000 CIA-RDP86-00513R001651210016-8

SKURIKHIN, A.S. (Irkutsk)

New work methods in the section. Zhel.dor.transp. 43 no.12:57-63 D '61. (MIRA 15:1)

1. Nachal'nik Irkutskogo otdeleniya Vostochno-Sibirskoy dorogi.
(Railroads--Labor productivity)
(Railroads--Management)

APPROVED FOR RELEASE: 08/24/2000 CIA-RDP86-00513R001651210016-8"

"APPROVED FOR RELEASE: 08/24/2000 CIA-RDP86-00513R001651210016-8

SKURIKHIN, A.V. (g.Kotel'nich, Kirovskoy oblasti)

Family of karlov physicians. Zdorov'e 2 no.5:9 My '56. (MLRA 9:8)
(PHYSICIANS)

APPROVED FOR RELEASE: 08/24/2000 CIA-RDP86-00513R001651210016-8"

"APPROVED FOR RELEASE: 08/24/2000 CIA-RDP86-00513R001651210016-8

YUR'YEV, V.I.; POZIN, S.S.; SKURIKHINA, G.M.

Studying the adsorption and electrokinetic characteristics of sulfite and sulfate celluloses in relation to aluminum salt solutions. Trudy LTA no.91:11-20 '60. (MIRA 15:12)

1. Leningradskaya lesotekhnicheskaya akademiya imeni Kirova.

(Cellulose—Electric properties)
(Aluminum salts) (Adsorption)

APPROVED FOR RELEASE: 08/24/2000 CIA-RDP86-00513R001651210016-8"

"APPROVED FOR RELEASE: 08/24/2000 CIA-RDP86-00513R001651210016-8

YERMOLAYEV, A.;KAL'NEV, F.;MIKHAYLOV, M.;NEUPOKOYEV, A.;OGURTSOV, S.;
POLOSUKHIN, V.;PUZAKOVA, V.;RYBAL'CHENKO, N.;SKURIKHIN, I.

Open letter to Comrade A. A. Ishkov, Minister of the Fishing Industry of the U.S.S.R. Sots trud no.3:121-122 Mr '57. (MLRA 10:4)

1. Inzhenery po tekhnormirovaniyu predpriyatiy Glav-komchatrybproma.
(Fisheries)

APPROVED FOR RELEASE: 08/24/2000 CIA-RDP86-00513R001651210016-8"

"APPROVED FOR RELEASE: 08/24/2000 CIA-RDP86-00513R001651210016-8

STARTSEV, D.; KOLESNEV, S., zasluzhennyy deyatel' nauki; BOYEV, V.; KHOROKHORIN, D.; SKURIKHIN, I.; KHOKHLOV, Ye.; BUYANOV, I., dvazhdy Geroy Sotsialisticheskogo Truda; TROFIMOV, A.; STEPANOV, N.; FEDOTOV, S.

The road toward new achievements. Sots. trud. no.4:14-36 Ap '58. (MIRA 11:4)

1. Starshiy ekonomist TSentral'nogo planovo-ekonomicheskogo upravleniya Ministerstva sel'skogo khozyaystva SSSR (for Startsev). 2. Chlen-korrespondent Vsesoyuznoy akademii sel'skokhozyaystvennykh nauk im. V.I. Lenina (for Kolesnev). 3. Zaveduyushchiy sektorom ekonomicheskogo stimulirovaniya sel'skokhozyaystvennogo proizvodstva Vsesoyuznoy akademii sel'skokhozyaystvennykh nauk im. V.I. Lenina (for Boyev). 4. Zaveduyushchiy sel'skokhozyaystvennym otdelom Moskovskogo komiteta Kommunisticheskoy partii Sovetskogo Soyuza (for Khorokhorin). 5. Zaveduyushchiy kafedroy ekonomiki i organizatsii sel'skokhozyaystvennogo proizvodstva Ivanovskogo sel'skokhozyaystvennogo instituta (for Skurikhin). 6. Nachal'nik Spetsial'nogo konstruktorskogo byuro zavoda sel'khozmashin im. Ukhtomskogo (for Khokhlov). 7. Predsedatel' kolkhoza "Vernyy put'," Ivanovskogo rayona, Ivanovskoy oblasti (for Trofimov). 8. Glavnyy agronom Ramenskoy mashinno-traktornoy stantsii (for Stepanov). 9. Sekretar' partiynoy organizatsii Ramenskoy mashinno-traktornoy stantsii (for Fedotov). 10. Predsedatel' kolkhoza im. Vladimira Il'icha (for Buyanov).

(Machine-tractor stations) (Collective farms)

APPROVED FOR RELEASE: 08/24/2000 CIA-RDP86-00513R001651210016-8"

"APPROVED FOR RELEASE: 08/24/2000 CIA-RDP86-00513R001651210016-8

SKURIKHIN, I.M.

USSR/Chemical Technology - Chemical Products and Their Application. Fermentation Industry. I-12

Abs Jour : Ref Zhur - Khimiya, No 1, 1958, 2893

Author : Skurikhin, I.M.

Inst : All-Union Scientific Research Institute of Wine Making and Viniculture

Title : Chemical Processes on Aging of Brandy Alcohols in Oak Barrels

Orig Pub : Tr. Vses. n.-i. in-ta vinodeliya i vinogradarstva, 1957, No 5, 69-90

Abstract : Among the components of oak wood of greatest importance, in the maturation of the alcohol, is the lignin, on ethanolysis of which by the action of the acids present in the alcohol, aromatic aldehydes are formed according to the scheme: coniferyl alcohol $\rightarrow$ coniferyl aldehyde $\xrightarrow{+O_2}$

Card 1/4

APPROVED FOR RELEASE: 08/24/2000 CIA-RDP86-00513R001651210016-8"

USSR/Chemical Technology - Chemical Products and Their Application. Fermentation Industry. I-12

Abs Jour : Ref Zhur - Khimiya, No 1, 1958, 2893

$\xrightarrow{+O_2}$ vanillin. At the same time there is formed ethanol-lignin which improves the taste of the brandy. On aging of the alcohols a hydrolysis of hemicelluloses of the oaken staves takes place, with formation of monosaccharides which mellow the taste of the aocohol. An alcohol that was aged for fifteen years contained 1 g/liter of monosaccharides, which included glucose and xylose. Xylose, arabinose and glucose were found in alcohol aged for five years. The sugars were identified by paper chromatography. The disappearance of xylose on prolonged aging is due to its dehydrogenation to furfurol. Tanning agents, which are extracted from the staves most intensely during the first years of aging, undergo oxidation. In the course thereof their gustatory characteristics are drastically improved. Determination of tannides by the method of Neubayer-Leventhal gives values that are too low, due to

Card 2/4

"APPROVED FOR RELEASE: 08/24/2000 CIA-RDP86-00513R001651210016-8

USSR/Chemical Technology - Chemical Products and Their Application. Fermentation Industry. I-12

Abs Jour : Ref Zhur - Khimiya, No 1, 1958, 2893

During aging of alcohols, oxygen is required since it is used up to oxidize the components of lignin (coniferyl aldehyde breaks down at the second bond, to give vanillin), the tanning agents, and in other reactions which enhance the quality. The process of aging of alcohols is divided in 3 periods: of ordinary brandy aged up to 5 years, aged brandy up to 10 years and old brandy aged for more than 10 years. Methods of acdelerating the maturation of brandy are considered. For an induced aging of the wood use can be made of preliminary treatment thereof with acid or alkali. In such cases the aging of alcohols is carried out at a temperature not exceeding 35° in order to prevent a deterioration of their quality.

Bibliography 32 references.

Card 4/4

APPROVED FOR RELEASE: 08/24/2000 CIA-RDP86-00513R001651210016-8"

"APPROVED FOR RELEASE: 08/24/2000 CIA-RDP86-00513R001651210016-8

GAVRILOV, Nikolay Vasil'yevich; SKURIKHIN, Igor' Mikhaylovich; DZHANPOLADYAN, L.M., retsenzent; KHOROSHILOV, F.N., retsenzent; KRUGLOVA, G.I., red.; KISINA, Ye.I., tekhn. red.

[Brandy industry] Kon'iachnoe proizvodstvo. Moskva, Pishchepromizdat, 1959, 78 p. (MIRA 14:7)
(Brandy)

APPROVED FOR RELEASE: 08/24/2000 CIA-RDP86-00513R001651210016-8"

"APPROVED FOR RELEASE: 08/24/2000 CIA-RDP86-00513R001651210016-8

NILOV, Vasiliy Ivanovich; SKURIKHIN, Igor' Mikhaylovich

[Chemistry of wine making and brandy production] Khimiia vinodeliia i kon'yachnogo proizvodstva. Moskva, Pishchepromizdat, 1960. 322 p. (MIRA 14:3)
(Wine and wine making) (Brandy)

APPROVED FOR RELEASE: 08/24/2000 CIA-RDP86-00513R001651210016-8"

"APPROVED FOR RELEASE: 08/24/2000 CIA-RDP86-00513R001651210016-8

SKURIKHIN, I.M.

Intentisy of the flavor and organoleptic characteristics of some bouquet-forming substances of cognac and wines. Izv.vys.ucheb.zav.; pishch.tekh. no.1:82-87 '63. (MIRA 16:3)

1. Vsesoyuznyy nauchno-issledovatel'skiy institut vinodeliya i vinogradarstva "Magarach", laboratoriya khimii vinodeliya.
(Wine and wine making--Analysis)

APPROVED FOR RELEASE: 08/24/2000 CIA-RDP86-00513R001651210016-8"

"APPROVED FOR RELEASE: 08/24/2000 CIA-RDP86-00513R001651210016-8

SKURIKHIN, I.M.; YEFIMOV, B.N.

Transformation of the extract components in brandy alcohols during aging. Izv. vys. ucheb. zav.; pishch. tekh. no.6:26-30 '63. (MIRA 17:3)

1. Vsesoyuznyy nauchno-issledovatel'skiy institut vinodeliya i vinogradarstva "Magarach", laboratoriya khimii vinodeliya.

APPROVED FOR RELEASE: 08/24/2000 CIA-RDP86-00513R001651210016-8"

"APPROVED FOR RELEASE: 08/24/2000 CIA-RDP86-00513R001651210016-8

SKURIKHIN, I.M.

Accelerating the maturing of cognac alcohols and similar alcoholic liquors. Biokhim. vin. no.7:189-207 '63. (MIRA 16:4)

1. Vsesoyuznyy nauchno-issledovatel'skiy institut vinodeliya i vinogradarstva "Magarach".
(Brandy)

APPROVED FOR RELEASE: 08/24/2000 CIA-RDP86-00513R001651210016-8"

"APPROVED FOR RELEASE: 08/24/2000 CIA-RDP86-00513R001651210016-8

SKURIKHIN, I.M.; YEFIMOV, B.N.

Studying the systems of preliminary processing of oak wood used for the acceleration of the aging of brandy alcohols. Trudy VNIIViV "Magarach" 13:123-142 '64. (MIRA 17:12)

APPROVED FOR RELEASE: 08/24/2000 CIA-RDP86-00513R001651210016-8"

"APPROVED FOR RELEASE: 08/24/2000 CIA-RDP86-00513R001651210016-8

SIRBILADZE, Akakiy Luarsabovich; SKURIKHIN, I.M., kand. tekhn. nauk, retsenzent; AGABAL'YANTS, G.G., prof., spets. red.; ZYABREVA, S.M., red.

[Fundamentals of the technology of brandy making] Osnovy tekhnologii kon'iaka. Moskva, Pishchevaia promyshlennost', 1965. 74 p. (MIRA 18:3)

APPROVED FOR RELEASE: 08/24/2000 CIA-RDP86-00513R001651210016-8"

"APPROVED FOR RELEASE: 08/24/2000 CIA-RDP86-00513R001651210016-8

TYURIN, Sergey Timofeyevich, kand. tekhn. nauk; BAZANOVA, Adelaida Ivanovna, nauchn. sotr.; IL'CHENKO, Boris Nikolayevich, nauchn. sotr.; AVDEYEVA, A.V., doktor tekhn. nauk, prof., retsenzent; SKURIKHIN, I.M., kand. tekhn. nauk, retsenzent; CHERNYAVSKIY, N.F., inzh.-konstruktor, retsenzent; SEBKO, G., red.; VASIL'YEV, I., red.

[Protective coatings of containers in wine making] Zashchitnye pokrytiia rezervuarov v vinodelii. Simferopol', Izd-vo "Krym," 1965. 103 p. (MIRA 18:5)

1. Zaveduyushchiy laboratoriyey Vsesoyuznogo nauchno-issledovatel'skogo instituta vinodeliya i vinogradarstva "Magarach" (for Tyurin). 2. Laboratoriya Vsesoyuznogo nauchno-issledovatel'skogo instituta vinodeliya i vinogradarstva "Magarach" (for Bazanova, Il'chenko).

APPROVED FOR RELEASE: 08/24/2000 CIA-RDP86-00513R001651210016-8"

"APPROVED FOR RELEASE: 08/24/2000 CIA-RDP86-00513R001651210016-8

SKURIKHIN, I.M.; NILOV, V.V.; LEDENKOVA, T.P.

Quantitative determination of aliphatic and aromatic aldehydes in the form of 2,4-dinitrophenyl hydrazones. Prikl. biokhim. i mikrobiol. 1 no. 6:675-679 N-D '65. (MIRA 18:12)

1. Vsesoyuznyy nauchno-issledovatel'skiy institut vinodeliya i vinogradarstva "Magarach". Submitted April 19, 1965.

APPROVED FOR RELEASE: 08/24/2000 CIA-RDP86-00513R001651210016-8"

"APPROVED FOR RELEASE: 08/24/2000 CIA-RDP86-00513R001651210016-8

1. SKURIKHIN, I. P.

2. USSR (600)

4. Agriculture

7. Let us set up a stable feed base for livestock-raising on collective farms. Ivanovo, Ivgiz, 1951.

9. Monthly List of Russian Accessions, Library of Congress, January, 1953. Unclassified.

APPROVED FOR RELEASE: 08/24/2000 CIA-RDP86-00513R001651210016-8"

"APPROVED FOR RELEASE: 08/24/2000 CIA-RDP86-00513R001651210016-8

ORLOV, V.P., kand.sel'skokhoz.nauk. Prinimali uchastiye: AVROV, N.N.; BASENKO, P.V.; VARLAMOV, D.A.; VASIL'YEV, I.I.; VLASOV, V.N.; VYLEGZHANINA, V.A.; ZHIVET'YEV, V.G.; ZAVADSKIY, I.S.; ZALESSKIY, Ye.Ya.; ZAKORYUKIN, D.S.; ISHCHENKO, I.N.; KACHIBAYA, I.D.; KISE-LEV, Ye.S.; KOZHEVNIKOV, I.Z.; LISITSYN, V.I.; MESHCHERYAKOV, V.F.; NYURIN-VERTSBERG, R.L.; PEREPELITSA, V.M.; RYABKOV, A.D.; SKURIKHIN, I.P.; SOLOV'YEV, N.A.; YAS'KO, N.G.. GREBTSOV, P.P., red.; ZUBRILINA, Z.P., tekhn.red.

[Our farms in 1965] Nashi khoziaistva v 1965 godu. Moskva, Gos. izd-vo sel'khoz.lit-ry, 1959. 230 p. (MIRA 13:2)
(Agriculture)

APPROVED FOR RELEASE: 08/24/2000 CIA-RDP86-00513R001651210016-8"

"APPROVED FOR RELEASE: 08/24/2000 CIA-RDP86-00513R001651210016-8

MOLCHANOVA, O.P., prof.; LOBANOV, D.I., prof.; MARSHAK, M.S., prof.; GANETSKIY, I.D.; BEREZIN, N.I., laureat Stalinskoy premii; KONNIKOV, A.G., laureat Stalinskoy premii; LIFSHITS, M.O.; METLITSKIY, L.V., doktor sel'skokhoz.nauk; NAMESTNIKOV, A.F., kand.tekhn.nauk. Prinimali uchastiye: ANAN'YEV, A.A.; GROZNOV, S.R.; YEFIMOV, V.P.; KIKNADZE, N.S.; NIKASHIN, F.P.; PIROGOV, N.M.; SKRIPKIN, G.M.; TSYPLENKOV, N.P. SIVOLAP, I.K., red.; SKURIKHIN, M.A., red.; BETSOFEN, Ya.I., red.; DAMASKINA, G.B., red.; PRITYKINA, L.A., red.; KISINA, Ye.I., tekhn.red.

[Book on tasty and healthy food] Kniga o vkusnoi i zdorovoi pishche. Moskva, Pishchepromizdat, 1961. 423 p. (MIRA 15:2)

1. Chlen-korrespondent AMN SSSR (for Molchanova).
(Cookery)

APPROVED FOR RELEASE: 08/24/2000 CIA-RDP86-00513R001651210016-8"

"APPROVED FOR RELEASE: 08/24/2000 CIA-RDP86-00513R001651210016-8

SKURIDIN, M.A.; KUDRYAVTSEV, L.A.

Combined single-profile testing of gears at operating loads and speeds. Izm.tekh. no.7:1-3 Jl '61. (MIRA 14:6)
(Gearing—Testing)

APPROVED FOR RELEASE: 08/24/2000 CIA-RDP86-00513R001651210016-8"

"APPROVED FOR RELEASE: 08/24/2000 CIA-RDP86-00513R001651210016-8

INIKHOV, G.S., zasl. deyatel' nauki i tekhniki, doktor khim. nauk, prof.; SKORODUMOVA, A.M.,kand. biol. nauk; SHAPIRO, L.R. [deceased]; MILYUTINA, L.A., inzh.; DEMUROV, M.G., kand. sel'khoz. nauk; LEBEDEVA, K.S.,kand.sel'khoz.nauk;KYURKCHAN,V.N.; VASILEVSKIY, V.G., inzh.; SAVINOVSKIY, N.G., kand. tekhn. nauk; VEDRASHKO, V.F., kand.med. nauk; SOKOLOVSKIY, V.P., prof.; BEGUNOV, V.L., inzh.; KAZENNOVA, A.R.; VEDRASHKO, V.F., kand. med. nauk; KOSTYGOV, V.V., red.; SKURIKHIN, M.A., MOLCHANOVA, O.P., doktor biol. nauk, prof.; SPERANSKIY, G.N., zasl. deyatel' nauki , doktor med. nauk, prof.; KISINA, Ye.I., tekhn. red.

[Dairy foods]Molochnaia pishcha. Moskva, Pishchepromizdat, 1962. 419 p. (MIRA 15:10)

1. Glavnyy kulinar Ministerstva torgovli RSFSR (for Kazennova). 2. Chlen-korrespondent Akademii meditsinskikh nauk SSSR (for Speranskiy, Skurikhin). 3. Deystvitel'nyy chlen Akademii meditsinskikh nauk SSSR (for Molchanova).
(Cookery (Dairy products)) (Dairy products)

APPROVED FOR RELEASE: 08/24/2000 CIA-RDP86-00513R001651210016-8"

"APPROVED FOR RELEASE: 08/24/2000 CIA-RDP86-00513R001651210016-8

SKURIKHIN, N., inzh.

Develop automatic control of fire extinction equipment. Pozh. delo 4 no. 7:20 Jl '58. (MIRA 11:8)
(Fire departments--Equipment and supplies)
(Automatic control)

APPROVED FOR RELEASE: 08/24/2000 CIA-RDP86-00513R001651210016-8"

"APPROVED FOR RELEASE: 08/24/2000 CIA-RDP86-00513R001651210016-8

SKURIKHIN, N.F.

Designing foundations for small equipment. Osn., fund.i mekh.grun. 2 no.4:30 '60. (MIRA 13:7)
(Machinery—Foundations)

APPROVED FOR RELEASE: 08/24/2000 CIA-RDP86-00513R001651210016-8"

"APPROVED FOR RELEASE: 08/24/2000 CIA-RDP86-00513R001651210016-8

SKURIKHIN, N.F.; SHOR, R.M.; GOL'TSEN, I.I.; METELKIN, A.I.; BOGDANOV, I.V.

Conference of leather specialists on the problem of automation and mechanization of the operations in leather manufacture. Kozh.-obuv.prom. 6 no.1:10-19 Ja '64. (MIRA 17:4)

1. Glavnyy spetsialist Gosudarstvennogo proyektnogo instituta No.2 (for Skurikhin). 2. Gosudarstvennyy proyektnyy institut No.2 (for Bogdanov). 3. Kiyevskiy kozhevennyy kombinat (for Shor).. 4. Moskovskiy kozhevennyy zavod (for Gol'tsen). 5. TSentral'nyy nauchno-issledovatel'skiy institut kozhevenno-obuvnoy promyshlennosti (for Metelkin).

APPROVED FOR RELEASE: 08/24/2000 CIA-RDP86-00513R001651210016-8"

"APPROVED FOR RELEASE: 08/24/2000 CIA-RDP86-00513R001651210016-8

SKURIKHIN, N.I.

Severe chronic recurrent urticaria secondary to polyvalent sensitization. Vest.derm. i ven. 34 no.10:82-83 '60. (MIRA 13:11)

(URTICARIA)

APPROVED FOR RELEASE: 08/24/2000 CIA-RDP86-00513R001651210016-8"

"APPROVED FOR RELEASE: 08/24/2000 CIA-RDP86-00513R001651210016-8

SKURIKHIN,P. (d. Bremino, Verkhne-Irmenskiy rayon, Novosibirskoy oblasti)

What we want. Radio no.6:29 Je '55. (MLRA 8:8)
(Bremino--Radio)

APPROVED FOR RELEASE: 08/24/2000 CIA-RDP86-00513R001651210016-8"

"APPROVED FOR RELEASE: 08/24/2000 CIA-RDP86-00513R001651210016-8

Cand. Technical Sci.

SKURIKHIN, V. I., Engineer

"Retardation of Transient Processes in a Generator Motor System With Direct Current in the Main Circuit." Sub 26 Jun 51, Moscow Order of Lenin Power Engineering Inst imeni V. M. Molotov

Dissertations presented for science and engineering degrees in Moscow during 1951.

SO: Sum. No. 480, 9 May 55

APPROVED FOR RELEASE: 08/24/2000 CIA-RDP86-00513R001651210016-8"

"APPROVED FOR RELEASE: 08/24/2000 CIA-RDP86-00513R001651210016-8

Skurikhin, V. I.

FD-1749

USSR/Engineering - Regulation

Card 1/2 : Pub. 10-8/12

Author : Belyayev, I. V. (docent); Borisov, V. A. (docent); Skurikhin, V. I.; Zakharov, M. F.; Krylov, M. A. (all Candidates of Technical Sciences)

Title : Discussion on the article "Development of Automatics and Telemechanics in the Fifth Five-Year Plan"

Periodical : Avtom. i telem., Vol. 16, 203-205, Mar-Apr 1955

Abstract : In a letter by a group of scientists from the Leningrad Electrical Engineering Institute, "Development of Automatics and Telemechanics in the 5th 5-Year Plan," published in No 2, 1953, ibid., a number of important questions were posed: The serial (mass) production of typical automatic and telemeter apparatuses for industry, agriculture, and scientific resinstitutions; expansion and teaching of specialists in the planning, designing, manufacturing, and exploitation of automatic and telemeter equipment; strengthening of connection between individual institutions and other organizations concerned with automatics and telemechanics. Actively engaged at Leningrad Electrical Engineering Institute in these problems are Professors N. K. Bogoroditskiy, D. V. Vasil'yev, S. A. Rinkevich, V. I. Ivanov, and others. Special courses already formed are: Principles of telemechanics, Principles of automatization, Regulation of electric drives, Electrical power stations, networks and systems, Relay protection and automatization of electrical power systems,

TRANS M-1312.
19 Nov 56

APPROVED FOR RELEASE: 08/24/2000 CIA-RDP86-00513R001651210016-8"

"APPROVED FOR RELEASE: 08/24/2000 CIA-RDP86-00513R001651210016-8

FD-1749

Card 2/2

Automatization of industrial processes, electrical equipping of industrial mechanisms, Electrification of enterprises, etc.

Institution : Ivanov Electric Power Institute im. Lenin [Ivanovskiy energeticheskiy institut im. V. I. Lenina]

Submitted : -

APPROVED FOR RELEASE: 08/24/2000 CIA-RDP86-00513R001651210016-8"