"APPROVED FOR RELEASE: Thursday, September 26, 2002 CIA-RDP86-00513R001446510003-7
APPROVED FOR RELEASE: Thursday, September 26, 2002 CIA-RDP86-00513R001446510003-7"

RYSEVA, S.N., inzh.

Economic efficiency of using synthetic fibers in the assortment of wool fabrics. Nauch.-issl.trudy TSNIIShersti no.18:153-164 '63. (MIRA 18:1)

"APPROVED FOR RELEASE: Thursday, September 26, 2002 CIA-RDP86-00513R001446510003-7
APPROVED FOR RELEASE: Thursday, September 26, 2002 CIA-RDP86-00513R001446510003-7"

RYSEVA, V. I.

USSR/Metals
Steel - Hardness
Dies - Hardening

Mar/Apr 47

"Influence of Hardness of Steel on the Resistance of Pressed Dies and Drills," A. K. Chertavskikh, Cand Tech Sci, V. I. Ryseva, V. V. Yakovlev, GiproTsvetMetObrabotka, 3½ pp

"Tsvetnye Metally" No 2

Discussion of results of experiments on the influence of hardness of steel on resistance of pressed dies and drills. Tables are presented of the results of using steel of various types as well as steel which has been reworked from old dies and drills.

PA 28T64

"APPROVED FOR RELEASE: Thursday, September 26, 2002 CIA-RDP86-00513R001446510003-7
APPROVED FOR RELEASE: Thursday, September 26, 2002 CIA-RDP86-00513R001446510003-7"

PA 169T47

RYSEVA, V. I.

USSR/Metals - Testing, Equipment Aug 50

"Checking a Tribometer for Determination of External Friction of Metals," A. K. Chartavskiy, V. I. Ryseva, Sci Res Inst for Processing Non-ferrous Metals.

"Zavod Lab" Vol XVI, No 8, pp 1017-1018

Describes tribometer constructed by I. V. Kragel'skiy and improved by V. D. Sedov and V. V. Sedova. Deals with experiments for studying relation between the friction coefficient and thickness and chemical nature of oxide films on surfaces. Coefficients of external friction for Cu and Ni in pairs with steel balls of d = 7.2 mm were determined. Simultaneously, Cu rods were drawn through pobedit die for comparing coefficient of friction with drawing force.

PA 169T47.

"APPROVED FOR RELEASE: Thursday, September 26, 2002 CIA-RDP86-00513R001446510003-7
APPROVED FOR RELEASE: Thursday, September 26, 2002 CIA-RDP86-00513R001446510003-7"

RYSEVA, Ye.S., starshiy nauchnyy sotrudnik

"Blood transfusion in the struggle for life and health" by P.M.Maksimov. Reviewed by E.S.Ryseva. Med.sestra 16 no.6:26 Je '57. (MLRA 10:8)

(BLOOD--TRANSFUSION) (MAKSIMOV, P.M.)

"APPROVED FOR RELEASE: Thursday, September 26, 2002 CIA-RDP86-00513R001446510003-7
APPROVED FOR RELEASE: Thursday, September 26, 2002 CIA-RDP86-00513R001446510003-7"

RYSEVA, Ye.S.

Session on rheumatic fever in children. Vest.AMN SSSR 13 no.8:57-61 '58 (MIRA 11:8)

(RHEUMATIC FEVER)

"APPROVED FOR RELEASE: Thursday, September 26, 2002 CIA-RDP86-00513R001446510003-7
APPROVED FOR RELEASE: Thursday, September 26, 2002 CIA-RDP86-00513R001446510003-7"

RYSEVA, Ye.S., dots.

Status of the cardiovascular system in tuberculous meningitis in children during streptomycin therapy. [with summary in French] Probl.tub. 36 no.6:50-55 '58 (MIRA 11:10)

1. Iz kafedry detskikh bolezney Omskogo meditsinskogo instituta imeni M.I. Kalinina (nachnyy rukovoditel' raboty - chlen-korrespondent AMN SSSR prof. O.D. Sokolova-Ponomareva).

(TUBERCULOSIS, MENINGEAL, in inf. & child.
ther., streptomycin, eff. on cardiovasc. system (Rus))
(CARDIOVASCULAR, SYSTEM, in various dis.
meningeal tuberc. in child., eff. of streptomycin (Rus))

"APPROVED FOR RELEASE: Thursday, September 26, 2002 CIA-RDP86-00513R001446510003-7
APPROVED FOR RELEASE: Thursday, September 26, 2002 CIA-RDP86-00513R001446510003-7"

RYSEVA, Ye.S., starshiy nauchnyy sotrudnik

Results of a session on rheumatic fever in children. Pediatriia 36 no.7:91-93 Je '58 (MIRA 11:7)
(RHEUMATIC FEVER)

"APPROVED FOR RELEASE: Thursday, September 26, 2002 CIA-RDP86-00513R001446510003-7
APPROVED FOR RELEASE: Thursday, September 26, 2002 CIA-RDP86-00513R001446510003-7"

RYSKVA, Ye.S.

Use of antihistamines in rheumatic fever and other allergic conditions in children. Pediatriia 37 no.7:60-64 Jl '59. (MIRA 12:10)

1. Iz kliniki starshego detskogo vozrasta Instituta pediatrii AMN SSSR (dir. - chlen-korrespondent AMN SSSR prof.O.D.Sokolova-Ponomareva).

(ANTIHISTAMINICS, ther. use,
allergy & rheum. in child. (Rus))
(ALLERGY, in inf. & child.
antihistaminic ther. (Rus))
(RHEUMATISM, in inf. & child,
same)

"APPROVED FOR RELEASE: Thursday, September 26, 2002 CIA-RDP86-00513R001446510003-7
APPROVED FOR RELEASE: Thursday, September 26, 2002 CIA-RDP86-00513R001446510003-7"

RYSEVA, Ye.S., kand.med.nauk; MIYESEROVA, Ye.K., kand.med.nauk

Effect of various types of treatment of the dynamics of immunological indices in rheumatic fever in children. Vest.AMN SSSR 15 no.3:45-52 '60. (MIRA 14:5)

1. Institut pediatrii AMN SSSR.
(RHEUMATIC FEVER) (HORMONES)

"APPROVED FOR RELEASE: Thursday, September 26, 2002 CIA-RDP86-00513R001446510003-7
APPROVED FOR RELEASE: Thursday, September 26, 2002 CIA-RDP86-00513R001446510003-7"

SOKOLOVA-PONOMAREVA, O.D.; RYSEVA, Ye.S.; EDEL'MAN, Z.I.

Advanced training for rheumatic fever specialists working in pediatric institutions. Vop. okh. mat. i det. 6 no.5:72-76 My '61. (MIRA 14:10)

1. Iz Instituta pediatrii AMN SSSR (direktor - deystvitel'nyy chlen AMN SSSR prof. O.D.Sokolova-Ponomareva) i Nauchno-issledovatel'skogo instituta pediatrii RSFSR (direktor - doktor med.nauk A.P.Chernikova) na baze 1-y Detskoy klinicheskoy bol'nitsy (glavnyy vrach - zasluzhennyy vrach RSFSR Ye.V. Prokhorovich).

(RHEUMATIC FEVER) (PEDIATRICS--STUDY AND TEACHING)

"APPROVED FOR RELEASE: Thursday, September 26, 2002 CIA-RDP86-00513R001446510003-7
APPROVED FOR RELEASE: Thursday, September 26, 2002 CIA-RDP86-00513R001446510003-7

L 24520-66 EWT(1)/T JK

ACC NR: AP6009527 (N) SOURCE CODE: UR/0413/66/000/005/0049/0049

INVENTOR: Bardyshev, I. I.; Rysev, M. A.; Shint, A. A.; Kanykina, T. D.; Parmon, A. I.; Geller, A. A.

ORG: none

TITLE: Method of stabilization of sticky material [announced by the Institute of Physical and Organic Chemistry AN BSSR (Institut fiziko-organicheskoy khimii AN BSSR)] Class 22, No. 179407

SOURCE: Izobreteniya, promyshlennyye obraztsy, tovarnyye znaki, no. 5, 1966, 49

TOPIC TAGS: insect control, stabilization

ABSTRACT: An Author Certificate has been issued for a method of stabilizing sticky material containing colophony for insect control. To increase the stability of the material, the colophony is modified at 170 to 300C with 0.5--2% zinc chloride. [NT]

SUB CODE: 11, 07/ SUBM DATE: 22Jan65/

Card 1/1 BLG UDC: 547.914.2-171:632-952

"APPROVED FOR RELEASE: Thursday, September 26, 2002 CIA-RDP86-00513R001446510003-7
APPROVED FOR RELEASE: Thursday, September 26, 2002 CIA-RDP86-00513R001446510003-7"

RYSEVA, Ye.S., starshiy nauchnyy sotrudnik; VOLKOVA, Z.I., starshyy laborant

Functional state of the adrenal cortex in healthy and rheumatic children. Vop.okh.mat. i det. 8 no.2:11-16 F'63. (MIRA 16:7)

1. Iz otdeleniya detskogo vozrasta (zav. - deystvitel'nyy chlen AMN SSSR prof. O.D. Sokolova-Ponomareva) i biokhimicheskoy laboratorii (zav. - doktor biolog. nauk A.A. Titayev) Instituta pediatrii (dir. - dotsent M. Ya. Studenikin) AMN SSSR.

(ADRENAL CORTEX) (RHEUMATIC FEVER)

"APPROVED FOR RELEASE: Thursday, September 26, 2002 CIA-RDP86-00513R001446510003-7
APPROVED FOR RELEASE: Thursday, September 26, 2002 CIA-RDP86-00513R001446510003-7"

RYSH, P.

Formation of nucleus in the secondary graphitization of magnesium cast iron. Lit. proizv. no.6:37-40 Je '61. (MIRA 14:6)
(Cast iron--Metallography)

APPROVED FOR RELEASE: Thursday, September 26, 2002 CIA-RDP86-00513R001446510003-7
APPROVED FOR RELEASE: Thursday, September 26, 2002 CIA-RDP86-00513R001446510003-7

L 23090-65 EWT(m)/EWA(d)/EWP(t)/EWP(b) JD/WB

ACCESSION NR: AP4048317 Z/0065/64/000/005/0433/0444

AUTHOR: Lobl, K. (Lebl, K.); Tuma, H. (Tuma, G.); Rysava, M. (Ryshava, M.) B

TITLE: Study of the aging of Cr18Ni9Ti corrosion-resistant steel 18

SOURCE: Kovove materialy, no. 5, 1964, 433-444

TOPIC TAGS: carbide precipitation, structural component, structural process, metallographic investigation, electron microscopy, optical microscopy, isothermal annealing, chromium carbide, space diagram, understabilized steel, overstabilized steel

ABSTRACT: This article deals with the precipitation of the two carbides MC and $M_{23}C_6$, which are the most important structural components from the point of view of intercrystalline corrosion and mechanical properties. The kinetics of the precipitation of carbides of this type were investigated in two melts containing titanium above and below the limit prescribed for the so-called stabilization of carbon. The original material was in the form of round steel bars measuring 25 and 30 mm in diameter. The structural processes during annealing, especially the precipitation of the carbides, were investigated metallographically (by optical

Card 1/3

APPROVED FOR RELEASE: Thursday, September 26, 2002 CIA-RDP86-00513R001446510003-7
APPROVED FOR RELEASE: Thursday, September 26, 2002 CIA-RDP86-00513R001446510003-7

L 23090-65

ACCESSION NR: AP4048317

and electron microscopy with the aid of carbon extraction pictures), and by electrolytical separation. The specimens were isothermally annealed at temperatures from 450 to 1000C over periods of from 300 to 1000 hr. The changes of mechanical properties and the number of structural components present were determined. The results may be summarized as follows: 1) at low temperatures and short annealing periods the delta ferrite remains in the structure; raising the temperature and prolonging the annealing temperature brings on the sigma phase; 2) at temperatures of maximum carbide precipitation (750 -- 800C) chromium carbide precipitated in the understabilized steel in the form of bars of parallel oriented particles; in overstabilized steel the chromium carbide disappears at these temperatures because practically all of the carbon is absorbed by the titanium in the formation of Ti(C,N); 3) the space diagrams showing the precipitated quantities of the individual phases (above all of Ti(C, NO and $M_{23}C_6$) as a function of temperature and isothermal annealing time were plotted from the results of the isolation of the individual structural components; 4) of the mechanical properties, impact strength is particularly dependent on temperature and isothermal annealing time. Orig. art. has: 6 figures and 3 tables.

Card 2/3

APPROVED FOR RELEASE: Thursday, September 26, 2002 CIA-RDP86-00513R001446510003-7
APPROVED FOR RELEASE: Thursday, September 26, 2002 CIA-RDP86-00513R001446510003-7

L 23090-65

ACCESSION NR: AP4043317

ASSOCIATION: Statni vyzkumny ustav materialu i technologie, Prague (State Research Institute for Materials and Technology)

SUBMITTED: 25Apr64 ENCL: 00 SUB CODE: MM

NO REF SOV: 000 OTHER: 003

Card 3/3

"APPROVED FOR RELEASE: Thursday, September 26, 2002 CIA-RDP86-00513R001446510003-7
APPROVED FOR RELEASE: Thursday, September 26, 2002 CIA-RDP86-00513R001446510003-7"

RYSHAVY, D. [Rysavy, D.]

Oxidation of hydrocarbons in the presence of inhibitors. Vysokom. soed. 3 no.3:464-469 Mr '61. (MIRA 14:6)

1. Nauchno-issledovatel'skiy institut makromolekulyarnoy khimii, Brno, Chekhoslovakiya.
(Hydrocarbons) (Antioxidants)

"APPROVED FOR RELEASE: Thursday, September 26, 2002 CIA-RDP86-00513R001446510003-7
APPROVED FOR RELEASE: Thursday, September 26, 2002 CIA-RDP86-00513R001446510003-7"

RYSHAVY, D. [Rysavy, D.]; BALABAN, L.

Effect of polymerization catalysts on the degradation rate of isotactic polypropylene. Vysokom.soed. 3 no.3:470-474 Mr '61. (MIRA 14:6)

1. Nauchno-issledovatel'skiy institut makromolekulyarnoy khimii Brno, Chekhoslovakiya.
(Polymerization) (Catalysts) (Propene)

"APPROVED FOR RELEASE: Thursday, September 26, 2002 CIA-RDP86-00513R001446510003-7
APPROVED FOR RELEASE: Thursday, September 26, 2002 CIA-RDP86-00513R001446510003-7"

RYSHAVY, D.; BALABAN, L.; SLAVIK, V.; RUZHA, Ya.

Oxidation of isotactic polypropylene. Vysokom.soed. 3 no.7: 1110-1115 Jl '61. (MIRA 14:6)

1. Nauchno-issledovatel'skiy institut makromolekulyarnoy khimii, Brno.

(Propene) (Oxidation)

"APPROVED FOR RELEASE: Thursday, September 26, 2002 CIA-RDP86-00513R001446510003-7
APPROVED FOR RELEASE: Thursday, September 26, 2002 CIA-RDP86-00513R001446510003-7"

RYSHAVYI, B.; MIKHALSK, Ia.; FIDLER, V.

Possibility of adaptation of Amidostomum anseris (Zeder, 1800, Railliet and Henry, 1909 in birds other than geese. Fol.biol., Praha 1 no.5:276-281 Oct 55.

1. Biologicheskiy institut CHSAN, parazitologiya, Praga i Ptitsezavod, Libush

(PARASITES,
Amidostomum anseris, adaptation in birds other than geese)

"APPROVED FOR RELEASE: Thursday, September 26, 2002 CIA-RDP86-00513R001446510003-7
APPROVED FOR RELEASE: Thursday, September 26, 2002 CIA-RDP86-00513R001446510003-7"

SIVACHEK, N.I.; DEMCHENKO, V.F.; KRYMSKIY, I.I.; RYSHCHENKO, A.V.

Mechanizing the operation of shaft grates. Sbor.rats.predl. vnedr.v proizv. no.5:5-8 '60. (MIRA 14:8)

1. Trest "Dzerzhinskruda", rudoupravleniye "Ingulets".
(Mining machinery--Technological innovations)

"APPROVED FOR RELEASE: Thursday, September 26, 2002 CIA-RDP86-00513R001446510003-7
APPROVED FOR RELEASE: Thursday, September 26, 2002 CIA-RDP86-00513R001446510003-7"

RYSHCHENKO, P.G.; STREMOVSKIY, R.A.

Drying tiles on kiln cars. Stek. i ker. 19 no.6:35 Je '62.
(MIRA 15:7)

1. Khar'kovskiy plitochnyy zavod.
(Tiles) (Drying apparatus)

"APPROVED FOR RELEASE: Thursday, September 26, 2002 CIA-RDP86-00513R001446510003-7
APPROVED FOR RELEASE: Thursday, September 26, 2002 CIA-RDP86-00513R001446510003-7"

LIVSON, Z.A., kand. tekhn. nauk; RYSHCHENKO, M.I., inzh.

Quartz pelite as raw material for the manufacture of faience products. Stek. i ker. 22 no.4:20-23 Ap '65. (MIRA 18:5)

1. Khar'kovskiy politekhnicheskiy institut imeni V.I.Lenina.

"APPROVED FOR RELEASE: Thursday, September 26, 2002 CIA-RDP86-00513R001446510003-7
APPROVED FOR RELEASE: Thursday, September 26, 2002 CIA-RDP86-00513R001446510003-7"

GUDALIN, G. S., RYSHCHUK, N. A., SEMOVA, G. A.

Geography and Geology

Requirements of industry as to the quality of mineral raw materials. Handbook for geologists--Moskva, Gos. izd-vo geologicheskoi lit-ry Komiteta po delam geologii pri SNK SSSR, No. 25, Copper, 1947.

Monthly List of Russian Accessions, Library of Congress, October 1952. Unclassified.

"APPROVED FOR RELEASE: Thursday, September 26, 2002 CIA-RDP86-00513R001446510003-7
APPROVED FOR RELEASE: Thursday, September 26, 2002 CIA-RDP86-00513R001446510003-7"

ANTONYUK, I.D.; ORLOV, V.G.; SAMSONOV, A.V.; ASHIKHMIN, A.K., inzh., retsenzent; ZHIL'TSOV, P.N., inzh., retsenzent; KOZAK, V.A., inzh., retsenzent; POGODIN, A.M., inzh.; POTAPOV, V.P., inzh., retsenzent; RYSHCHUK, N.S., red.; BOBROVA, Ye.N., tekhn.red.

[Handbook for the station master] Spravochnik nachal'nika stantsii. Moskva, Transzheldorizdat, 1963. 571 p.
(MIRA 17:2)

"APPROVED FOR RELEASE: Thursday, September 26, 2002 CIA-RDP86-00513R001446510003-7
APPROVED FOR RELEASE: Thursday, September 26, 2002 CIA-RDP86-00513R001446510003-7"

KOLDOMASOV, Yu.I.; MILYUKIN. F.P., retsenzent; RYSHCHUK, N.S., red.; USENKO, L.A., tekhn.red.

[Comprehensive development of Soviet transportation] Kompleksnoe razvitie transporta SSSR. Moskva, Vses.izdatel'sko-poligr.ob"edinenie M-va putei soobshcheniia, 1961. 179 p. (MIRA 14:6)
(Transportation)

"APPROVED FOR RELEASE: Thursday, September 26, 2002 CIA-RDP86-00513R001446510003-7
APPROVED FOR RELEASE: Thursday, September 26, 2002 CIA-RDP86-00513R001446510003-7"

SHCHERBAKOV, Vasiliy Pavlovich, inzh.; RABINOVICH, Anisim Borisovich, inzh.; RYSHCHUK, N.S., inzh., red.; KHITROV, P.A., tekhn. red.

[Manual for the passenger car conductor] Rukovodstvo provodniku passazhirskikh vagonov. Izd. 4., perer. i dop. Moskva, Vses. izdatel'sko-poligr. ob"edinenie M-va putei soobshcheniia, 1960. 259 p. (MIRA 14:5)
(Railroad conductors) (Railroads--Passenger cars)

"APPROVED FOR RELEASE: Thursday, September 26, 2002 CIA-RDP86-00513R001446510003-7
APPROVED FOR RELEASE: Thursday, September 26, 2002 CIA-RDP86-00513R001446510003-7"

TRET'YAKOV, A.P.; RYSHCHUK, N.S., redaktor; BOBROVA, Ye.N., tekhnicheskiy redaktor

[Scientists and inventors in railroad transportation, collected articles] Uchenye i izobretateli zheleznodorozhnogo transporta; sbornik statei. Moskva, Gos. transp. zhel-dor. izd-vo, 1956. 227 p.
(Engineers) (Inventors) (Railroad research) (MLRA 10:4)

"APPROVED FOR RELEASE: Thursday, September 26, 2002 CIA-RDP86-00513R001446510003-7
APPROVED FOR RELEASE: Thursday, September 26, 2002 CIA-RDP86-00513R001446510003-7"

RYSHCHUK, N.S.; KRISHTAL', L.I., red.; [illegible]SENKO, L.A., tekhn. red.

[Calendar-handbook of the railroadman, 1962-1963]Kalendar'-spravochnik zheleznodorozhnika, 1962-1963. Moskva, Trans-zhelezdorizdat 1962. 350 p. (MIRA 15:9)
(Railroads--Handbooks, manuals, etc.)

"APPROVED FOR RELEASE: Thursday, September 26, 2002 CIA-RDP86-00513R001446510003-7
APPROVED FOR RELEASE: Thursday, September 26, 2002 (CIA-RDP86-00513R001446510003-7"

L 33868-66

ACC NR: AP6021489 SOURCE CODE: UR/0413/66/000/011/0140/0140

INVENTOR: Antonov, O. K.; Anisenko, V. G.; Bolbot, A. V.; Yeroshin, V. F.; Ryshik, Ya. I.; Tolmachev, V. I.

ORG: none

TITLE: Method of compensating for the aerodynamic asymmetry of propeller aircraft. Class 62, No. 182528

SOURCE: Izobreteniya, promyshlennyye obraztsy, tovarnyye znaki, no. 11, 1966, 140

TOPIC TAGS: aerodynamic control, gas turbine engine, aircraft auxiliary engine, asymmetric body

ABSTRACT: An Author Certificate has been issued for a method of compensating for the aerodynamic asymmetry of propeller aircraft. For the purpose of increasing flight safety and simplifying flying technique, aerodynamic asymmetry is decreased by the thrust of an auxiliary gas-turbine engine (1). This creates a moment opposite

Card 1/2 UDC: 629.135/138

"APPROVED FOR RELEASE: Thursday, September 26, 2002 CIA-RDP86-00513R001446510003-7
APPROVED FOR RELEASE: Thursday, September 26, 2002 CIA-RDP86-00513R001446510003-7"

ACC NR: AP6021489

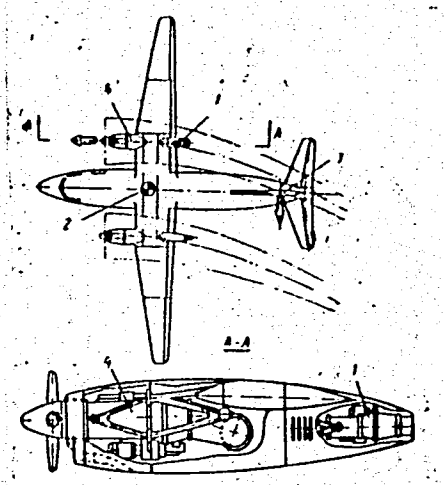

Fig. 1. Compensating for aerodynamic asymmetry

1 - Auxiliary gas-turbine engine; 2 - center of gravity; 3 - vertical tail surfaces; 4 - main power plant

to the moment indicated (see Fig. 1), which is caused by an asymmetric blast on the vertical tail (3) surfaces by the airflow from the main power plant (4). Orig. art. has: 1 figure. [WS]

SUB CODE: 01, 21/ SUBM DATE: 13Oct65/ ATD PRESS: 5042

Card 2/2

"APPROVED FOR RELEASE: Thursday, September 26, 2002 CIA-RDP86-00513R001446510003-7
APPROVED FOR RELEASE: Thursday, September 26, 2002 CIA-RDP86-00513R001446510003-7"

N/5
644.67
.R9

RYSHIKH, A N

Panaritsiy I Ego Lecheniye Na Osnove Metodov A. V. Vishnevskogo. Izd. 2, Perer. i Dop. (Panaritium and Its Therapy on the Basis of A. V. Vishnevskii's Methods) Moskva, Medgiz, 1953.

161 p. Illus.

"APPROVED FOR RELEASE: Thursday, September 26, 2002 CIA-RDP86-00513R001446510003-7
APPROVED FOR RELEASE: Thursday, September 26, 2002 CIA-RDP86-00513R001446510003-7"

RYSHIKOV, K. M.; SUDARIKOV, V. Ye.

Baikal, Lake - Parasites

Work of the 272nd Union Helminthological Expedition of 1949 in the Lake Baikal region. K. M. Ryshikov, V. Ye. Sudarikov. Trudy Gel'm. Lab. No. 5, 1951

Monthly List of Russian Accessions, Library of Congress , September 1952 Unclassified

"APPROVED FOR RELEASE: Thursday, September 26, 2002 CIA-RDP86-00513R001446510003-7
APPROVED FOR RELEASE: Thursday, September 26, 2002 CIA-RDP86-00513R001446510003-7"

POD'YAPOL'SKAYA, V. P.; SPASSKIY, A. A.; RYSHIKOV, K. M.

Pechora Valley - Parasites

Work of the 265th Union Helminthological Expedition of 1947 in the region of the Pechora River of Komi A. S. S. R. Trudy Gel'm. lab. no. 5, 1951.

Monthly List of Russian Accessions, Library of Congress, September 1952. UNCLASSIFIED.

"APPROVED FOR RELEASE: Thursday, September 26, 2002 CIA-RDP86-00513R001446510003-7
APPROVED FOR RELEASE: Thursday, September 26, 2002 CIA-RDP86-00513R001446510003-7"

RYSHKA, F.

USSR/Organic Chemistry - Synthetic Organic Chemistry, E-2

Abst Journal: Referat Zhur - Khimiya, No 19, 1956, 61499

Author: Ryshka, F.

Institution: None

Title: Synthesis of N-3-chlorophenylphthalamic Acid

Original Periodical: Sb. stud. nauch.-issled. rabot, Mosk. s.-kh. akad. im. K. A. Timiryazeva, 1956, No 6, 88-92

Abstract: There was synthesized 3-$ClC_6H_4NHCOC_6H_4COOH$-2 (I) to study its properties as plant growth regulator. Chlorination of dry $C_6H_5NO_2$ in presence of freshly prepared $FeCl_3$ gives m-chloronitrobenzene (II) with yield of 50%, MP 44.4° (from alcohol or CH_3COOH). II is reduced with Zn + HCl to m-chloronitro-aniline (III), yield 90%, BP 228-230°. On interaction of III and phthalic anhydride in acetone or $CHCl_3$ I is formed with yield of 98%, MP 166°. It is shown that I at low concentration enhances growth of roots in wheat.

Card 1/1

"APPROVED FOR RELEASE: Thursday, September 26, 2002 CIA-RDP86-00513R001446510003-7
APPROVED FOR RELEASE: Thursday, September 26, 2002 CIA-RDP86-00513R001446510003-7"

RYSHKA, F.Yu.; KHOKHLOV, A.S.

Gel filtration of pituitary hormones. Izv. AN SSSR. Ser. biol. 31 no.1:129-134 Ja-F '66. (MIRA 19:1)

1. Institut khimii prirodnykh soyedineniy AN SSSR, Moskva.
Submitted October 4, 1965.

"APPROVED FOR RELEASE: Thursday, September 26, 2002 CIA-RDP86-00513R001446510003-7
APPROVED FOR RELEASE: Thursday, September 26, 2002 CIA-RDP86-00513R001446510003-7"

L 37742-66

ACC NR: AP6028236 SOURCE CODE: UR/0216/66/000/001/0129/0134

AUTHOR: Ryshka, F. Yu.; Khokhlov, A. S. 31 B

ORG: Institute of Chemistry of Naturally Occurring Compounds, AN SSSR, Moscow (Institut khimii prirodnykh soyedineniy AN SSSR)

TITLE: Gel filtration of hormones of the hypophysis 22

SOURCE: AN SSSR. Izvestiya. Seriya biologicheskaya, no. 1, 1966, 129-134

TOPIC TAGS: hormone, gel, rabbit, filtration, ACTH, vasopressin, biochemistry

ABSTRACT: Separation and isolation of hormones of the hypophysis by the method of gel filtration, which is described in the literature, was studied. Gel filtration was carried out in columns containing G-25, G-50, and G-100 sephadex gels. Solutions in 0.1-0.2 N acetic acid were filtered and the same solvent was used in elution. The Rf values and elution volumes for oxytocin, vasopressin, alpha-melanostimulating hormone, beta-melanostimulating hormone, ACTH, prolactin, thyreostimulating hormone, follicle-stimulating hormone, the hormone stimulating interstitial cells, somatotropic vasopressin, and lipotropin on the three types of sephadex were determined. The lipolytic activity of hormones was tested in vitro and in biological tests on rabbits. It was confirmed that in addition to the previously known hypophyseol hormones lipotropin, a hormone that had been isolated by the authors (cf. Biokhimiya, vol. 30, p. 1,277) was also present. The polypeptide lipotropin, which had a molecular

Card 1/2 UDC: 577.17

"APPROVED FOR RELEASE: Thursday, September 26, 2002 CIA-RDP86-00513R001446510003-7
APPROVED FOR RELEASE: Thursday, September 26, 2002 CIA-RDP86-00513R001446510003-7"

ACC NR: AP6028236

weight distinctly different from those of ACTH, melanostimulating hormone, and vasopressin, also exhibited the strong lipolytic action on the fat tissue guinea pigs in vitro that is characteristic of these three hormones. Orig. art. has: 6 figures and 1 table. [JPRS: 36,932]

SUB CODE: 06 / SUBM DATE: 04Oct65 / ORIG REF: 002 / OTH REF: 017

"APPROVED FOR RELEASE: Thursday, September 26, 2002 CIA-RDP86-00513R001446510003-7
APPROVED FOR RELEASE: Thursday, September 26, 2002 CIA-RDP86-00513R001446510003-7"

VETLUGINA, L.A.; MOROZOVA, G.R.; BALITSKAYA, A.K.; RYSHKA, F.Yu.; KHOKHLOV, A.S.

Separation of the antibiotic coelicomycin by gel filtration on sephadex. Antibiotiki 9 no.9:778-783 S '64. (MIRA 19:1)

1. Institut mikrobiologii i virusologii AN Kazakhskoy SSR i Institut khimii prirodnykh soyedineniy AN SSSR, Moskva.

"APPROVED FOR RELEASE: Thursday, September 26, 2002 CIA-RDP86-00513R001446510003-7
APPROVED FOR RELEASE: Thursday, September 26, 2002 CIA-RDP86-00513R001446510003-7"

RYSHKA, F.Yu.; KHOKHLOV, A.S.

Purification and study of lipotropic substance from the hypophyses of various animal species. Biokhimiia 30 no.6: 1277-1284 N-D '65. (MIRA 19:1)

1. Institut khimii prirodnykh soyedineniy AN SSSR, Moskva.
Submitted June 18, 1965.

RYSHKE
APPROVED FOR RELEASE: Thursday, September 26, 2002 CIA-RDP86-00513R001446510003-7
APPROVED FOR RELEASE: Thursday, September 26, 2002 CIA-RDP86-00513R001446510003-7"

RUMANIA / Chemical Technology. Control Devices & Automatic Regulation. H

Abs Jour: Ref Zhur-Khimiya, No 12, 1958, 39935.

Author : Kantuniari, Ryshke, Badya.
Inst : Not given.
Title : The Problems of Automatization of Continuous Motion; in Distillation Setups.

Orig Pub: Rev. Chim., 1957, No 8, 528-534.

Abstract: Various constructions for automatization of distillation assemblies is described; a catalog of applied equipment is given.

Card 1/1

"APPROVED FOR RELEASE: Thursday, September 26, 2002 CIA-RDP86-00513R001446510003-7
APPROVED FOR RELEASE: Thursday, September 26, 2002 CIA-RDP86-00513R001446510003-7"

RYSHKEVICH, V.

The workers' committee in the struggle for the consolidation of the state farm economy. Sov. profsoiuzy 17 no.6:26-28 Mr '61. (MIRA 14:3)

1. Predsedatel' rabochkoma sovkhoza "Volkovyskiy," Grodnenskoy oblasti, BSSR.

(Grodno Province—Trade unions)
(State farms)

"APPROVED FOR RELEASE: Thursday, September 26, 2002 CIA-RDP86-00513R001446510003-7
APPROVED FOR RELEASE: Thursday, September 26, 2002 CIA-RDP86-00513R001446510003-7"

NAUMOV, A.N.; RYSKIN, G.Ya.

Isotopic effect of diffusion of lithium in sodium. Fiz. tver. tela 7 no.3:695-696 Mr '65. (MIRA 18:4)

1. Fiziko-tekhnicheskiy institut imeni Ioffe AN SSSR, Leningrad.

"APPROVED FOR RELEASE: Thursday, September 26, 2002 CIA-RDP86-00513R001446510003-7
APPROVED FOR RELEASE: Thursday, September 26, 2002 CIA-RDP86-00513R001446510003-7"

GUSAROV, N.; RYSHKIN, I.

Indifferent to urgent tasks. Sov.profsoiuzy 4 no.6:43-44 Je '56.
(MLRA 9:8)

(Al'met'yevsk--Community centers)

"APPROVED FOR RELEASE: Thursday, September 26, 2002 CIA-RDP86-00513R001446510003-7
APPROVED FOR RELEASE: Thursday, September 26, 2002 CIA-RDP86-00513R001446510003-7"

RYSHKIN, V.S.

Heart massage as a method of controlling air embolism in the coronary vessels. Khirurgiia no.9:58-62 '62. (MIRA 15:10)

1. Iz kafedry gospital'noy khirurgii (zav. - deystvitel'nyy chlen AMN SSSR prof. B.V.Petrovskiy) Moskovskogo ordena Lenina meditsinskogo instituta imeni I.M.Sechenova.
(HEART--SURGERY) (EMBOLISM)

"APPROVED FOR RELEASE: Thursday, September 26, 2002 CIA-RDP86-00513R001446510003-7
APPROVED FOR RELEASE: Thursday, September 26, 2002 CIA-RDP86-00513R001446510003-7"

RYSHKIN, V. S.; KHODAS, M. Ya.

Change in the tension of oxygen in the cerebral cortex and myocardium of the left ventricle during heart massage. Eksper. khir. no.3:11-15 '62. (MIRA 15:7)

1. Iz gospital'noy khirurgicheskoy kliniki (dir. - deystvitel'nyy chlen AMN SSSR prof. B. V. Petrovskiy) I Moskovskogo meditsinskogo instituta.

(CARDIAC RESUSCITATION) (OXYGEN IN THE BODY)
(CEREBRAL CORTEX) (HEART—MUSCLE)

"APPROVED FOR RELEASE: Thursday, September 26, 2002 CIA-RDP86-00513R001446510003-7
APPROVED FOR RELEASE: Thursday, September 26, 2002 CIA-RDP86-00513R001446510003-7"

PETROVSKIY, B.V., laureat Leninskoy premii, prof.; RYSHKIN, V.S.

Heart massage. Sov.med. 25 no.6:3-7 Je '61. (MIRA 15:1)

1. Iz kafedry gospital'noy khirurgii (zav. - deystvitel'nyy chlen AMN SSSR prof. B.V.Petrovskiy) I Moskovskogo ordena Lenina meditsinskogo instituta imeni I.M.Sechenova.
(RESUSCITATION)

"APPROVED FOR RELEASE: Thursday, September 26, 2002 CIA-RDP86-00513R001446510003-7
APPROVED FOR RELEASE: Thursday, September 26, 2002 CIA-RDP86-00513R001446510003-7"

PETROVSKIY, B.V.; SOLOV'YEV, G.M.; SHUMAKOV, V.I.; BUNYATYAN, A.A.; KHODAS, M.Ya.; SHABALKIN, B.V.; RYSHKIN, V.S.; PYATNITSKAYA, G.Kh.

Results of work with the apparatus of artificial blood circulation of the Craford-Senning system. Trudy 1-go MMI 33:9-14 '64.
(MIRA 18:3)

"APPROVED FOR RELEASE: Thursday, September 26, 2002 CIA-RDP86-00513R001446510003-7
APPROVED FOR RELEASE: Thursday, September 26, 2002 CIA-RDP86-00513R001446510003-7"

RYSHKINA, T.A., assistant.; RADUSHEV, V.I., assistant.

Composition of precipitates settling in the distiller during soda ash production. Nauch. trudy NPI 26:276-281 '55. (MLRA 9:12)
(Soda industry)

"APPROVED FOR RELEASE: Thursday, September 26, 2002 CIA-RDP86-00513R001446510003-7
APPROVED FOR RELEASE: Thursday, September 26, 2002 CIA-RDP86-00513R001446510003-7"

KOVALENKO, Ye.V.; LYUTSEDARSKIY, V.A.; RYSHKINA, T.A.

Investigating semiconductor thermal resistors based on Cu_xO-Mn_3O_4. Zhur.prikl.khim. 34 no.8:1880-1883 Ag '61. (MIRA 14:8)

(Thermistors)
(Copper oxide)
(Manganese oxide)

"APPROVED FOR RELEASE: Thursday, September 26, 2002 CIA-RDP86-00513R001446510003-7
APPROVED FOR RELEASE: Thursday, September 26, 2002 CIA-RDP86-00513R001446510003-7"

15 2670
24.7600

25232
S/080/61/034/008/016/018
D204/D305

AUTHORS: Kovalenko, E.V., Lyutsedarskiy, V.A. and Ryshkina, T.A.

TITLE: Investigating semiconductor thermoresistances with a Cu_2O - Mn_3O_4 base

PERIODICAL: Zhurnal prikladnoy khimii, v. 34, no. 8, 1961, 1880-1883

TEXT. The purpose of this investigation was to establish the phase composition of the roasted cupro-manganese mixture used in thermoresistances. The authors prepared Mn_3O_4 by prolonged heating of Mn_2O_3 at 950 - 1000°, the correspondence of the obtained compound to the formula and the absence of other oxide phases being verified by a method of X-ray analysis: RKD cell, URS-55 equipment with an iron anticathode and a 6 hour exposure at 27 kV and 15 mA, type "PT" film, specimen diameter 0.7 mm. The interplane distances d are calculated by correcting for the diameter of the specimen, and the intensity I is estimated by eye according to the 5-mark scale. Com-

Card 1/4

"APPROVED FOR RELEASE: Thursday, September 26, 2002 CIA-RDP86-00513R001446510003-7
APPROVED FOR RELEASE: Thursday, September 26, 2002 CIA-RDP86-00513R001446510003-7"

S/080/61/034/008/016/018
D204/D505

Investigating semiconductor

parison of the interplane distances and line intensities of the studied sample with the standard values given by V. Nikheyev (Ref. 5 Rentgenometricheskiy opredelitel' mineralov (X-ray Detector of Minerals, Gosgeoltekhizdat, Moscow, 1957) and A. Kitaygorodskiy (Ref. 6 Rentgenostrukturnyy analiz melkokristallicheskikh i amorfnykh tel (Roentgeno-structural Analysis of Finely Crystalline and Amorphous Bodies, Gostekhizdat, Moscow and Leningrad, 1952) and others indicates that the prepared compound completely corresponds to Mn_3O_4. The value of the magnetic susceptibility of the studied specimen also closely agrees with that cited in published handbooks. As regards cuprous oxide, B. Gulida (Ref. 9: Tr. Tomskogo Gos. Univ. im. Kuybysheva, 145, 148, 1957) notes the instability of the CuO - Cu_2O equilibrium on heating. According to Ormont, cuprous ions occur in tetrahedral positions, the coordination of the cupric ions being almost tetragonal. In order to ascertain the changes in the phase composition of a cupro-manganese mixture with variation in temperature, X-ray analyses were made of specimens with the composition 66% Cu_2O - 34% Mn_3O_4 that were heated to a constant weight at temperatures of 400, 500, 600, 700, 800 and 900°. The experimental

"APPROVED FOR RELEASE: Thursday, September 26, 2002 CIA-RDP86-00513R001446510003-7
APPROVED FOR RELEASE: Thursday, September 26, 2002 CIA-RDP86-00513R001446510003-7"

Investigating semiconductor...

results suggest the existence of two phases: $CuMn_2O_4$ and CuO. The relative content of these phases varies with temperature; CuO shows a minimum at 500° and then smoothly increases to reach a maximum at 900°. The appearance of CuO may be connected with the oxidation of Cu_2O. The increase in the weight of samples on heating, which proceeds at the expense of the Cu_2O oxidation reaction, would seem to confirm this phenomenon. This increase in the relative concentration of CuO may be due to the greater rate of diffusion of oxygen ions into Cu_2O in comparison with that of copper ions into Mn_3O_4. The most probable form for the reaction taking place during sintering is: $12\ Cu_2O + 4\ Mn_3O_4 + 7\ O_2 = 6\ CuMn_2O_4 + 18\ CuO$. Thus, CuO and a solid solution of Mn_3O_4 in $CuMn_2O_4$ will be present as a result of interaction in the specimens brought to constant weight. The authors assert that this last conclusion agrees with the observations of Rode regarding the formation by manganese of a number of oxygen compounds with a variable composition, a phenomenon also noted by B. Kolomiyets (Ref. 11: Zhurnal tekhnicheskoy fiziki, 27, 1, 51, 1957) and Ye. V. Kurlina et al (Ref. 12: Dokl. Akad. Nauk

"APPROVED FOR RELEASE: Thursday, September 26, 2002 CIA-RDP86-00513R001446510003-7
APPROVED FOR RELEASE: Thursday, September 26, 2002 CIA-RDP86-00513R001446510003-7"

S/080/61/034/008/016/018
D204/D305

Investigating semiconductor...

SSSR, 86, 2, 305, 1952) when studying reciprocal solid solutions between spinels in the system CuO - Mn_3O_4 - O_2. There are 3 figures, 1 table and 12 references: 8 Soviet-bloc and 4 non-Soviet-bloc. The references to the English-language publications read as follows: K. Sinha and A. Sinha, J. Phys. Chem., 61, 6, 758, 1957; Cumulative Alphabetical and grouped numerical index of X-ray diffraction data. American society for testing materials. 1916 Race Street, Philadelphia 3 Pa (1953); Handbook of Chemistry and Physics, 37th edition, 2, Cleveland, 1955-1956; K. Sinha et al. J. Phys. Chem., 62, 2, 1958.

SUBMITTED: May 6, 1960

"APPROVED FOR RELEASE: Thursday, September 26, 2002 CIA-RDP86-00513R001446510003-7
APPROVED FOR RELEASE: Thursday, September 26, 2002 CIA-RDP86-00513R001446510003-7"

Age changes in the permeability of the lens capsule. Vop. klin. i eksp. oft. no.2:67-79 '59. (MIRA 14:11)

(CRYSTALLINE LENS)

"APPROVED FOR RELEASE: Thursday, September 26, 2002 CIA-RDP86-00513R001446510003-7
APPROVED FOR RELEASE: Thursday, September 26, 2002 CIA-RDP86-00513R001446510003-7"

RYSHKOV, I., komandir podrazdeleniya, Geroy Sovetskogo Soyuza

A difficult test. Grazhd.av. 20 no.7:15 Jl '63. (MIRA 16:9)
(Airplanes--Landing)

RYSHKOV, "APPROVED FOR RELEASE: Thursday, September 26, 2002 CIA-RDP86-00513R001446510003-7
APPROVED FOR RELEASE: Thursday, September 26, 2002 CIA-RDP86-00513R001446510003-7"

I.G. RYSHKOV author of "Combination dusting of the seed of winter grain with granosan and benzene hexachloride - a reserve to increase productivity", pub in Zemledelie, Vol 3, No. 7, July 1955.
(Full translation of article, Trans No. A-738, is on Microfilm No. 9006532)

Author discusses work done by Stavropol State Selection Station in 1950-1954 in dusting seed with a combination of granosan and benzene hexachloride in order to protect crops against pests and diseases. Author states that experiments have demonstrated that this dusting disinfects the seed of winter wheat and barley against stinking smut, covered smut, Fusarium and other fungus diseases. Dusted seed are not attacked by false wireworms or wireworms. Author goes on to describe process of dusting, and gives statistical information on increase of production.

"APPROVED FOR RELEASE: Thursday, September 26, 2002 CIA-RDP86-00513R001446510003-7
APPROVED FOR RELEASE: Thursday, September 26, 2002 CIA-RDP86-00513R001446510003-7"

FILIPPOV, S.N. [deceased]; BEDA, N.I.; KRASOVSKIY, L.V.; RYSHKOV, P.Ya.; MASHKOVA, A.K.

Rails made of basic converter steel (with upper oxygen blast). Biul. TSNIIGHM no.22:51-52 '57. (MIRA 11:5)
(Railroads--Rails)

"APPROVED FOR RELEASE: Thursday, September 26, 2002 CIA-RDP86-00513R001446510003-7
APPROVED FOR RELEASE: Thursday, September 26, 2002 CIA-RDP86-00513R001446510003-7"

RYSHKOV, S.S.

One mapping of a Hilbert space upon itself. Dokl. AN SSSR 141 no.5:1042-1044 D '61. (MIRA 14:12)

1. Matematicheskiy institut im. V.A. Steklova AN SSSR. Predstavleno akademikom P.S. Aleksandrovym.
(Hilbert space) (Conformal mapping)

"APPROVED FOR RELEASE: Thursday, September 26, 2002 CIA-RDP86-00513R001446510003-7
APPROVED FOR RELEASE: Thursday, September 26, 2002 CIA-RDP86-00513R001446510003-7"

GOLDOVSKIY, Ye.M.; RYSHKOV, S.S.

Effect of the shape and position of the motion-picture screen on the uniformity of its illumination. Zhur.nauch.i prikl.fot.i kin. 7 no.1:48-56 Ja-F '62. (MIRA 15:3)

1. Vsesoyuznyy gosudarstvennyy institut konematografii (VGIK).
(Motion-picture screens)

"APPROVED FOR RELEASE: Thursday, September 26, 2002 CIA-RDP86-00513R001446510003-7
APPROVED FOR RELEASE: Thursday, September 26, 2002 CIA-RDP86-00513R001446510003-7"

RYSHKOV, S.S.

Structure of an n-dimensional parallelohedron of the first type.
Dokl. AN SSSR 146 no.5:1027-1030 O '62. (MIRA 15:10)

1. Matematicheskiy institut im. V.A.Steklova AN SSSR.
Predstavleno akadmikom I.M.Vinogradovym.
(Polyhedra)

"APPROVED FOR RELEASE: Thursday, September 26, 2002 CIA-RDP86-00513R001446510003-7
APPROVED FOR RELEASE: Thursday, September 26, 2002 CIA-RDP86-00513R001446510003-7"

DELONE, B.N.; RYSHKOV, S.S.

Solution of the problem of the loosest latticed covering for a four-dimensional space by identical spheres. Dokl. AN SSSR 152 no.3:523-524 S '63. (MIRA 16:12)

1. Matematicheskiy institut im. V.A.Steklova AN SSSR. 2. Chlen-korrespondent AN SSSR (for Delone).

"APPROVED FOR RELEASE: Thursday, September 26, 2002 CIA-RDP86-00513R001446510003-7
APPROVED FOR RELEASE: Thursday, September 26, 2002 CIA-RDP86-00513R001446510003-7"

DELONE, B.N.; SANDAKOVA, N.N.; RYSHKOV, S.S.

Optimal cubature lattice for functions of two variables that are smooth on all sides. Dokl. AN SSSR 162 no.6:1230-1233 Je '65. (MIRA 18:7)

1. Chlen-korrespondent AN SSSR (for Delone).

"APPROVED FOR RELEASE: Thursday, September 26, 2002 CIA-RDP86-00513R001446510003-7
APPROVED FOR RELEASE: Thursday, September 26, 2002 CIA-RDP86-00513R001446510003-7"

RYSHKOV, S.S.

Some remarks on various types of n-dimensional parallelohedra and the density of lattice coverings of E^n space by equal spheres. Dokl. AN SSSR 162 no.2:277-280 My '65. (MIRA 18:5)

1. Matematicheskiy institut im. V.A.Steklova AN SSSR. Submitted November 30, 1964.

"APPROVED FOR RELEASE: Thursday, September 26, 2002 CIA-RDP86-00513R001446510003-7
APPROVED FOR RELEASE: Thursday, September 26, 2002 CIA-RDP86-00513R001446510003-7"

RYSHKOV, S.S. Cand Phys-Math Sci -- (diss) "The combiner topology of gilbert ~~areas~~ spaces." Mos, 1957. 7 pp (Mos State Univ im M. V. Lomonosov. Mechanical-Math Faculty), 100 copies (KL, 44-57, 99)

"APPROVED FOR RELEASE: Thursday, September 26, 2002 CIA-RDP86-00513R001446510003-7
APPROVED FOR RELEASE: Thursday, September 26, 2002 CIA-RDP86-00513R001446510003-7"

GOLDOVSKIY, Ye.M.; RYSHKOV, S.S.

Motion-picture image distortion by lenses under vertical and horizontal angles of projection. Zhur.nauch.i prikl.fot. i kin. 5 no.6:439-445 N-D '60. (MIRA 14:1)

1. Vsesoyuznyy nauchno-issledovatel'skiy kinofotoinsitut.
(Motion-picture projection)

"APPROVED FOR RELEASE: Thursday, September 26, 2002 CIA-RDP86-00513R001446510003-7
APPROVED FOR RELEASE: Thursday, September 26, 2002 CIA-RDP86-00513R001446510003-7"

Ryshkov, S.S.

16(1) PHASE I BOOK EXPLOITATION SOV/2660

Vsesoyuznyy matematicheskiy s"yezd. 3rd, Moscow, 1956

Trudy, t. 4: Krat'koye soderzhaniye sektsionnykh dokladov. Doklady inostrannykh uchenykh (Transactions of the 3rd All-Union Mathematical Conference in Moscow, vol. 4, Summary of Sectional Reports. Reports of Foreign Scientists) Moscow, Izd-vo AN SSSR, 1959. 247 p. 2,200 copies printed.

Sponsoring Agency: Akademiya nauk SSSR. Matematicheskiy institut.

Tech. Ed.: G.M. Shevchenko; Editorial Board: A.A. Abramov, V.G. Boltyanskiy, A.M. Vasil'yev, B.V. Medvedev, A.D. Myshkis, S.M. Nikol'skiy (Resp. Ed.), A.G. Postnikov, Yu. V. Prokhorov, K.A. Rybnikov, P. L. Ul'yanov, V.A. Uspenskiy, N.G. Chetayev, G. Ye. Shilov, and A.I. Shirshov.

PURPOSE: This book is intended for mathematicians and physicists.

COVERAGE: The book is Volume IV of the Transactions of the Third All-Union Mathematical Conference, held in June and July 1956. The book is divided into two main parts. The first part contains summaries of the papers presented by Soviet scientists at the Conference that were not included in the first two volumes. The second part contains the text of reports submitted to the editor by non-Soviet scientists. In those cases when the non-Soviet scientist did not submit a copy of his paper to the editor, the title of the paper is cited and, if the paper was printed in a previous volume, reference is made to the appropriate volume. The papers, both Soviet and non-Soviet, cover various topics in number theory, algebra, differential and integral equations, function theory, functional analysis, probability theory, topology, mathematical problems of mechanics and physics, computational mathematics, mathematical logic and the foundations of mathematics, and the history of mathematics.

Ryshkov, S.S. (Moscow). The invariance of infinite dimensional theory groups 73

Section on Geometry

Bumsla, G.I. (L'vov). On certain problems of geometrography connected with accuracy of graphic computations 75

Gordevskiy, D.Z. (Khar'kov). Incidence axioms of multidimensional projective geometry 75

Dorfman, A.G. (Stalingrad). Certain problems of local deformability of surfaces 76

Karapetyan, S.Ye. (Yerevan). Linear complexes of developing surfaces of a congruence 76

Lopshits, A.M. (Moscow). Fundamentals theorem of the theory of a hypersurface in dimensionless Euclidean space 77

Card 15/ 34

"APPROVED FOR RELEASE: Thursday, September 26, 2002 CIA-RDP86-00513R001446510003-7
APPROVED FOR RELEASE: Thursday, September 26, 2002 CIA-RDP86-00513R001446510003-7"

16(1)

AUTHOR: Ryshkov,S.S.

SOV/20-127-2-10/70

TITLE: On k-Regular Imbeddings

PERIODICAL: Doklady Akademii nauk SSSR,1959,Vol 127,Nr 2,pp 272-273 (USSR)

ABSTRACT: The subset A of the Euclidean E^N is called k-regular if no k+2 points of A lie in a k-dimensional plane. The homeomorphic mapping $f: F \to E^N$ of the compactum F into the space E^N is called a k-regular imbedding if the set $f(F)$ is a k-regular subset of E^N. A point x belonging to an n-dimensional compactum is called a point of dimensional full-valuedness if to every neighborhood Ox of x there exists an n-dimensional dimensionally full-valued (compare V.G.Boltyanskiy [Ref 4]) compactum Φ which is contained in Ox.

Theorem: Let the compactum F have the dimension n and have $\left[\frac{k+1}{2}\right]$ points of dimensional full-valuedness. If F is k-regularly imbedded into E^N, then

$$N \geqslant \left[\frac{k+1}{2}\right] n + \left[\frac{k}{2}\right].$$

Card 1/2

"APPROVED FOR RELEASE: Thursday, September 26, 2002 CIA-RDP86-00513R001446510003-7
APPROVED FOR RELEASE: Thursday, September 26, 2002 CIA-RDP86-00513R001446510003-7"

On k-Regular Imbeddings

SOV/20-127-2-10/70

By the estimation the hypothesis N = 2n + k of K.Borsuk [Ref 1,2] is refuted.
There are 4 references, 3 of which are Soviet, and 1 Polish.

ASSOCIATION: Moskovskiy tekstil'nyy institut (Moscow Textile Institute)

PRESENTED: April 2, 1959, by P.S.Aleksandrov, Academician

SUBMITTED: April 2, 1959

Card 2/2

APPROVED FOR RELEASE: Thursday, September 26, 2002 CIA-RDP86-00513R001446510003-7
APPROVED FOR RELEASE: Thursday, September 26, 2002 CIA-RDP86-00513R001446510003-7

L 26777-66 EWT(d) IJP(c)

ACC NR: AP6017469 SOURCE CODE: UR/0020/65/162/006/1230/1233

18
B

AUTHOR: Delone, B.N. (Corresponding member AN SSSR); Sandakova, N. N.; Ryshkov, S. S.

ORG: none

TITLE: Optimal cubature lattice for completely smooth functions of two variables

SOURCE: AN SSSR. Doklady, v. 162, no. 6, 1965, 1230-1233

TOPIC TAGS: differential calculus, mathematic transformation, hodograph

ABSTRACT: The following theorem is proved: The lattice Γ_1^2, constructed on a right triangle, is a two-dimensional optimum lattice for any $m \geq 2$. Methods of differential calculus as well as two previously developed lemmas, are used for the proof: 1) The sum $\Sigma 1/r^{2m}$, for $m \geq 2$, for any vertex of a right triangle centered on point 0 is minimum with respect to all triangles obtained from it by equi-affine transformation, differing little from the initial triangle and leaving point 0 in place. 2) Let there be an n-dimensional lattice Γ having minimum distances a between its points. If, for its equi-affine lattice Γ', the minimum a' is sufficiently small ($a' \lambda a$, where λ is less than some $\lambda_0 < 1$) then $S_{m,\Gamma'} S_{m,\Gamma}$. The constant λ_0 is

2

Card 1/2

"APPROVED FOR RELEASE: Thursday, September 26, 2002 CIA-RDP86-00513R001446510003-7
APPROVED FOR RELEASE: Thursday, September 26, 2002 CIA-RDP86-00513R001446510003-7"

L 26777-66

ACC NR: AP6017469

analyzed in detail. Finally, a hodograph is shown for hyperbolic rotations for which the component introduced by the equi-affine representation of a right triangle centered at point O and a unit leg is equal to the component introduced by the triangle itself. Orig. art. has: 2 figures, 1 formula. [JPRS]

SUB CODE: 12 / SUBM DATE: 19Mar65

Card 2/2

"APPROVED FOR RELEASE: Thursday, September 26, 2002 CIA-RDP86-00513R001446510003-7
APPROVED FOR RELEASE: Thursday, September 26, 2002 CIA-RDP86-00513R001446510003-7"

RYSHKOV, S.S.

On V. A. Borovikov's article "One topological problem connected with certain issues of quantum electrodynamics." Usp.mat.nauk 15 no.3:240 My-Je '60. (MIRA 13:10)

(Topology) (Quantum electrodynamics)

(Borovikov, V.A.)

"APPROVED FOR RELEASE: Thursday, September 26, 2002 CIA-RDP86-00513R001446510003-7
APPROVED FOR RELEASE: Thursday, September 26, 2002 CIA-RDP86-00513R001446510003-7"

RYSHKOV, S.S.

On a class of continuous mappings of some ∞-dimensional sets. Dokl. AN SSSR 114 no.5:961-963 Je '57. (MLRA 10:9)

1. Moskovskiy gosudarstvennyy universitet im. M.V. Lomonosova. Predstavleno akademikom P.S. Aleksandrovym.
(Aggregates) (Spaces, Generalized)

APPROVED FOR RELEASE: Thursday, September 26, 2002 CIA-RDP86-00513R001446510003-7
APPROVED FOR RELEASE: Thursday, September 26, 2002 CIA-RDP86-00513R001446510003-7"

RYSHKOV, S.S.

USSR/Mathematics

Card : 1/1

Authors : Ryshkov, S. S.

Title : Performance of a tube generator

Periodical : Dokl. AN SSSR, 96, Ed. 5, 921 - 924

Abstract : Equations used in determining the performance of tube generators are presented. The working conditions of a tube generator with assumed tube characteristics are analyzed. The analysis is strictly theoretical and, as a proof of the results, 3 example-circuits are given. Three references.

Institution : The M. V. Lomonosov State University, Moscow

Presented by : Academician, P. S. Aleksandrov, March 12, 1954

"APPROVED FOR RELEASE: Thursday, September 26, 2002 CIA-RDP86-00513R001446510003-7
APPROVED FOR RELEASE: Thursday, September 26, 2002 CIA-RDP86-00513R001446510003-7"

BOLTYANSKIY, V.G.; RYSHKOV, S.S.; [illegible], Yu.A.

K-regular imbeddings and their application to the theory of approximation of functions. Dep. mat. rank 15 no. 6:125-132 N-D '60. (MIRA 14:2)

(Topology)

APPROVED FOR RELEASE: Thursday, September 26, 2002 CIA-RDP86-00513R001446510003-7
APPROVED FOR RELEASE: Thursday, September 26, 2002 CIA-RDP86-00513R001446510003-7

✓ Ob Odnom Klasse Nepreryvnykh Otobrazhenii Nekoterykh Beskonechnomernykh Mnozhestv, S. S. Ryzhkov, *AN SSSR Dokl.*, June 11, 1957, pp. [illegible]. In Russian. Study of a class of continuous mappings of some n-dimensional sets.

3

16 26

Smw

APPROVED FOR RELEASE: Thursday, September 26, 2002 CIA-RDP86-00513R001446510003-7
APPROVED FOR RELEASE: Thursday, September 26, 2002 CIA-RDP86-00513R001446510003-7

RYSHKOV, S. S.

2

✓ K Kombinatornoi Topologii Gil'bertova Prostranstva. S. S. Ryshkov. *AN SSSR*

Dokl., May 21, 1967, pp. 400-402. In Russian. Discussion of the combinational topology of Hilbert space.

16 16

EL

"APPROVED FOR RELEASE: Thursday, September 26, 2002 CIA-RDP86-00513R001446510003-7
APPROVED FOR RELEASE: Thursday, September 26, 2002 CIA-RDP86-00513R001446510003-7"

RYSHKOV, S.S.

On the combinatorial topology of Hilbert space. Dokl. AN SSSR 114 no.3:494-497 My '57. (MLRA 10:8)

1. Moskovskiy gosudarstvennyy universitet im. M.V. Lomonosova. Predstavleno akademikom P.S. Aleksandrovym.
(Topology) (Hilbert space)

"APPROVED FOR RELEASE: Thursday, September 26, 2002 CIA-RDP86-00513R001446510003-7
APPROVED FOR RELEASE: Thursday, September 26, 2002 CIA-RDP86-00513R001446510003-7"

20-114-3-12/60

AUTHOR: Ryshkov, S. S.

TITLE: On the Combinatorial Topology of the Hilbertian Space (K kombinatornoy topologii Gil'bertova prostranstva)

PERIODICAL: Doklady Akademii Nauk SSSR,1957,Vol.114,Nr 3,pp.494-497(USSR)

ABSTRACT: The present report shortly treats the proof of the invariance (at different "cell-divisions") of the group of co-homologies of the infinitely-dimensional sets. The external homologous groups of any closed set F which lie in the Gil'bertian (recte: Hilbertian) space are also determined. Theorem: A certain set P C H may be able to be represented in the form of conclusions of the bodies of the closed subcomplexes K_1 and K_2 of any "cell-divisions" of the Gil'bertian (recte:Hilbertian) space. Then at any r the relation $rH(K_1) \sim {}_rH(K_2)$ applies, where ${}_rH(K)$ signifies the in an earlier paper r-defective group of the homologies of the complex (which was taken over any group of coefficients). Different conceptions are then defined for the proof of this theorem: cell-like representation, cell-like with regard to a pair of cells, degree of the cell-

APPROVED FOR RELEASE: Thursday, September 26, 2002 CIA-RDP86-00513R001446510003-7
APPROVED FOR RELEASE: Thursday, September 26, 2002 CIA-RDP86-00513R001446510003-7"

AUTHOR RYSHKOV, S.S. 20-5-12/60

TITLE On a Class of Continuous Mappings of some ω-dimensional Sets.
(Ob odnom klasse nepreryvnykh otobrazheniy nekotorykh beskonechnomernykh mnozhestv. - Russian)

PERIODICAL Doklady Akademii Nauk SSSR 1957, Vol 114, Nr 5, pp 961-963 (USSR)

ABSTRACT The present paper defines a Λ-class of the images of sunquantities in Hilbert's space H. This class is, apart from other reasons, interesting because in the case of the homeomorphous H-polyhedra contained in this class the ω - dimensional sets of homologies are isomorphous. Any image $\varphi: M \longrightarrow H$, which has the shape $\lambda e + a$, here belongs to class Λ. Here λ denotes a parallel number, a - a continuous image of the quantity $M \subset H$ on a compact e - the identical image. First, definitions for the classes Λ & $\mathfrak{B}$ and Λ are given, the conditions belonging to these definitions are enumerated. The following theorem applies: If the image $\varphi: M \longrightarrow H$ belongs to class Λ such a Base $\mathfrak{B}$ is found for every base $\mathfrak{B}$ that

$$\varphi \in \Lambda_{\mathfrak{B}, \mathfrak{B}}$$ applies.

Several lemmata and examples are given. In conclusion the

CARD 1/2

"APPROVED FOR RELEASE: Thursday, September 26, 2002 CIA-RDP86-00513R001446510003-7
APPROVED FOR RELEASE: Thursday, September 26, 2002 CIA-RDP86-00513R001446510003-7"

20-5-12/60

On a Class of Continuous Mappings of some co- dimensional Sets.

author mentions two invariance theorems and outlines their proofs.
(No Illustrations)

ASSOCIATION: Moscow State University "M.V. LOMONOSOV"
(Moskovskiy gosudarstvennyy universitet M.V. Lomonosova)
PRESENTED BY: P.S. ALEKSANDROV, member of the A cademy, 28.12.1956
SUBMITTED: 26.12.1956
AVAILABLE: Library of Congress

CARD 2/2

"APPROVED FOR RELEASE: Thursday, September 26, 2002 CIA-RDP86-00513R001446510003-7
APPROVED FOR RELEASE: Thursday, September 26, 2002 CIA-RDP86-00513R001446510003-7"

GOLDOVSKIY, Ye.M.; RYSHKOV, S.S.

Objective distortions of the screen image in the case of vertical and horizontal projection angles. Part 3: Curved screens. Zhur. nauch. i prikl. fot.i kin. 6 no.1:53-60 Ja-F '61. (MIRA 14:3)

1. Vsesoyuznyy gosudarstvennyy institut kinematografii (VGIK).
(Motion-picture screens)(Motion-picture projection)

"APPROVED FOR RELEASE: Thursday, September 26, 2002 CIA-RDP86-00513R001446510003-7
APPROVED FOR RELEASE: Thursday, September 26, 2002 CIA-RDP86-00513R001446510003-7"

RYSHKOV, V., polkovnik

Our experience in increasing maneuverability. Voen. vest. 41 no.4:81-84 Ap '62. (MIRA 15:4)
(Artillery, Field and mountain)

APPROVED FOR RELEASE: Thursday, September 26, 2002 | CIA-RDP86-00513R001446510003-7
APPROVED FOR RELEASE: Thursday, September 26, 2002 | CIA-RDP86-00513R001446510003-7

Virus of tobacco mosaic tested for its power of fermentative activity. V. L. Ryshkov and K. S. Sukhov. *Compt. rend. acad. sci. U. R. S. S.* 21, 265–8(1938)(in English).—Tests on the virus of tobacco mosaic showed no effect characteristic of oxidase, peroxidase, catalase, protease, asparaginase, urease, amylase, chlorophyllase or phosphatase even under conditions most conducive to their activity.

A. H. Krappe

"APPROVED FOR RELEASE: Thursday, September 26, 2002 CIA-RDP86-00513R001446510003-7
APPROVED FOR RELEASE: Thursday, September 26, 2002 CIA-RDP86-00513R001446510003-7"

RYSHKOV, V.L.; BESKINA, S.R.

Effect of metabolites and antimetabolites on the reproduction of the tobacco mosaic virus in isolated tomato rootlets. Dokl. AN SSSR 146 no.4:921-924 O '62. (MIRA 15:11)

1. Institut virusologii im. D.I. Ivanovskogo AMN SSSR.
2. Chlen-korrespondent AN SSSR (for Lyzhkov).

(TOBACCO MOZAIC VIRUS)
(TISSUE CULTURE)

APPROVED FOR RELEASE: Thursday, September 26, 2002 | CIA-RDP86-00513R001446510003-7

A new method for the purification of the tobacco mosaic virus. V. L. Ryabkov and E. P. Gromyko. *Compt. rend. acad. sci. U. R. S. S.* **19**, 203-5(1938) (in English).—The leaves and stalks of diseased tobacco or tomato plants were frozen, 328 g. was extd. twice with 250 cc. portions of 0.1 *M* Na_2HPO_4. The ext. was filtered through paper and a soln. of benzoic acid dissolved in $NaHCO_3$ (0.6 g. per g. of benzoic acid) was added at the rate of 1.5-2 g. acid per 100 cc. of ext. After mixing, *N* HCl was added until crystals of benzoic acid appeared. These were filtered off and redissolved in a min. quantity of 0.1 *M* Na_2HPO_4 and the pigments were removed by 2 treatments with activated charcoal. For exts. rich in pigment, 4% and 2% of charcoal were used, for exts. low in pigment, 2% and 1% were sufficient. The virus was then crystd. by Stanley's method (*C. A.* **30**, 5013[3]). Extn. of the benzoic acid and pigments from the aq. soln. with ether were not satisfactory, owing to loss of virus. Salicylic acid might be used instead of benzoic acid. N. McK., Jr.

"APPROVED FOR RELEASE: Thursday, September 26, 2002 CIA-RDP86-00513R001465110003-7
APPROVED FOR RELEASE: Thursday, September 26, 2002 CIA-RDP86-00513R001465110003-7

A new method for the purification of the tobacco mosaic virus. V. L. Ryshkov and E. P. Gremyko. *Compt. rend. acad. sci. U. R. S. S.* 19, 203–5(1938) (in English).—The leaves and stalks of diseased tobacco or tomato plants were frozen, 328 g. was extd. twice with 250 cc. portions of 0.1 *M* Na_2HPO_4. The ext. was filtered through paper and a soln. of benzoic acid dissolved in $NaHCO_3$ (0.6 g. per g. of benzoic acid) was added at the rate of 1.5–2 g. acid per 100 cc. of ext. After mixing, *N* HCl was added until crystals of benzoic acid appeared. These were filtered off and redissolved in a min. quantity of 0.1 *M* Na_2HPO_4 and the pigments were removed by 2 treatments with activated charcoal. For exts. rich in pigment, 4% and 2% of charcoal were used, for exts. low in pigment, 2% and 1% were sufficient. The virus was then crystd. by Stanley's method (*C. A.* 30, 5013[3]). Extn. of the benzoic acid and pigments from the aq. soln. with ether were not satisfactory, owing to loss of virus. Salicylic acid might be used instead of benzoic acid. N. McK., Jr.

"APPROVED FOR RELEASE: Thursday, September 26, 2002 CIA-RDP86-00513R001446510003-7
APPROVED FOR RELEASE: Thursday, September 26, 2002 CIA-RDP86-00513R001446510003-7"

RYSHKOV, V.L.; MARCHENKO, N.K.

Reversible inhibition of multiplication of the tobacco mosaic virus in tobacco leaves. Dokl. AN SSSR 137 no.4:986-988 Ap '61. (MIRA 14:3)

1. Institut virusologii im. D. I. Ivanovskogo AMN SSSR.
(TOBACCO MOASIC VIRUS)
(SULFANILAMIDE)

"APPROVED FOR RELEASE: Thursday, September 26, 2002 CIA-RDP86-00513R001446510003-7
APPROVED FOR RELEASE: Thursday, September 26, 2002 CIA-RDP86-00513R001446510003-7"

CA RYSHKOV V. V. 14

Container for colloidal graphite to be charged into steam boilers for water treatment. V. V. Ryshkov. Russ. 26,303, April 14, 1930.

ASM-SLA METALLURGICAL LITERATURE CLASSIFICATION

"APPROVED FOR RELEASE: Thursday, September 26, 2002 CIA-RDP86-00513R001446510003-7
APPROVED FOR RELEASE: Thursday, September 26, 2002 CIA-RDP86-00513R001446510003-7"

RYSHKOVA, L.K.; US, L.A.

Effect of cancerogenic hydrocarbons on regeneration. Uch.zap. KHGU 51:97-102 '54. (MIRA 11:11)
(Regeneration (Biology)) (Carcinogens) (Urodela)

APPROVED FOR RELEASE: Thursday, September 26, 2002 CIA-RDP86-00513R001446510003-7
APPROVED FOR RELEASE: Thursday, September 26, 2002 CIA-RDP86-00513R001446510003-7"

BERESHEVICH, I.I., kandidat tekhnicheskikh nauk; BOGIN, N.H., kandidat tekhnicheskikh nauk; BYKOV, Ye.I., inzhener; VLASOV, I.I., kandidat tekhnicheskikh nauk; GRITSEVSKIY, M.Ye., inzhener; GRUBER, L.O., inzhener. GURVICH, V.G., inzhener; DAVYDOV, V.N., inzhener; YERSHOV, I.M., kandidat tekhnicheskikh nauk; ZASORIN, S.N., kandidat tekhnicheskikh nauk; IVANOV, I.I., kandidat tekhnicheskikh nauk; KRAUKLIS, A.A., inzhener; KROPOV, L.B., inzhener; LAPIN, V.B., inzhener; LASTOVSKIY, V.P., dotsent; LATUNIN, N.I., inzhener; MARKVARDT, K.G., professor, doktor tekhnicheskikh nauk; MAKHAYLOV, M.I., professor, doktor tekhnicheskikh nauk; NIKANOROV, V.A., inzhener; OSKOLKOV, K.N., inzhener; OKHOSHIN, L.I., inzhener; PARFENOV, K.A., dotsent, kandidat tekhnicheskikh nauk; PERTSOVSKIY, L.M., inzhener; POPOV, I.P., inzhener; PORSHNEV, B.G., inzhener; RATNER, M.P., inzhener; ROSSIYSKIY, G.I., dotsent, kandidat tekhnicheskikh nauk; RYKOV, I.I., kandidat tekhnicheskikh nauk; RYSHKOVSKIY, I.Ya., dotsent, kandidat tekhnicheskikh nauk; RYABKOV, A.Ya., professor [deceased]; TAGER, S.A., kandidat tekhnicheskikh nauk; KHAZEN, M.M., professor, doktor tekhnicheskikh nauk; CHERNYSHEV, M.A., doktor tekhnicheskikh nauk; EDIN, L.Ye., professor, doktor tekhnicheskikh nauk; YUZHNEV, B.N., dotsent; AKSENOV, I.Ya., dotsent, kandidat tekhnicheskikh nauk; ARKHANGEL'SKIY, A.S., inzhener; BARTENEV, P.V., professor, doktor tekhnicheskikh nauk; BERNGARD, K.A., kandidat tekhnicheskikh nauk; BOROVOY, N.Ye., dotsent, kandidat tekhnicheskikh nauk; BOGDANOV, I.A., inzhener; BOGDANOV, N.K., kandidat tekhnicheskikh nauk; VINNICHENKO, N.G., dotsent, kandidat ekonomicheskikh nauk;

(Continued on next card)

"APPROVED FOR RELEASE: Thursday, September 26, 2002 CIA-RDP86-00513R001446510003-7
APPROVED FOR RELEASE: Thursday, September 26, 2002 CIA-RDP86-00513R001446510003-7"

VASIL'YEV, V.F.; GONCHAROV, N.G., inzhener; DERIBAS, A.T., inzhener; DOBROSEL'SKIY, K.M., dotsent, kandidat tekhnicheskikh nauk; DLUGACH, B.A., kandidat tekhnicheskikh nauk; YEFIMOV, G.P., kandidat tekhnicheskikh nauk; ZEMBLINOV, S.V., professor, doktor tekhnicheskikh nauk; ZABELLO, M.L., kandidat tekhnicheskikh nauk; IL'IN, K.P., kandidat tekhnicheskikh nauk; KARETNIKOV, A.D., kandidat tekhnicheskikh nauk; KAPLUN, F.Sh., inzhener; KANSHIN, M.D.; KOCHNEV, P.P., professor, doktor tekhnicheskikh nauk; KOGAN, L.A., kandidat tekhnicheskikh nauk; KUCHURIN, S.F., inzhener; LEVASHOV, A.D., inzhener; MAKSIMOVICH, B.M., dotsent, kandidat tekhnicheskikh nauk; MARTYNOV, M.S., inzhener; MEDKL', O.M., inzhener; NIKITIN, V.D., professor, kandidat tekhnicheskikh nauk; PADNYA, V.A., inzhener; PANTELEYEV, P.I., kandidat tekhnicheskikh nauk; PETROV, A.P., professor, doktor tekhnicheskikh nauk; POVOROZHENKO, V.V., professor, doktor tekhnicheskikh nauk; PISKAREV, I.I., dotsent, kandidat tekhnicheskikh nauk; SERGEYEV, Ye.S., kandidat tekhnicheskikh nauk; SIMONOV, K.S., kandidat tekhnicheskikh nauk; SIMANOVSKIY, M.A., inzhener; SUYAZOV, I.G., inzhener; TAIDAYEV, F.Ya., inzhener; TIKHONOV, K.K., kandidat tekhnicheskikh nauk; USHAKOV, N.Ya., inzhenr; USPENSKIY, V.K., inzhener; FEL'DMAN, E.D., kandidat tekhnicheskikh nauk; FERAPONTOV, G.V., inzhener; KHOKHLOV, L.P., inzhenr; CHERNOMORDIK, G.I., professor, doktor tekhnicheskikh nauk; SHAMAYEV, M.F., inzhener; SHAFIRKIN, B.I., inzhener; YAKUSHIN, S.I., inzhener; GRANOVSKIY, P.G., redaktor; TISHCHENKO, A.I., redaktor; ISAYEV, I.P., dotsent, kandidat tekhnicheskikh nauk, redaktor; KLIMOV, V.F., dotsent kandidat tekhnicheskikh

(Continued on next card)

"APPROVED FOR RELEASE: Thursday, September 26, 2002 CIA-RDP86-00513R001446510003-7
APPROVED FOR RELEASE: Thursday, September 26, 2002 CIA-RDP86-00513R001446510003-7"

BENESHEVICH, I.I.--- (continued) Card 3.

nauk, redaktor; MARKOV, N.V., inzhener, redaktor; KALININ, V.K., inzhener, redaktor; STEPANOV, V.N., professor, redaktor; SIDOROV, N.I., inzhener, redaktor; GERONIMUS, B.Ye., kandidat tekhnicheskikh nauk, redaktor; ROBEL', R.I., otvetstvennyy redaktor

[Technical reference manual for railroad engineers] Tekhnicheskii spravochnik zheleznodorozhnika. Moskva, Gos. transp.zhel-dor. izd-vo. Vol.10. [Electric power supply for railroads] Energosnabzhenie zheleznykh dorog. Otv.red. toma K.G.Markvardt. 1956. 1080 p. Vol.13. [Operation of railroads] Ekspluatatsiia zheleznykh dorog. Otv. red. toma R.I.Robel'. 1956. 739 p. (MLRA 10:2)

1. Chlen-korrespondent Akademii nauk SSSR (for Petrov)
(Electric railroads) (Railroads--Management)

"APPROVED FOR RELEASE: Thursday, September 26, 2002 CIA-RDP86-00513R001446510003-7
APPROVED FOR RELEASE: Thursday, September 26, 2002 CIA-RDP86-00513R001446510003-7"

RYSHKOVSKIY, I. IA.

Ocherednye zadachi elektrifikatsii zheleznykh dorog SSSR. [The next problems of railroad electrification in USSR]. (Sots. transport, 1934, no. 5, p.55-56).
DLC: HE7S6

SO: Soviet Transportation and Communications, A Bibliography, Library of Congress, Reference Department, Washington, 1952, Unclassified,

"APPROVED FOR RELEASE: Thursday, September 26, 2002 CIA-RDP86-00513R001446510003-7
APPROVED FOR RELEASE: Thursday, September 26, 2002 CIA-RDP86-00513R001446510003-7"

RYSHKOVSKIY, I. IA.

Tiagovye podstantsii. [Traction substations]. Dopushcheno v kachestve ucheb. posobiia dlia intov zhel-dor. transporta. Moskva, Gos. transp. zhel-dor. izd-vo, 1949. 347 p. diagrs

DLC: TF863.R9

SO: Soviet Transportation and Communications, A Bibliography, Library of Congress, Reference Department, Washington, 1952, Unclassified.

"APPROVED FOR RELEASE: Thursday, September 26, 2002 CIA-RDP86-00513R001446510003-7
APPROVED FOR RELEASE: Thursday, September 26, 2002 CIA-RDP86-00513R001446510003-7"

RYSHKOVSKIY, I. Ya.

166T13

USSR/Electricity - Demand Factor Sep 50
Repair Shops, Railroad

"Method of Determining the Demand Factor," Docents, I. Ya. Ryshkovskiy, P. F. Matsepon, Dnepropetrovsk Inst of RR Engineers

"Prom Energet" No 9, pp 8-9

Describes mathematical determination of demand factor and details rated capacity and demand factor worked out for motors used in pumps, compressors, presses, lathes, hammers, and cranes of typical railroad car repair plant. Demand factors were calculated for 60-min load maximums.

166T13

APPROVED FOR RELEASE; Thursday, September 26, 2002 CIA-RDP86-00513R001446510003-7
APPROVED FOR RELEASE: Thursday, September 26, 2002 CIA-RDP86-00513R001446510003-7"

RYSHKOVSKIY, I. YA.

AID P - 629

Subject : USSR/Electricity

Card 1/1 Pub. 27 - 33/35

Authors : Volobrinskiy, S. D., Kand. of Tech. Sci., Dotsent and Zvezdkin, M. N., Eng., Leningrad

Title : I. Ya. Ryshkovskiy and K. G. Kuchma: "Traction Substations", 487 pp., 1953 (Bibliography)

Periodical : Elektrichestvo, 8, 94-95, Ag 1954

Abstract : An extensive review of the book with some criticism is presented.

Institution : Leningrad Institute of Engineers of Railroad Transportation

Submitted : No date

"APPROVED FOR RELEASE: Thursday, September 26, 2002 CIA-RDP86-00513R001446510003-7
APPROVED FOR RELEASE: Thursday, September 26, 2002 CIA-RDP86-00513R001446510003-7"

Ryshkovskiy, I. Ya.

AID P - 2018

Subject : USSR/Electricity

Card 1/1 Pub. 27 - 22/31

Authors : Ryshkovskiy, I. Ya., Kand. of Tech. Sci., Dotsent, Kuchma, K. G., Dotsent, and Miroshnichenko, R. I., Kand. of Tech. Sci.

Title : Book Traction Substations (Book Review by S. D. Volobrinskiy and M. N. Zvezdkin, this journal, No.8, 1954) (Discussion)

Periodical : Elektrichestvo, 4, 81-82, Ap 1955

Abstract : The authors of the book disagree with several of the criticisms made by the reviewers of their book. They discuss the main criticisms and present their own point of view.

Institution: Dnepropetrovsk Institute of Engineers of Railway Transportation and Central Scientific Research Institute of the Ministry of Transportation

Submitted : No date

"APPROVED FOR RELEASE: Thursday, September 26, 2002 CIA-RDP86-00513R001446510003-7
APPROVED FOR RELEASE: Thursday, September 26, 2002 CIA-RDP86-00513R001446510003-7"

RYSHKOVSKIY, I.Y., kand. tekhn. nauk, dotsent

Errors of d.c. meters with an electrodynamic system. Izv. vys. ucheb. zav.; energ. 8 no.5:98-101 My '65. (MIRA 18:6)

1. Dnepropetrovskiy institut inzhenerov zheleznodorozhnogo transporta. Predstavlena kafedroy elektrosnabzheniya.

"APPROVED FOR RELEASE: Thursday, September 26, 2002 CIA-RDP86-00513R001446510003-7
APPROVED FOR RELEASE: Thursday, September 26, 2002 CIA-RDP86-00513R001446510003-7"

RYSHKOVSKIY, I.Ya., kand. tekhn. nauk

Unutilized potentials of d.c. systems and the distributive power supply to the overhead contact network. Trudy DIIT no.24:172-197 '54. (MIRA 16:11)

"APPROVED FOR RELEASE: Thursday, September 26, 2002 CIA-RDP86-00513R001446510003-7
APPROVED FOR RELEASE: Thursday, September 26, 2002 CIA-RDP86-00513R001446510003-7"

RYSEVA, S.N., inzh.

Economic efficiency of using synthetic fibers in the assortment of wool fabrics. Nauch.-issl.trudy TSNIIShersti no.18:153-164 '63. (MIRA 18:1)

"APPROVED FOR RELEASE: Thursday, September 26, 2002 CIA-RDP86-00513R001446510003-7
APPROVED FOR RELEASE: Thursday, September 26, 2002 CIA-RDP86-00513R001446510003-7"

RYSEVA, V. I.

USSR/Metals
Steel - Hardness
Dies - Hardening

Mar/Apr 47

"Influence of Hardness of Steel on the Resistance of Pressed Dies and Drills," A. K. Chertavskikh, Cand Tech Sci, V. I. Ryseva, V. V. Yakovlev, GiproTsvetMetObrabotka, 3½ pp

"Tsvetnye Metally" No 2

Discussion of results of experiments on the influence of hardness of steel on resistance of pressed dies and drills. Tables are presented of the results of using steel of various types as well as steel which has been reworked from old dies and drills.

PA 28T64

"APPROVED FOR RELEASE: Thursday, September 26, 2002 CIA-RDP86-00513R001446510003-7
APPROVED FOR RELEASE: Thursday, September 26, 2002 CIA-RDP86-00513R001446510003-7"

PA 169T47

RYSEVA, V. I.

USSR/Metals - Testing, Equipment Aug 50

"Checking a Tribometer for Determination of External Friction of Metals," A. K. Chartavskiy, V. I. Ryseva, Sci Res Inst for Processing Non-ferrous Metals.

"Zavod Lab" Vol XVI, No 8, pp 1017-1018

Describes tribometer constructed by I. V. Kragel'skiy and improved by V. D. Sedov and V. V. Sedova. Deals with experiments for studying relation between the friction coefficient and thickness and chemical nature of oxide films on surfaces. Coefficients of external friction for Cu and Ni in pairs with steel balls of d = 7.2 mm were determined. Simultaneously, Cu rods were drawn through pobedit die for comparing coefficient of friction with drawing force.

PA 169T47.

"APPROVED FOR RELEASE: Thursday, September 26, 2002 CIA-RDP86-00513R001446510003-7
APPROVED FOR RELEASE: Thursday, September 26, 2002 CIA-RDP86-00513R001446510003-7"

RYSEVA, Ye.S., starshiy nauchnyy sotrudnik

"Blood transfusion in the struggle for life and health" by P.M.Maksimov. Reviewed by E.S.Ryseva. Med.sestra 16 no.6:26 Je '57. (MLRA 10:8)

(BLOOD--TRANSFUSION) (MAKSIMOV, P.M.)

"APPROVED FOR RELEASE: Thursday, September 26, 2002 CIA-RDP86-00513R001446510003-7
APPROVED FOR RELEASE: Thursday, September 26, 2002 CIA-RDP86-00513R001446510003-7"

RYSEVA, Ye.S.

Session on rheumatic fever in children. Vest.AMN SSSR 13 no.8:57-61 '58 (MIRA 11:8)

(RHEUMATIC FEVER)

"APPROVED FOR RELEASE: Thursday, September 26, 2002 CIA-RDP86-00513R001446510003-7
APPROVED FOR RELEASE: Thursday, September 26, 2002 CIA-RDP86-00513R001446510003-7"

RYSEVA, Ye.S., dots.

Status of the cardiovascular system in tuberculous meningitis in children during streptomycin therapy. [with summary in French] Probl.tub. 36 no.6:50-55 '58 (MIRA 11:10)

1. Iz kafedry detskikh bolezney Omskogo meditsinskogo instituta imeni M.I. Kalinina (nachnyy rukovoditel' raboty - chlen-korrespondent AMN SSSR prof. O.D. Sokolova-Ponomareva).

(TUBERCULOSIS, MENINGEAL, in inf. & child.
ther., streptomycin, eff. on cardiovasc. system (Rus))
(CARDIOVASCULAR, SYSTEM, in various dis.
meningeal tuberc. in child., eff. of streptomycin (Rus))

"APPROVED FOR RELEASE: Thursday, September 26, 2002 CIA-RDP86-00513R001446510003-7
APPROVED FOR RELEASE: Thursday, September 26, 2002 CIA-RDP86-00513R001446510003-7"

RYSEVA, Ye.S., starshiy nauchnyy sotrudnik

Results of a session on rheumatic fever in children. Pediatriia 36 no.7:91-93 Je '58 (MIRA 11:7)
(RHEUMATIC FEVER)

"APPROVED FOR RELEASE: Thursday, September 26, 2002 CIA-RDP86-00513R001446510003-7
APPROVED FOR RELEASE: Thursday, September 26, 2002 CIA-RDP86-00513R001446510003-7"

RYSKVA, Ye.S.

Use of antihistamines in rheumatic fever and other allergic conditions in children. Pediatriia 37 no.7:60-64 Jl '59. (MIRA 12:10)

1. Iz kliniki starshego detskogo vozrasta Instituta pediatrii AMN SSSR (dir. - chlen-korrespondent AMN SSSR prof.O.D.Sokolova-Ponomareva).

(ANTIHISTAMINICS, ther. use,
allergy & rheum. in child. (Rus))
(ALLERGY, in inf. & child.
antihistaminic ther. (Rus))
(RHEUMATISM, in inf. & child,
same)

"APPROVED FOR RELEASE: Thursday, September 26, 2002 CIA-RDP86-00513R001446510003-7
APPROVED FOR RELEASE: Thursday, September 26, 2002 CIA-RDP86-00513R001446510003-7"

RYSEVA, Ye.S., kand.med.nauk; MIYESEROVA, Ye.K., kand.med.nauk

Effect of various types of treatment of the dynamics of immunological indices in rheumatic fever in children. Vest.AMN SSSR 15 no.3:45-52 '60. (MIRA 14:5)

1. Institut pediatrii AMN SSSR.
(RHEUMATIC FEVER) (HORMONES)

"APPROVED FOR RELEASE: Thursday, September 26, 2002 CIA-RDP86-00513R001446510003-7
APPROVED FOR RELEASE: Thursday, September 26, 2002 CIA-RDP86-00513R001446510003-7"

SOKOLOVA-PONOMAREVA, O.D.; RYSEVA, Ye.S.; EDEL'MAN, Z.I.

Advanced training for rheumatic fever specialists working in pediatric institutions. Vop. okh. mat. i det. 6 no.5:72-76 My '61. (MIRA 14:10)

1. Iz Instituta pediatrii AMN SSSR (direktor - deystvitel'nyy chlen AMN SSSR prof. O.D.Sokolova-Ponomareva) i Nauchno-issledovatel'skogo instituta pediatrii RSFSR (direktor - doktor med.nauk A.P.Chernikova) na baze 1-y Detskoy klinicheskoy bol'nitsy (glavnyy vrach - zasluzhennyy vrach RSFSR Ye.V. Prokhorovich).

(RHEUMATIC FEVER) (PEDIATRICS--STUDY AND TEACHING)

"APPROVED FOR RELEASE: Thursday, September 26, 2002 CIA-RDP86-00513R001446510003-7
APPROVED FOR RELEASE: Thursday, September 26, 2002 CIA-RDP86-00513R001446510003-7

L 24520-66 EWT(1)/T JK

ACC NR: AP6009527 (N) SOURCE CODE: UR/0413/66/000/005/0049/0049

INVENTOR: Bardyshev, I. I.; Rysev, M. A.; Shint, A. A.; Kanykina, T. D.; Parmon, A. I.; Geller, A. A.

ORG: none

TITLE: Method of stabilization of sticky material [announced by the Institute of Physical and Organic Chemistry AN BSSR (Institut fiziko-organicheskoy khimii AN BSSR)] Class 22, No. 179407

SOURCE: Izobreteniya, promyshlennyye obraztsy, tovarnyye znaki, no. 5, 1966, 49

TOPIC TAGS: insect control, stabilization

ABSTRACT: An Author Certificate has been issued for a method of stabilizing sticky material containing colophony for insect control. To increase the stability of the material, the colophony is modified at 170 to 300C with 0.5--2% zinc chloride. [NT]

SUB CODE: 11, 07/ SUBM DATE: 22Jan65/

Card 1/1 BLG UDC: 547.914.2-171:632-952

"APPROVED FOR RELEASE: Thursday, September 26, 2002 CIA-RDP86-00513R001446510003-7
APPROVED FOR RELEASE: Thursday, September 26, 2002 CIA-RDP86-00513R001446510003-7"

RYSEVA, Ye.S., starshiy nauchnyy sotrudnik; VOLKOVA, Z.I., starshyy laborant

Functional state of the adrenal cortex in healthy and rheumatic children. Vop.okh.mat. i det. 8 no.2:11-16 F'63. (MIRA 16:7)

1. Iz otdeleniya detskogo vozrasta (zav. - deystvitel'nyy chlen AMN SSSR prof. O.D. Sokolova-Ponomareva) i biokhimicheskoy laboratorii (zav. - doktor biolog. nauk A.A. Titayev) Instituta pediatrii (dir. - dotsent M. Ya. Studenikin) AMN SSSR.

(ADRENAL CORTEX) (RHEUMATIC FEVER)

"APPROVED FOR RELEASE: Thursday, September 26, 2002 CIA-RDP86-00513R001446510003-7
APPROVED FOR RELEASE: Thursday, September 26, 2002 CIA-RDP86-00513R001446510003-7"

RYSH, P.

Formation of nucleus in the secondary graphitization of magnesium cast iron. Lit. proizv. no.6:37-40 Je '61. (MIRA 14:6)
(Cast iron--Metallography)

APPROVED FOR RELEASE: Thursday, September 26, 2002 CIA-RDP86-00513R001446510003-7
APPROVED FOR RELEASE: Thursday, September 26, 2002 CIA-RDP86-00513R001446510003-7

L 23090-65 EWT(m)/EWA(d)/EWP(t)/EWP(b) JD/WB

ACCESSION NR: AP4048317 Z/0065/64/000/005/0433/0444

AUTHOR: Lobl, K. (Lebl, K.); Tuma, H. (Tuma, G.); Rysava, M. (Ryshava, M.) B

TITLE: Study of the aging of Cr18Ni9Ti corrosion-resistant steel 18

SOURCE: Kovove materialy, no. 5, 1964, 433-444

TOPIC TAGS: carbide precipitation, structural component, structural process, metallographic investigation, electron microscopy, optical microscopy, isothermal annealing, chromium carbide, space diagram, understabilized steel, overstabilized steel

ABSTRACT: This article deals with the precipitation of the two carbides MC and $M_{23}C_6$, which are the most important structural components from the point of view of intercrystalline corrosion and mechanical properties. The kinetics of the precipitation of carbides of this type were investigated in two melts containing titanium above and below the limit prescribed for the so-called stabilization of carbon. The original material was in the form of round steel bars measuring 25 and 30 mm in diameter. The structural processes during annealing, especially the precipitation of the carbides, were investigated metallographically (by optical

Card 1/3

APPROVED FOR RELEASE: Thursday, September 26, 2002 CIA-RDP86-00513R001446510003-7
APPROVED FOR RELEASE: Thursday, September 26, 2002 CIA-RDP86-00513R001446510003-7

L 23090-65

ACCESSION NR: AP4048317

and electron microscopy with the aid of carbon extraction pictures), and by electrolytical separation. The specimens were isothermally annealed at temperatures from 450 to 1000C over periods of from 300 to 1000 hr. The changes of mechanical properties and the number of structural components present were determined. The results may be summarized as follows: 1) at low temperatures and short annealing periods the delta ferrite remains in the structure; raising the temperature and prolonging the annealing temperature brings on the sigma phase; 2) at temperatures of maximum carbide precipitation (750 -- 800C) chromium carbide precipitated in the understabilized steel in the form of bars of parallel oriented particles; in overstabilized steel the chromium carbide disappears at these temperatures because practically all of the carbon is absorbed by the titanium in the formation of Ti(C,N); 3) the space diagrams showing the precipitated quantities of the individual phases (above all of Ti(C, NO and $M_{23}C_6$) as a function of temperature and isothermal annealing time were plotted from the results of the isolation of the individual structural components; 4) of the mechanical properties, impact strength is particularly dependent on temperature and isothermal annealing time. Orig. art. has: 6 figures and 3 tables.

Card 2/3

APPROVED FOR RELEASE: Thursday, September 26, 2002 CIA-RDP86-00513R001446510003-7
APPROVED FOR RELEASE: Thursday, September 26, 2002 CIA-RDP86-00513R001446510003-7

L 23090-65

ACCESSION NR: AP4043317

ASSOCIATION: Statni vyzkumny ustav materialu i technologie, Prague (State Research Institute for Materials and Technology)

SUBMITTED: 25Apr64 ENCL: 00 SUB CODE: MM

NO REF SOV: 000 OTHER: 003

Card 3/3

"APPROVED FOR RELEASE: Thursday, September 26, 2002 CIA-RDP86-00513R001446510003-7
APPROVED FOR RELEASE: Thursday, September 26, 2002 CIA-RDP86-00513R001446510003-7"

RYSHAVY, D. [Rysavy, D.]

Oxidation of hydrocarbons in the presence of inhibitors. Vysokom. soed. 3 no.3:464-469 Mr '61. (MIRA 14:6)

1. Nauchno-issledovatel'skiy institut makromolekulyarnoy khimii, Brno, Chekhoslovakiya.
(Hydrocarbons) (Antioxidants)

"APPROVED FOR RELEASE: Thursday, September 26, 2002 CIA-RDP86-00513R001446510003-7
APPROVED FOR RELEASE: Thursday, September 26, 2002 CIA-RDP86-00513R001446510003-7"

RYSHAVY, D. [Rysavy, D.]; BALABAN, L.

Effect of polymerization catalysts on the degradation rate of isotactic polypropylene. Vysokom.soed. 3 no.3:470-474 Mr '61. (MIRA 14:6)

1. Nauchno-issledovatel'skiy institut makromolekulyarnoy khimii Brno, Chekhoslovakiya.
(Polymerization) (Catalysts) (Propene)

"APPROVED FOR RELEASE: Thursday, September 26, 2002 CIA-RDP86-00513R001446510003-7
APPROVED FOR RELEASE: Thursday, September 26, 2002 CIA-RDP86-00513R001446510003-7"

RYSHAVY, D.; BALABAN, L.; SLAVIK, V.; RUZHA, Ya.

Oxidation of isotactic polypropylene. Vysokom.soed. 3 no.7: 1110-1115 Jl '61. (MIRA 14:6)

1. Nauchno-issledovatel'skiy institut makromolekulyarnoy khimii, Brno.

(Propene) (Oxidation)

"APPROVED FOR RELEASE: Thursday, September 26, 2002 CIA-RDP86-00513R001446510003-7
APPROVED FOR RELEASE: Thursday, September 26, 2002 CIA-RDP86-00513R001446510003-7"

RYSHAVYI, B.; MIKHALSK, Ia.; FIDLER, V.

Possibility of adaptation of Amidostomum anseris (Zeder, 1800, Railliet and Henry, 1909 in birds other than geese. Fol.biol., Praha 1 no.5:276-281 Oct 55.

1. Biologicheskiy institut CHSAN, parazitologiya, Praga i Ptitsezavod, Libush

(PARASITES,
Amidostomum anseris, adaptation in birds other than geese)

"APPROVED FOR RELEASE: Thursday, September 26, 2002 CIA-RDP86-00513R001446510003-7
APPROVED FOR RELEASE: Thursday, September 26, 2002 CIA-RDP86-00513R001446510003-7"

SIVACHEK, N.I.; DEMCHENKO, V.F.; KRYMSKIY, I.I.; RYSHCHENKO, A.V.

Mechanizing the operation of shaft grates. Sbor.rats.predl. vnedr.v proizv. no.5:5-8 '60. (MIRA 14:8)

1. Trest "Dzerzhinskruda", rudoupravleniye "Ingulets".
(Mining machinery--Technological innovations)

"APPROVED FOR RELEASE: Thursday, September 26, 2002 CIA-RDP86-00513R001446510003-7
APPROVED FOR RELEASE: Thursday, September 26, 2002 CIA-RDP86-00513R001446510003-7"

RYSHCHENKO, P.G.; STREMOVSKIY, R.A.

Drying tiles on kiln cars. Stek. i ker. 19 no.6:35 Je '62.
(MIRA 15:7)

1. Khar'kovskiy plitochnyy zavod.
(Tiles) (Drying apparatus)

"APPROVED FOR RELEASE: Thursday, September 26, 2002 CIA-RDP86-00513R001446510003-7
APPROVED FOR RELEASE: Thursday, September 26, 2002 CIA-RDP86-00513R001446510003-7"

LIVSON, Z.A., kand. tekhn. nauk; RYSHCHENKO, M.I., inzh.

Quartz pelite as raw material for the manufacture of faience products. Stek. i ker. 22 no.4:20-23 Ap '65. (MIRA 18:5)

1. Khar'kovskiy politekhnicheskiy institut imeni V.I.Lenina.

"APPROVED FOR RELEASE: Thursday, September 26, 2002 CIA-RDP86-00513R001446510003-7
APPROVED FOR RELEASE: Thursday, September 26, 2002 CIA-RDP86-00513R001446510003-7"

GUDALIN, G. S., RYSHCHUK, N. A., SEMOVA, G. A.

Geography and Geology

Requirements of industry as to the quality of mineral raw materials. Handbook for geologists--Moskva, Gos. izd-vo geologicheskoi lit-ry Komiteta po delam geologii pri SNK SSSR, No. 25, Copper, 1947.

Monthly List of Russian Accessions, Library of Congress, October 1952. Unclassified.

"APPROVED FOR RELEASE: Thursday, September 26, 2002 CIA-RDP86-00513R001446510003-7
APPROVED FOR RELEASE: Thursday, September 26, 2002 CIA-RDP86-00513R001446510003-7"

ANTONYUK, I.D.; ORLOV, V.G.; SAMSONOV, A.V.; ASHIKHMIN, A.K., inzh., retsenzent; ZHIL'TSOV, P.N., inzh., retsenzent; KOZAK, V.A., inzh., retsenzent; POGODIN, A.M., inzh.; POTAPOV, V.P., inzh., retsenzent; RYSHCHUK, N.S., red.; BOBROVA, Ye.N., tekhn.red.

[Handbook for the station master] Spravochnik nachal'nika stantsii. Moskva, Transzheldorizdat, 1963. 571 p.
(MIRA 17:2)

"APPROVED FOR RELEASE: Thursday, September 26, 2002 CIA-RDP86-00513R001446510003-7
APPROVED FOR RELEASE: Thursday, September 26, 2002 CIA-RDP86-00513R001446510003-7"

KOLDOMASOV, Yu.I.; MILYUKIN. F.P., retsenzent; RYSHCHUK, N.S., red.; USENKO, L.A., tekhn.red.

[Comprehensive development of Soviet transportation] Kompleksnoe razvitie transporta SSSR. Moskva, Vses.izdatel'sko-poligr.ob"edinenie M-va putei soobshcheniia, 1961. 179 p. (MIRA 14:6)
(Transportation)

"APPROVED FOR RELEASE: Thursday, September 26, 2002 CIA-RDP86-00513R001446510003-7
APPROVED FOR RELEASE: Thursday, September 26, 2002 CIA-RDP86-00513R001446510003-7"

SHCHERBAKOV, Vasiliy Pavlovich, inzh.; RABINOVICH, Anisim Borisovich, inzh.; RYSHCHUK, N.S., inzh., red.; KHITROV, P.A., tekhn. red.

[Manual for the passenger car conductor] Rukovodstvo provodniku passazhirskikh vagonov. Izd. 4., perer. i dop. Moskva, Vses. izdatel'sko-poligr. ob"edinenie M-va putei soobshcheniia, 1960. 259 p. (MIRA 14:5)
(Railroad conductors) (Railroads--Passenger cars)

"APPROVED FOR RELEASE: Thursday, September 26, 2002 CIA-RDP86-00513R001446510003-7
APPROVED FOR RELEASE: Thursday, September 26, 2002 CIA-RDP86-00513R001446510003-7"

TRET'YAKOV, A.P.; RYSHCHUK, N.S., redaktor; BOBROVA, Ye.N., tekhnicheskiy redaktor

[Scientists and inventors in railroad transportation, collected articles] Uchenye i izobretateli zheleznodorozhnogo transporta; sbornik statei. Moskva, Gos. transp. zhel-dor. izd-vo, 1956. 227 p.
(Engineers) (Inventors) (Railroad research) (MLRA 10:4)

"APPROVED FOR RELEASE: Thursday, September 26, 2002 CIA-RDP86-00513R001446510003-7
APPROVED FOR RELEASE: Thursday, September 26, 2002 CIA-RDP86-00513R001446510003-7"

RYSHCHUK, N.S.; KRISHTAL', L.I., red.; [illegible]SENKO, L.A., tekhn. red.

[Calendar-handbook of the railroadman, 1962-1963]Kalendar'-spravochnik zheleznodorozhnika, 1962-1963. Moskva, Trans-zhelezdorizdat 1962. 350 p. (MIRA 15:9)
(Railroads--Handbooks, manuals, etc.)

"APPROVED FOR RELEASE: Thursday, September 26, 2002 CIA-RDP86-00513R001446510003-7
APPROVED FOR RELEASE: Thursday, September 26, 2002 (CIA-RDP86-00513R001446510003-7"

L 33868-66

ACC NR: AP6021489 SOURCE CODE: UR/0413/66/000/011/0140/0140

INVENTOR: Antonov, O. K.; Anisenko, V. G.; Bolbot, A. V.; Yeroshin, V. F.; Ryshik, Ya. I.; Tolmachev, V. I.

ORG: none

TITLE: Method of compensating for the aerodynamic asymmetry of propeller aircraft. Class 62, No. 182528

SOURCE: Izobreteniya, promyshlennyye obraztsy, tovarnyye znaki, no. 11, 1966, 140

TOPIC TAGS: aerodynamic control, gas turbine engine, aircraft auxiliary engine, asymmetric body

ABSTRACT: An Author Certificate has been issued for a method of compensating for the aerodynamic asymmetry of propeller aircraft. For the purpose of increasing flight safety and simplifying flying technique, aerodynamic asymmetry is decreased by the thrust of an auxiliary gas-turbine engine (1). This creates a moment opposite

Card 1/2 UDC: 629.135/138

"APPROVED FOR RELEASE: Thursday, September 26, 2002 CIA-RDP86-00513R001446510003-7
APPROVED FOR RELEASE: Thursday, September 26, 2002 CIA-RDP86-00513R001446510003-7"

ACC NR: AP6021489

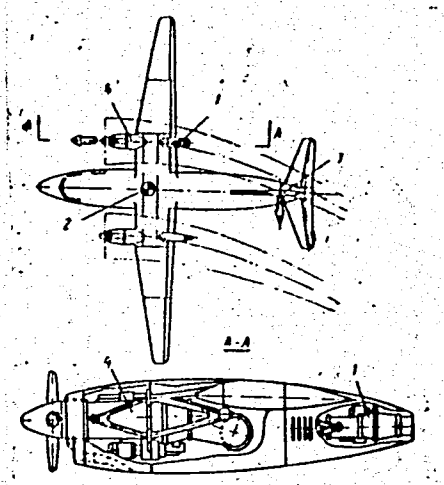

Fig. 1. Compensating for aerodynamic asymmetry

1 - Auxiliary gas-turbine engine; 2 - center of gravity; 3 - vertical tail surfaces; 4 - main power plant

to the moment indicated (see Fig. 1), which is caused by an asymmetric blast on the vertical tail (3) surfaces by the airflow from the main power plant (4). Orig. art. has: 1 figure. [WS]

SUB CODE: 01, 21/ SUBM DATE: 13Oct65/ ATD PRESS: 5042

Card 2/2

"APPROVED FOR RELEASE: Thursday, September 26, 2002 CIA-RDP86-00513R001446510003-7
APPROVED FOR RELEASE: Thursday, September 26, 2002 CIA-RDP86-00513R001446510003-7"

N/5
644.67
.R9

RYSHIKH, A N

Panaritsiy I Ego Lecheniye Na Osnove Metodov A. V. Vishnevskogo. Izd. 2, Perer. i Dop. (Panaritium and Its Therapy on the Basis of A. V. Vishnevskii's Methods) Moskva, Medgiz, 1953.

161 p. Illus.

"APPROVED FOR RELEASE: Thursday, September 26, 2002 CIA-RDP86-00513R001446510003-7
APPROVED FOR RELEASE: Thursday, September 26, 2002 CIA-RDP86-00513R001446510003-7"

RYSHIKOV, K. M.; SUDARIKOV, V. Ye.

Baikal, Lake - Parasites

Work of the 272nd Union Helminthological Expedition of 1949 in the Lake Baikal region. K. M. Ryshikov, V. Ye. Sudarikov. Trudy Gel'm. Lab. No. 5, 1951

Monthly List of Russian Accessions, Library of Congress , September 1952 Unclassified

"APPROVED FOR RELEASE: Thursday, September 26, 2002 CIA-RDP86-00513R001446510003-7
APPROVED FOR RELEASE: Thursday, September 26, 2002 CIA-RDP86-00513R001446510003-7"

POD'YAPOL'SKAYA, V. P.; SPASSKIY, A. A.; RYSHIKOV, K. M.

Pechora Valley - Parasites

Work of the 265th Union Helminthological Expedition of 1947 in the region of the Pechora River of Komi A. S. S. R. Trudy Gel'm. lab. no. 5, 1951.

Monthly List of Russian Accessions, Library of Congress, September 1952. UNCLASSIFIED.

"APPROVED FOR RELEASE: Thursday, September 26, 2002 CIA-RDP86-00513R001446510003-7
APPROVED FOR RELEASE: Thursday, September 26, 2002 CIA-RDP86-00513R001446510003-7"

RYSHKA, F.

USSR/Organic Chemistry - Synthetic Organic Chemistry, E-2

Abst Journal: Referat Zhur - Khimiya, No 19, 1956, 61499

Author: Ryshka, F.

Institution: None

Title: Synthesis of N-3-chlorophenylphthalamic Acid

Original Periodical: Sb. stud. nauch.-issled. rabot, Mosk. s.-kh. akad. im. K. A. Timiryazeva, 1956, No 6, 88-92

Abstract: There was synthesized 3-$ClC_6H_4NHCOC_6H_4COOH$-2 (I) to study its properties as plant growth regulator. Chlorination of dry $C_6H_5NO_2$ in presence of freshly prepared $FeCl_3$ gives m-chloronitrobenzene (II) with yield of 50%, MP 44.4° (from alcohol or CH_3COOH). II is reduced with Zn + HCl to m-chloronitro-aniline (III), yield 90%, BP 228-230°. On interaction of III and phthalic anhydride in acetone or $CHCl_3$ I is formed with yield of 98%, MP 166°. It is shown that I at low concentration enhances growth of roots in wheat.

Card 1/1

"APPROVED FOR RELEASE: Thursday, September 26, 2002 CIA-RDP86-00513R001446510003-7
APPROVED FOR RELEASE: Thursday, September 26, 2002 CIA-RDP86-00513R001446510003-7"

RYSHKA, F.Yu.; KHOKHLOV, A.S.

Gel filtration of pituitary hormones. Izv. AN SSSR. Ser. biol. 31 no.1:129-134 Ja-F '66. (MIRA 19:1)

1. Institut khimii prirodnykh soyedineniy AN SSSR, Moskva.
Submitted October 4, 1965.

"APPROVED FOR RELEASE: Thursday, September 26, 2002 CIA-RDP86-00513R001446510003-7
APPROVED FOR RELEASE: Thursday, September 26, 2002 CIA-RDP86-00513R001446510003-7"

L 37742-66

ACC NR: AP6028236 SOURCE CODE: UR/0216/66/000/001/0129/0134

AUTHOR: Ryshka, F. Yu.; Khokhlov, A. S. 31 B

ORG: Institute of Chemistry of Naturally Occurring Compounds, AN SSSR, Moscow (Institut khimii prirodnykh soyedineniy AN SSSR)

TITLE: Gel filtration of hormones of the hypophysis 22

SOURCE: AN SSSR. Izvestiya. Seriya biologicheskaya, no. 1, 1966, 129-134

TOPIC TAGS: hormone, gel, rabbit, filtration, ACTH, vasopressin, biochemistry

ABSTRACT: Separation and isolation of hormones of the hypophysis by the method of gel filtration, which is described in the literature, was studied. Gel filtration was carried out in columns containing G-25, G-50, and G-100 sephadex gels. Solutions in 0.1-0.2 N acetic acid were filtered and the same solvent was used in elution. The Rf values and elution volumes for oxytocin, vasopressin, alpha-melanostimulating hormone, beta-melanostimulating hormone, ACTH, prolactin, thyreostimulating hormone, follicle-stimulating hormone, the hormone stimulating interstitial cells, somatotropic vasopressin, and lipotropin on the three types of sephadex were determined. The lipolytic activity of hormones was tested in vitro and in biological tests on rabbits. It was confirmed that in addition to the previously known hypophyseol hormones lipotropin, a hormone that had been isolated by the authors (cf. Biokhimiya, vol. 30, p. 1,277) was also present. The polypeptide lipotropin, which had a molecular

Card 1/2 UDC: 577.17

"APPROVED FOR RELEASE: Thursday, September 26, 2002 CIA-RDP86-00513R001446510003-7
APPROVED FOR RELEASE: Thursday, September 26, 2002 CIA-RDP86-00513R001446510003-7"

ACC NR: AP6028236

weight distinctly different from those of ACTH, melanostimulating hormone, and vasopressin, also exhibited the strong lipolytic action on the fat tissue guinea pigs in vitro that is characteristic of these three hormones. Orig. art. has: 6 figures and 1 table. [JPRS: 36,932]

SUB CODE: 06 / SUBM DATE: 04Oct65 / ORIG REF: 002 / OTH REF: 017

"APPROVED FOR RELEASE: Thursday, September 26, 2002 CIA-RDP86-00513R001446510003-7
APPROVED FOR RELEASE: Thursday, September 26, 2002 CIA-RDP86-00513R001446510003-7"

VETLUGINA, L.A.; MOROZOVA, G.R.; BALITSKAYA, A.K.; RYSHKA, F.Yu.; KHOKHLOV, A.S.

Separation of the antibiotic coelicomycin by gel filtration on sephadex. Antibiotiki 9 no.9:778-783 S '64. (MIRA 19:1)

1. Institut mikrobiologii i virusologii AN Kazakhskoy SSR i Institut khimii prirodnykh soyedineniy AN SSSR, Moskva.

"APPROVED FOR RELEASE: Thursday, September 26, 2002 CIA-RDP86-00513R001446510003-7
APPROVED FOR RELEASE: Thursday, September 26, 2002 CIA-RDP86-00513R001446510003-7"

RYSHKA, F.Yu.; KHOKHLOV, A.S.

Purification and study of lipotropic substance from the hypophyses of various animal species. Biokhimiia 30 no.6: 1277-1284 N-D '65. (MIRA 19:1)

1. Institut khimii prirodnykh soyedineniy AN SSSR, Moskva.
Submitted June 18, 1965.

RYSHKE
APPROVED FOR RELEASE: Thursday, September 26, 2002 CIA-RDP86-00513R001446510003-7
APPROVED FOR RELEASE: Thursday, September 26, 2002 CIA-RDP86-00513R001446510003-7"

RUMANIA / Chemical Technology. Control Devices & Automatic Regulation. H

Abs Jour: Ref Zhur-Khimiya, No 12, 1958, 39935.

Author : Kantuniari, Ryshke, Badya.
Inst : Not given.
Title : The Problems of Automatization of Continuous Motion; in Distillation Setups.

Orig Pub: Rev. Chim., 1957, No 8, 528-534.

Abstract: Various constructions for automatization of distillation assemblies is described; a catalog of applied equipment is given.

Card 1/1

"APPROVED FOR RELEASE: Thursday, September 26, 2002 CIA-RDP86-00513R001446510003-7
APPROVED FOR RELEASE: Thursday, September 26, 2002 CIA-RDP86-00513R001446510003-7"

RYSHKEVICH, V.

The workers' committee in the struggle for the consolidation of the state farm economy. Sov. profsoiuzy 17 no.6:26-28 Mr '61. (MIRA 14:3)

1. Predsedatel' rabochkoma sovkhoza "Volkovyskiy," Grodnenskoy oblasti, BSSR.

(Grodno Province—Trade unions)
(State farms)

"APPROVED FOR RELEASE: Thursday, September 26, 2002 CIA-RDP86-00513R001446510003-7
APPROVED FOR RELEASE: Thursday, September 26, 2002 CIA-RDP86-00513R001446510003-7"

NAUMOV, A.N.; RYSKIN, G.Ya.

Isotopic effect of diffusion of lithium in sodium. Fiz. tver. tela 7 no.3:695-696 Mr '65. (MIRA 18:4)

1. Fiziko-tekhnicheskiy institut imeni Ioffe AN SSSR, Leningrad.

"APPROVED FOR RELEASE: Thursday, September 26, 2002 CIA-RDP86-00513R001446510003-7
APPROVED FOR RELEASE: Thursday, September 26, 2002 CIA-RDP86-00513R001446510003-7"

GUSAROV, N.; RYSHKIN, I.

Indifferent to urgent tasks. Sov.profsoiuzy 4 no.6:43-44 Je '56.
(MLRA 9:8)

(Al'met'yevsk--Community centers)

"APPROVED FOR RELEASE: Thursday, September 26, 2002 CIA-RDP86-00513R001446510003-7
APPROVED FOR RELEASE: Thursday, September 26, 2002 CIA-RDP86-00513R001446510003-7"

RYSHKIN, V.S.

Heart massage as a method of controlling air embolism in the coronary vessels. Khirurgiia no.9:58-62 '62. (MIRA 15:10)

1. Iz kafedry gospital'noy khirurgii (zav. - deystvitel'nyy chlen AMN SSSR prof. B.V.Petrovskiy) Moskovskogo ordena Lenina meditsinskogo instituta imeni I.M.Sechenova.
(HEART--SURGERY) (EMBOLISM)

"APPROVED FOR RELEASE: Thursday, September 26, 2002 CIA-RDP86-00513R001446510003-7
APPROVED FOR RELEASE: Thursday, September 26, 2002 CIA-RDP86-00513R001446510003-7"

RYSHKIN, V. S.; KHODAS, M. Ya.

Change in the tension of oxygen in the cerebral cortex and myocardium of the left ventricle during heart massage. Eksper. khir. no.3:11-15 '62. (MIRA 15:7)

1. Iz gospital'noy khirurgicheskoy kliniki (dir. - deystvitel'nyy chlen AMN SSSR prof. B. V. Petrovskiy) I Moskovskogo meditsinskogo instituta.

(CARDIAC RESUSCITATION) (OXYGEN IN THE BODY)
(CEREBRAL CORTEX) (HEART—MUSCLE)

"APPROVED FOR RELEASE: Thursday, September 26, 2002 CIA-RDP86-00513R001446510003-7
APPROVED FOR RELEASE: Thursday, September 26, 2002 CIA-RDP86-00513R001446510003-7"

PETROVSKIY, B.V., laureat Leninskoy premii, prof.; RYSHKIN, V.S.

Heart massage. Sov.med. 25 no.6:3-7 Je '61. (MIRA 15:1)

1. Iz kafedry gospital'noy khirurgii (zav. - deystvitel'nyy chlen AMN SSSR prof. B.V.Petrovskiy) I Moskovskogo ordena Lenina meditsinskogo instituta imeni I.M.Sechenova.
(RESUSCITATION)

"APPROVED FOR RELEASE: Thursday, September 26, 2002 CIA-RDP86-00513R001446510003-7
APPROVED FOR RELEASE: Thursday, September 26, 2002 CIA-RDP86-00513R001446510003-7"

PETROVSKIY, B.V.; SOLOV'YEV, G.M.; SHUMAKOV, V.I.; BUNYATYAN, A.A.; KHODAS, M.Ya.; SHABALKIN, B.V.; RYSHKIN, V.S.; PYATNITSKAYA, G.Kh.

Results of work with the apparatus of artificial blood circulation of the Craford-Senning system. Trudy 1-go MMI 33:9-14 '64.
(MIRA 18:3)

"APPROVED FOR RELEASE: Thursday, September 26, 2002 CIA-RDP86-00513R001446510003-7
APPROVED FOR RELEASE: Thursday, September 26, 2002 CIA-RDP86-00513R001446510003-7"

RYSHKINA, T.A., assistant.; RADUSHEV, V.I., assistant.

Composition of precipitates settling in the distiller during soda ash production. Nauch. trudy NPI 26:276-281 '55. (MLRA 9:12)
(Soda industry)

"APPROVED FOR RELEASE: Thursday, September 26, 2002 CIA-RDP86-00513R001446510003-7
APPROVED FOR RELEASE: Thursday, September 26, 2002 CIA-RDP86-00513R001446510003-7"

KOVALENKO, Ye.V.; LYUTSEDARSKIY, V.A.; RYSHKINA, T.A.

Investigating semiconductor thermal resistors based on Cu_xO-Mn_3O_4. Zhur.prikl.khim. 34 no.8:1880-1883 Ag '61. (MIRA 14:8)

(Thermistors)
(Copper oxide)
(Manganese oxide)

"APPROVED FOR RELEASE: Thursday, September 26, 2002 CIA-RDP86-00513R001446510003-7
APPROVED FOR RELEASE: Thursday, September 26, 2002 CIA-RDP86-00513R001446510003-7"

15 2670
24.7600

25232
S/080/61/034/008/016/018
D204/D305

AUTHORS: Kovalenko, E.V., Lyutsedarskiy, V.A. and Ryshkina, T.A.

TITLE: Investigating semiconductor thermoresistances with a Cu_2O - Mn_3O_4 base

PERIODICAL: Zhurnal prikladnoy khimii, v. 34, no. 8, 1961, 1880-1883

TEXT. The purpose of this investigation was to establish the phase composition of the roasted cupro-manganese mixture used in thermoresistances. The authors prepared Mn_3O_4 by prolonged heating of Mn_2O_3 at 950 - 1000°, the correspondence of the obtained compound to the formula and the absence of other oxide phases being verified by a method of X-ray analysis: RKD cell, URS-55 equipment with an iron anticathode and a 6 hour exposure at 27 kV and 15 mA, type "PT" film, specimen diameter 0.7 mm. The interplane distances d are calculated by correcting for the diameter of the specimen, and the intensity I is estimated by eye according to the 5-mark scale. Com-

Card 1/4

"APPROVED FOR RELEASE: Thursday, September 26, 2002 CIA-RDP86-00513R001446510003-7
APPROVED FOR RELEASE: Thursday, September 26, 2002 CIA-RDP86-00513R001446510003-7"

S/080/61/034/008/016/018
D204/D505

Investigating semiconductor

parison of the interplane distances and line intensities of the studied sample with the standard values given by V. Nikheyev (Ref. 5 Rentgenometricheskiy opredelitel' mineralov (X-ray Detector of Minerals, Gosgeoltekhizdat, Moscow, 1957) and A. Kitaygorodskiy (Ref. 6 Rentgenostrukturnyy analiz melkokristallicheskikh i amorfnykh tel (Roentgeno-structural Analysis of Finely Crystalline and Amorphous Bodies, Gostekhizdat, Moscow and Leningrad, 1952) and others indicates that the prepared compound completely corresponds to Mn_3O_4. The value of the magnetic susceptibility of the studied specimen also closely agrees with that cited in published handbooks. As regards cuprous oxide, B. Gulida (Ref. 9: Tr. Tomskogo Gos. Univ. im. Kuybysheva, 145, 148, 1957) notes the instability of the CuO - Cu_2O equilibrium on heating. According to Ormont, cuprous ions occur in tetrahedral positions, the coordination of the cupric ions being almost tetragonal. In order to ascertain the changes in the phase composition of a cupro-manganese mixture with variation in temperature, X-ray analyses were made of specimens with the composition 66% Cu_2O - 34% Mn_3O_4 that were heated to a constant weight at temperatures of 400, 500, 600, 700, 800 and 900°. The experimental

"APPROVED FOR RELEASE: Thursday, September 26, 2002 CIA-RDP86-00513R001446510003-7
APPROVED FOR RELEASE: Thursday, September 26, 2002 CIA-RDP86-00513R001446510003-7"

Investigating semiconductor...

results suggest the existence of two phases: $CuMn_2O_4$ and CuO. The relative content of these phases varies with temperature; CuO shows a minimum at 500° and then smoothly increases to reach a maximum at 900°. The appearance of CuO may be connected with the oxidation of Cu_2O. The increase in the weight of samples on heating, which proceeds at the expense of the Cu_2O oxidation reaction, would seem to confirm this phenomenon. This increase in the relative concentration of CuO may be due to the greater rate of diffusion of oxygen ions into Cu_2O in comparison with that of copper ions into Mn_3O_4. The most probable form for the reaction taking place during sintering is: $12\ Cu_2O + 4\ Mn_3O_4 + 7\ O_2 = 6\ CuMn_2O_4 + 18\ CuO$. Thus, CuO and a solid solution of Mn_3O_4 in $CuMn_2O_4$ will be present as a result of interaction in the specimens brought to constant weight. The authors assert that this last conclusion agrees with the observations of Rode regarding the formation by manganese of a number of oxygen compounds with a variable composition, a phenomenon also noted by B. Kolomiyets (Ref. 11: Zhurnal tekhnicheskoy fiziki, 27, 1, 51, 1957) and Ye. V. Kurlina et al (Ref. 12: Dokl. Akad. Nauk

"APPROVED FOR RELEASE: Thursday, September 26, 2002 CIA-RDP86-00513R001446510003-7
APPROVED FOR RELEASE: Thursday, September 26, 2002 CIA-RDP86-00513R001446510003-7"

S/080/61/034/008/016/018
D204/D305

Investigating semiconductor...

SSSR, 86, 2, 305, 1952) when studying reciprocal solid solutions between spinels in the system CuO - Mn_3O_4 - O_2. There are 3 figures, 1 table and 12 references: 8 Soviet-bloc and 4 non-Soviet-bloc. The references to the English-language publications read as follows: K. Sinha and A. Sinha, J. Phys. Chem., 61, 6, 758, 1957; Cumulative Alphabetical and grouped numerical index of X-ray diffraction data. American society for testing materials. 1916 Race Street, Philadelphia 3 Pa (1953); Handbook of Chemistry and Physics, 37th edition, 2, Cleveland, 1955-1956; K. Sinha et al. J. Phys. Chem., 62, 2, 1958.

SUBMITTED: May 6, 1960

"APPROVED FOR RELEASE: Thursday, September 26, 2002 CIA-RDP86-00513R001446510003-7
APPROVED FOR RELEASE: Thursday, September 26, 2002 CIA-RDP86-00513R001446510003-7"

Age changes in the permeability of the lens capsule. Vop. klin. i eksp. oft. no.2:67-79 '59. (MIRA 14:11)

(CRYSTALLINE LENS)

"APPROVED FOR RELEASE: Thursday, September 26, 2002 CIA-RDP86-00513R001446510003-7
APPROVED FOR RELEASE: Thursday, September 26, 2002 CIA-RDP86-00513R001446510003-7"

RYSHKOV, I., komandir podrazdeleniya, Geroy Sovetskogo Soyuza

A difficult test. Grazhd.av. 20 no.7:15 Jl '63. (MIRA 16:9)
(Airplanes--Landing)

RYSHKOV, "APPROVED FOR RELEASE: Thursday, September 26, 2002 CIA-RDP86-00513R001446510003-7
APPROVED FOR RELEASE: Thursday, September 26, 2002 CIA-RDP86-00513R001446510003-7"

I.G. RYSHKOV author of "Combination dusting of the seed of winter grain with granosan and benzene hexachloride - a reserve to increase productivity", pub in Zemledelie, Vol 3, No. 7, July 1955.
(Full translation of article, Trans No. A-738, is on Microfilm No. 9006532)

Author discusses work done by Stavropol State Selection Station in 1950-1954 in dusting seed with a combination of granosan and benzene hexachloride in order to protect crops against pests and diseases. Author states that experiments have demonstrated that this dusting disinfects the seed of winter wheat and barley against stinking smut, covered smut, Fusarium and other fungus diseases. Dusted seed are not attacked by false wireworms or wireworms. Author goes on to describe process of dusting, and gives statistical information on increase of production.

"APPROVED FOR RELEASE: Thursday, September 26, 2002 CIA-RDP86-00513R001446510003-7
APPROVED FOR RELEASE: Thursday, September 26, 2002 CIA-RDP86-00513R001446510003-7"

FILIPPOV, S.N. [deceased]; BEDA, N.I.; KRASOVSKIY, L.V.; RYSHKOV, P.Ya.; MASHKOVA, A.K.

Rails made of basic converter steel (with upper oxygen blast). Biul. TSNIIGHM no.22:51-52 '57. (MIRA 11:5)
(Railroads--Rails)

"APPROVED FOR RELEASE: Thursday, September 26, 2002 CIA-RDP86-00513R001446510003-7
APPROVED FOR RELEASE: Thursday, September 26, 2002 CIA-RDP86-00513R001446510003-7"

RYSHKOV, S.S.

One mapping of a Hilbert space upon itself. Dokl. AN SSSR 141 no.5:1042-1044 D '61. (MIRA 14:12)

1. Matematicheskiy institut im. V.A. Steklova AN SSSR. Predstavleno akademikom P.S. Aleksandrovym.
(Hilbert space) (Conformal mapping)

"APPROVED FOR RELEASE: Thursday, September 26, 2002 CIA-RDP86-00513R001446510003-7
APPROVED FOR RELEASE: Thursday, September 26, 2002 CIA-RDP86-00513R001446510003-7"

GOLDOVSKIY, Ye.M.; RYSHKOV, S.S.

Effect of the shape and position of the motion-picture screen on the uniformity of its illumination. Zhur.nauch.i prikl.fot.i kin. 7 no.1:48-56 Ja-F '62. (MIRA 15:3)

1. Vsesoyuznyy gosudarstvennyy institut konematografii (VGIK).
(Motion-picture screens)

"APPROVED FOR RELEASE: Thursday, September 26, 2002 CIA-RDP86-00513R001446510003-7
APPROVED FOR RELEASE: Thursday, September 26, 2002 CIA-RDP86-00513R001446510003-7"

RYSHKOV, S.S.

Structure of an n-dimensional parallelohedron of the first type.
Dokl. AN SSSR 146 no.5:1027-1030 O '62. (MIRA 15:10)

1. Matematicheskiy institut im. V.A.Steklova AN SSSR.
Predstavleno akadmikom I.M.Vinogradovym.
(Polyhedra)

"APPROVED FOR RELEASE: Thursday, September 26, 2002 CIA-RDP86-00513R001446510003-7
APPROVED FOR RELEASE: Thursday, September 26, 2002 CIA-RDP86-00513R001446510003-7"

DELONE, B.N.; RYSHKOV, S.S.

Solution of the problem of the loosest latticed covering for a four-dimensional space by identical spheres. Dokl. AN SSSR 152 no.3:523-524 S '63. (MIRA 16:12)

1. Matematicheskiy institut im. V.A.Steklova AN SSSR. 2. Chlen-korrespondent AN SSSR (for Delone).

"APPROVED FOR RELEASE: Thursday, September 26, 2002 CIA-RDP86-00513R001446510003-7
APPROVED FOR RELEASE: Thursday, September 26, 2002 CIA-RDP86-00513R001446510003-7"

DELONE, B.N.; SANDAKOVA, N.N.; RYSHKOV, S.S.

Optimal cubature lattice for functions of two variables that are smooth on all sides. Dokl. AN SSSR 162 no.6:1230-1233 Je '65. (MIRA 18:7)

1. Chlen-korrespondent AN SSSR (for Delone).

"APPROVED FOR RELEASE: Thursday, September 26, 2002 CIA-RDP86-00513R001446510003-7
APPROVED FOR RELEASE: Thursday, September 26, 2002 CIA-RDP86-00513R001446510003-7"

RYSHKOV, S.S.

Some remarks on various types of n-dimensional parallelohedra and the density of lattice coverings of E^n space by equal spheres. Dokl. AN SSSR 162 no.2:277-280 My '65. (MIRA 18:5)

1. Matematicheskiy institut im. V.A.Steklova AN SSSR. Submitted November 30, 1964.

"APPROVED FOR RELEASE: Thursday, September 26, 2002 CIA-RDP86-00513R001446510003-7
APPROVED FOR RELEASE: Thursday, September 26, 2002 CIA-RDP86-00513R001446510003-7"

RYSHKOV, S.S. Cand Phys-Math Sci -- (diss) "The combiner topology of gilbert ~~areas~~ spaces." Mos, 1957. 7 pp (Mos State Univ im M. V. Lomonosov. Mechanical-Math Faculty), 100 copies (KL, 44-57, 99)

"APPROVED FOR RELEASE: Thursday, September 26, 2002 CIA-RDP86-00513R001446510003-7
APPROVED FOR RELEASE: Thursday, September 26, 2002 CIA-RDP86-00513R001446510003-7"

GOLDOVSKIY, Ye.M.; RYSHKOV, S.S.

Motion-picture image distortion by lenses under vertical and horizontal angles of projection. Zhur.nauch.i prikl.fot. i kin. 5 no.6:439-445 N-D '60. (MIRA 14:1)

1. Vsesoyuznyy nauchno-issledovatel'skiy kinofotoinsitut.
(Motion-picture projection)

"APPROVED FOR RELEASE: Thursday, September 26, 2002 CIA-RDP86-00513R001446510003-7
APPROVED FOR RELEASE: Thursday, September 26, 2002 CIA-RDP86-00513R001446510003-7"

Ryshkov, S.S.

16(1) PHASE I BOOK EXPLOITATION SOV/2660

Vsesoyuznyy matematicheskiy s"yezd. 3rd, Moscow, 1956

Trudy, t. 4: Krat'koye soderzhaniye sektsionnykh dokladov. Doklady inostrannykh uchenykh (Transactions of the 3rd All-Union Mathematical Conference in Moscow, vol. 4, Summary of Sectional Reports. Reports of Foreign Scientists) Moscow, Izd-vo AN SSSR, 1959. 247 p. 2,200 copies printed.

Sponsoring Agency: Akademiya nauk SSSR. Matematicheskiy institut.

Tech. Ed.: G.M. Shevchenko; Editorial Board: A.A. Abramov, V.G. Boltyanskiy, A.M. Vasil'yev, B.V. Medvedev, A.D. Myshkis, S.M. Nikol'skiy (Resp. Ed.), A.G. Postnikov, Yu. V. Prokhorov, K.A. Rybnikov, P. L. Ul'yanov, V.A. Uspenskiy, N.G. Chetayev, G. Ye. Shilov, and A.I. Shirshov.

PURPOSE: This book is intended for mathematicians and physicists.

COVERAGE: The book is Volume IV of the Transactions of the Third All-Union Mathematical Conference, held in June and July 1956. The book is divided into two main parts. The first part contains summaries of the papers presented by Soviet scientists at the Conference that were not included in the first two volumes. The second part contains the text of reports submitted to the editor by non-Soviet scientists. In those cases when the non-Soviet scientist did not submit a copy of his paper to the editor, the title of the paper is cited and, if the paper was printed in a previous volume, reference is made to the appropriate volume. The papers, both Soviet and non-Soviet, cover various topics in number theory, algebra, differential and integral equations, function theory, functional analysis, probability theory, topology, mathematical problems of mechanics and physics, computational mathematics, mathematical logic and the foundations of mathematics, and the history of mathematics.

Ryshkov, S.S. (Moscow). The invariance of infinite dimensional theory groups 73

Section on Geometry

Bumsla, G.I. (L'vov). On certain problems of geometrography connected with accuracy of graphic computations 75

Gordevskiy, D.Z. (Khar'kov). Incidence axioms of multidimensional projective geometry 75

Dorfman, A.G. (Stalingrad). Certain problems of local deformability of surfaces 76

Karapetyan, S.Ye. (Yerevan). Linear complexes of developing surfaces of a congruence 76

Lopshits, A.M. (Moscow). Fundamentals theorem of the theory of a hypersurface in dimensionless Euclidean space 77

Card 15/ 34

"APPROVED FOR RELEASE: Thursday, September 26, 2002 CIA-RDP86-00513R001446510003-7
APPROVED FOR RELEASE: Thursday, September 26, 2002 CIA-RDP86-00513R001446510003-7"

16(1)

AUTHOR: Ryshkov,S.S.

SOV/20-127-2-10/70

TITLE: On k-Regular Imbeddings

PERIODICAL: Doklady Akademii nauk SSSR,1959,Vol 127,Nr 2,pp 272-273 (USSR)

ABSTRACT: The subset A of the Euclidean E^N is called k-regular if no k+2 points of A lie in a k-dimensional plane. The homeomorphic mapping $f: F \to E^N$ of the compactum F into the space E^N is called a k-regular imbedding if the set $f(F)$ is a k-regular subset of E^N. A point x belonging to an n-dimensional compactum is called a point of dimensional full-valuedness if to every neighborhood Ox of x there exists an n-dimensional dimensionally full-valued (compare V.G.Boltyanskiy [Ref 4]) compactum Φ which is contained in Ox.

Theorem: Let the compactum F have the dimension n and have $\left[\frac{k+1}{2}\right]$ points of dimensional full-valuedness. If F is k-regularly imbedded into E^N, then

$$N \geqslant \left[\frac{k+1}{2}\right] n + \left[\frac{k}{2}\right].$$

Card 1/2

"APPROVED FOR RELEASE: Thursday, September 26, 2002 CIA-RDP86-00513R001446510003-7
APPROVED FOR RELEASE: Thursday, September 26, 2002 CIA-RDP86-00513R001446510003-7"

On k-Regular Imbeddings

SOV/20-127-2-10/70

By the estimation the hypothesis N = 2n + k of K.Borsuk [Ref 1,2] is refuted.
There are 4 references, 3 of which are Soviet, and 1 Polish.

ASSOCIATION: Moskovskiy tekstil'nyy institut (Moscow Textile Institute)

PRESENTED: April 2, 1959, by P.S.Aleksandrov, Academician

SUBMITTED: April 2, 1959

Card 2/2

APPROVED FOR RELEASE: Thursday, September 26, 2002 CIA-RDP86-00513R001446510003-7
APPROVED FOR RELEASE: Thursday, September 26, 2002 CIA-RDP86-00513R001446510003-7

L 26777-66 EWT(d) IJP(c)

ACC NR: AP6017469 SOURCE CODE: UR/0020/65/162/006/1230/1233

18
B

AUTHOR: Delone, B.N. (Corresponding member AN SSSR); Sandakova, N. N.; Ryshkov, S. S.

ORG: none

TITLE: Optimal cubature lattice for completely smooth functions of two variables

SOURCE: AN SSSR. Doklady, v. 162, no. 6, 1965, 1230-1233

TOPIC TAGS: differential calculus, mathematic transformation, hodograph

ABSTRACT: The following theorem is proved: The lattice Γ_1^2, constructed on a right triangle, is a two-dimensional optimum lattice for any $m \geq 2$. Methods of differential calculus as well as two previously developed lemmas, are used for the proof: 1) The sum $\Sigma 1/r^{2m}$, for $m \geq 2$, for any vertex of a right triangle centered on point 0 is minimum with respect to all triangles obtained from it by equi-affine transformation, differing little from the initial triangle and leaving point 0 in place. 2) Let there be an n-dimensional lattice Γ having minimum distances a between its points. If, for its equi-affine lattice Γ', the minimum a' is sufficiently small ($a' \lambda a$, where λ is less than some $\lambda_0 < 1$) then $S_{m,\Gamma'} S_{m,\Gamma}$. The constant λ_0 is

2

Card 1/2

"APPROVED FOR RELEASE: Thursday, September 26, 2002 CIA-RDP86-00513R001446510003-7
APPROVED FOR RELEASE: Thursday, September 26, 2002 CIA-RDP86-00513R001446510003-7"

L 26777-66

ACC NR: AP6017469

analyzed in detail. Finally, a hodograph is shown for hyperbolic rotations for which the component introduced by the equi-affine representation of a right triangle centered at point O and a unit leg is equal to the component introduced by the triangle itself. Orig. art. has: 2 figures, 1 formula. [JPRS]

SUB CODE: 12 / SUBM DATE: 19Mar65

Card 2/2

"APPROVED FOR RELEASE: Thursday, September 26, 2002 CIA-RDP86-00513R001446510003-7
APPROVED FOR RELEASE: Thursday, September 26, 2002 CIA-RDP86-00513R001446510003-7"

RYSHKOV, S.S.

On V. A. Borovikov's article "One topological problem connected with certain issues of quantum electrodynamics." Usp.mat.nauk 15 no.3:240 My-Je '60. (MIRA 13:10)

(Topology) (Quantum electrodynamics)

(Borovikov, V.A.)

"APPROVED FOR RELEASE: Thursday, September 26, 2002 CIA-RDP86-00513R001446510003-7
APPROVED FOR RELEASE: Thursday, September 26, 2002 CIA-RDP86-00513R001446510003-7"

RYSHKOV, S.S.

On a class of continuous mappings of some ∞-dimensional sets. Dokl. AN SSSR 114 no.5:961-963 Je '57. (MLRA 10:9)

1. Moskovskiy gosudarstvennyy universitet im. M.V. Lomonosova. Predstavleno akademikom P.S. Aleksandrovym.
(Aggregates) (Spaces, Generalized)

APPROVED FOR RELEASE: Thursday, September 26, 2002 CIA-RDP86-00513R001446510003-7
APPROVED FOR RELEASE: Thursday, September 26, 2002 CIA-RDP86-00513R001446510003-7"

RYSHKOV, S.S.

USSR/Mathematics

Card : 1/1

Authors : Ryshkov, S. S.

Title : Performance of a tube generator

Periodical : Dokl. AN SSSR, 96, Ed. 5, 921 - 924

Abstract : Equations used in determining the performance of tube generators are presented. The working conditions of a tube generator with assumed tube characteristics are analyzed. The analysis is strictly theoretical and, as a proof of the results, 3 example-circuits are given. Three references.

Institution : The M. V. Lomonosov State University, Moscow

Presented by : Academician, P. S. Aleksandrov, March 12, 1954

"APPROVED FOR RELEASE: Thursday, September 26, 2002 CIA-RDP86-00513R001446510003-7
APPROVED FOR RELEASE: Thursday, September 26, 2002 CIA-RDP86-00513R001446510003-7"

BOLTYANSKIY, V.G.; RYSHKOV, S.S.; [illegible], Yu.A.

K-regular imbeddings and their application to the theory of approximation of functions. Dep. mat. rank 15 no. 6:125-132 N-D '60. (MIRA 14:2)

(Topology)

APPROVED FOR RELEASE: Thursday, September 26, 2002 CIA-RDP86-00513R001446510003-7
APPROVED FOR RELEASE: Thursday, September 26, 2002 CIA-RDP86-00513R001446510003-7

✓ Ob Odnom Klasse Nepreryvnykh Otobrazhenii Nekoterykh Beskonechnomernykh Mnozhestv, S. S. Ryzhkov, *AN SSSR Dokl.*, June 11, 1957, pp. [illegible]. In Russian. Study of a class of continuous mappings of some ∞-dimensional sets.

3

16 26

Smw

APPROVED FOR RELEASE: Thursday, September 26, 2002 CIA-RDP86-00513R001446510003-7
APPROVED FOR RELEASE: Thursday, September 26, 2002 CIA-RDP86-00513R001446510003-7

RYSHKOV, S. S.

2

✓ K Kombinatornoi Topologii Gil'bertova Prostranstva. S. S. Ryshkov. *AN SSSR*

Dokl., May 21, 1967, pp. 400-402. In Russian. Discussion of the combinational topology of Hilbert space.

16 16

EL

"APPROVED FOR RELEASE: Thursday, September 26, 2002 CIA-RDP86-00513R001446510003-7
APPROVED FOR RELEASE: Thursday, September 26, 2002 CIA-RDP86-00513R001446510003-7"

RYSHKOV, S.S.

On the combinatorial topology of Hilbert space. Dokl. AN SSSR 114 no.3:494-497 My '57. (MLRA 10:8)

1. Moskovskiy gosudarstvennyy universitet im. M.V. Lomonosova. Predstavleno akademikom P.S. Aleksandrovym.
(Topology) (Hilbert space)

"APPROVED FOR RELEASE: Thursday, September 26, 2002 CIA-RDP86-00513R001446510003-7
APPROVED FOR RELEASE: Thursday, September 26, 2002 CIA-RDP86-00513R001446510003-7"

20-114-3-12/60

AUTHOR: Ryshkov, S. S.

TITLE: On the Combinatorial Topology of the Hilbertian Space (K kombinatornoy topologii Gil'bertova prostranstva)

PERIODICAL: Doklady Akademii Nauk SSSR,1957,Vol.114,Nr 3,pp.494-497(USSR)

ABSTRACT: The present report shortly treats the proof of the invariance (at different "cell-divisions") of the group of co-homologies of the infinitely-dimensional sets. The external homologous groups of any closed set F which lie in the Gil'bertian (recte: Hilbertian) space are also determined. Theorem: A certain set P C H may be able to be represented in the form of conclusions of the bodies of the closed subcomplexes K_1 and K_2 of any "cell-divisions" of the Gil'bertian (recte:Hilbertian) space. Then at any r the relation $rH(K_1) \sim {}_rH(K_2)$ applies, where ${}_rH(K)$ signifies the in an earlier paper r-defective group of the homologies of the complex (which was taken over any group of coefficients). Different conceptions are then defined for the proof of this theorem: cell-like representation, cell-like with regard to a pair of cells, degree of the cell-

APPROVED FOR RELEASE: Thursday, September 26, 2002 CIA-RDP86-00513R001446510003-7
APPROVED FOR RELEASE: Thursday, September 26, 2002 CIA-RDP86-00513R001446510003-7"

AUTHOR RYSHKOV, S.S. 20-5-12/60

TITLE On a Class of Continuous Mappings of some ω-dimensional Sets.
(Ob odnom klasse nepreryvnykh otobrazheniy nekotorykh beskonechnomernykh mnozhestv. - Russian)

PERIODICAL Doklady Akademii Nauk SSSR 1957, Vol 114, Nr 5, pp 961-963 (USSR)

ABSTRACT The present paper defines a Λ-class of the images of sunquantities in Hilbert's space H. This class is, apart from other reasons, interesting because in the case of the homeomorphous H-polyhedra contained in this class the ω - dimensional sets of homologies are isomorphous. Any image $\varphi: M \longrightarrow H$, which has the shape $\lambda e + a$, here belongs to class Λ. Here λ denotes a parallel number, a - a continuous image of the quantity $M \subset H$ on a compact e - the identical image. First, definitions for the classes Λ & $\mathfrak{B}$ and Λ are given, the conditions belonging to these definitions are enumerated. The following theorem applies: If the image $\varphi: M \longrightarrow H$ belongs to class Λ such a Base $\mathfrak{B}$ is found for every base $\mathfrak{B}$ that

$$\varphi \in \Lambda_{\mathfrak{B}, \mathfrak{B}}$$ applies.

Several lemmata and examples are given. In conclusion the

CARD 1/2

"APPROVED FOR RELEASE: Thursday, September 26, 2002 CIA-RDP86-00513R001446510003-7
APPROVED FOR RELEASE: Thursday, September 26, 2002 CIA-RDP86-00513R001446510003-7"

20-5-12/60

On a Class of Continuous Mappings of some co- dimensional Sets.

author mentions two invariance theorems and outlines their proofs.
(No Illustrations)

ASSOCIATION: Moscow State University "M.V. LOMONOSOV"
(Moskovskiy gosudarstvennyy universitet M.V. Lomonosova)
PRESENTED BY: P.S. ALEKSANDROV, member of the A cademy, 28.12.1956
SUBMITTED: 26.12.1956
AVAILABLE: Library of Congress

CARD 2/2

"APPROVED FOR RELEASE: Thursday, September 26, 2002 CIA-RDP86-00513R001446510003-7
APPROVED FOR RELEASE: Thursday, September 26, 2002 CIA-RDP86-00513R001446510003-7"

GOLDOVSKIY, Ye.M.; RYSHKOV, S.S.

Objective distortions of the screen image in the case of vertical and horizontal projection angles. Part 3: Curved screens. Zhur. nauch. i prikl. fot.i kin. 6 no.1:53-60 Ja-F '61. (MIRA 14:3)

1. Vsesoyuznyy gosudarstvennyy institut kinematografii (VGIK).
(Motion-picture screens)(Motion-picture projection)

"APPROVED FOR RELEASE: Thursday, September 26, 2002 CIA-RDP86-00513R001446510003-7
APPROVED FOR RELEASE: Thursday, September 26, 2002 CIA-RDP86-00513R001446510003-7"

RYSHKOV, V., polkovnik

Our experience in increasing maneuverability. Voen. vest. 41 no.4:81-84 Ap '62. (MIRA 15:4)
(Artillery, Field and mountain)

APPROVED FOR RELEASE: Thursday, September 26, 2002 | CIA-RDP86-00513R001446510003-7
APPROVED FOR RELEASE: Thursday, September 26, 2002 | CIA-RDP86-00513R001446510003-7

Virus of tobacco mosaic tested for its power of fermentative activity. V. L. Ryshkov and K. S. Sukhov. *Compt. rend. acad. sci. U. R. S. S.* 21, 265–8(1938)(in English).—Tests on the virus of tobacco mosaic showed no effect characteristic of oxidase, peroxidase, catalase, protease, asparaginase, urease, amylase, chlorophyllase or phosphatase even under conditions most conducive to their activity.

A. H. Krappe

"APPROVED FOR RELEASE: Thursday, September 26, 2002 CIA-RDP86-00513R001446510003-7
APPROVED FOR RELEASE: Thursday, September 26, 2002 CIA-RDP86-00513R001446510003-7"

RYSHKOV, V.L.; BESKINA, S.R.

Effect of metabolites and antimetabolites on the reproduction of the tobacco mosaic virus in isolated tomato rootlets. Dokl. AN SSSR 146 no.4:921-924 O '62. (MIRA 15:11)

1. Institut virusologii im. D.I. Ivanovskogo AMN SSSR.
2. Chlen-korrespondent AN SSSR (for Lyzhkov).

(TOBACCO MOZAIC VIRUS)
(TISSUE CULTURE)

APPROVED FOR RELEASE: Thursday, September 26, 2002 | CIA-RDP86-00513R001446510003-7

A new method for the purification of the tobacco mosaic virus. V. L. Ryabkov and E. P. Gromyko. *Compt. rend. acad. sci. U. R. S. S.* **19**, 203-5(1938) (in English).—The leaves and stalks of diseased tobacco or tomato plants were frozen, 328 g. was extd. twice with 250 cc. portions of 0.1 *M* Na_2HPO_4. The ext. was filtered through paper and a soln. of benzoic acid dissolved in $NaHCO_3$ (0.6 g. per g. of benzoic acid) was added at the rate of 1.5-2 g. acid per 100 cc. of ext. After mixing, *N* HCl was added until crystals of benzoic acid appeared. These were filtered off and redissolved in a min. quantity of 0.1 *M* Na_2HPO_4 and the pigments were removed by 2 treatments with activated charcoal. For exts. rich in pigment, 4% and 2% of charcoal were used, for exts. low in pigment, 2% and 1% were sufficient. The virus was then crystd. by Stanley's method (*C. A.* **30**, 5013[3]). Extn. of the benzoic acid and pigments from the aq. soln. with ether were not satisfactory, owing to loss of virus. Salicylic acid might be used instead of benzoic acid. N. McK., Jr.

"APPROVED FOR RELEASE: Thursday, September 26, 2002 CIA-RDP86-00513R001465110003-7
APPROVED FOR RELEASE: Thursday, September 26, 2002 CIA-RDP86-00513R001465110003-7

A new method for the purification of the tobacco mosaic virus. V. L. Ryshkov and E. P. Gremyko. *Compt. rend. acad. sci. U. R. S. S.* 19, 203–5(1938) (in English).—The leaves and stalks of diseased tobacco or tomato plants were frozen, 328 g. was extd. twice with 250 cc. portions of 0.1 *M* Na_2HPO_4. The ext. was filtered through paper and a soln. of benzoic acid dissolved in $NaHCO_3$ (0.6 g. per g. of benzoic acid) was added at the rate of 1.5–2 g. acid per 100 cc. of ext. After mixing, *N* HCl was added until crystals of benzoic acid appeared. These were filtered off and redissolved in a min. quantity of 0.1 *M* Na_2HPO_4 and the pigments were removed by 2 treatments with activated charcoal. For exts. rich in pigment, 4% and 2% of charcoal were used, for exts. low in pigment, 2% and 1% were sufficient. The virus was then crystd. by Stanley's method (*C. A.* 30, 5013[3]). Extn. of the benzoic acid and pigments from the aq. soln. with ether were not satisfactory, owing to loss of virus. Salicylic acid might be used instead of benzoic acid. N. McK., Jr.

"APPROVED FOR RELEASE: Thursday, September 26, 2002 CIA-RDP86-00513R001446510003-7
APPROVED FOR RELEASE: Thursday, September 26, 2002 CIA-RDP86-00513R001446510003-7"

RYSHKOV, V.L.; MARCHENKO, N.K.

Reversible inhibition of multiplication of the tobacco mosaic virus in tobacco leaves. Dokl. AN SSSR 137 no.4:986-988 Ap '61. (MIRA 14:3)

1. Institut virusologii im. D. I. Ivanovskogo AMN SSSR.
(TOBACCO MOASIC VIRUS)
(SULFANILAMIDE)

"APPROVED FOR RELEASE: Thursday, September 26, 2002 CIA-RDP86-00513R001446510003-7
APPROVED FOR RELEASE: Thursday, September 26, 2002 CIA-RDP86-00513R001446510003-7"

CA RYSHKOV V. V. 14

Container for colloidal graphite to be charged into steam boilers for water treatment. V. V. Ryshkov. Russ. 26,303, April 14, 1930.

ASM-SLA METALLURGICAL LITERATURE CLASSIFICATION

"APPROVED FOR RELEASE: Thursday, September 26, 2002 CIA-RDP86-00513R001446510003-7
APPROVED FOR RELEASE: Thursday, September 26, 2002 CIA-RDP86-00513R001446510003-7"

RYSHKOVA, L.K.; US, L.A.

Effect of cancerogenic hydrocarbons on regeneration. Uch.zap. KHGU 51:97-102 '54. (MIRA 11:11)
(Regeneration (Biology)) (Carcinogens) (Urodela)

APPROVED FOR RELEASE: Thursday, September 26, 2002 CIA-RDP86-00513R001446510003-7
APPROVED FOR RELEASE: Thursday, September 26, 2002 CIA-RDP86-00513R001446510003-7"

BERESHEVICH, I.I., kandidat tekhnicheskikh nauk; BOGIN, N.H., kandidat tekhnicheskikh nauk; BYKOV, Ye.I., inzhener; VLASOV, I.I., kandidat tekhnicheskikh nauk; GRITSEVSKIY, M.Ye., inzhener; GRUBER, L.O., inzhener. GURVICH, V.G., inzhener; DAVYDOV, V.N., inzhener; YERSHOV, I.M., kandidat tekhnicheskikh nauk; ZASORIN, S.N., kandidat tekhnicheskikh nauk; IVANOV, I.I., kandidat tekhnicheskikh nauk; KRAUKLIS, A.A., inzhener; KROPOV, L.B., inzhener; LAPIN, V.B., inzhener; LASTOVSKIY, V.P., dotsent; LATUNIN, N.I., inzhener; MARKVARDT, K.G., professor, doktor tekhnicheskikh nauk; MAKHAYLOV, M.I., professor, doktor tekhnicheskikh nauk; NIKANOROV, V.A., inzhener; OSKOLKOV, K.N., inzhener; OKHOSHIN, L.I., inzhener; PARFENOV, K.A., dotsent, kandidat tekhnicheskikh nauk; PERTSOVSKIY, L.M., inzhener; POPOV, I.P., inzhener; PORSHNEV, B.G., inzhener; RATNER, M.P., inzhener; ROSSIYSKIY, G.I., dotsent, kandidat tekhnicheskikh nauk; RYKOV, I.I., kandidat tekhnicheskikh nauk; RYSHKOVSKIY, I.Ya., dotsent, kandidat tekhnicheskikh nauk; RYABKOV, A.Ya., professor [deceased]; TAGER, S.A., kandidat tekhnicheskikh nauk; KHAZEN, M.M., professor, doktor tekhnicheskikh nauk; CHERNYSHEV, M.A., doktor tekhnicheskikh nauk; EDIN, L.Ye., professor, doktor tekhnicheskikh nauk; YUZHNEV, B.N., dotsent; AKSENOV, I.Ya., dotsent, kandidat tekhnicheskikh nauk; ARKHANGEL'SKIY, A.S., inzhener; BARTENEV, P.V., professor, doktor tekhnicheskikh nauk; BERNGARD, K.A., kandidat tekhnicheskikh nauk; BOROVOY, N.Ye., dotsent, kandidat tekhnicheskikh nauk; BOGDANOV, I.A., inzhener; BOGDANOV, N.K., kandidat tekhnicheskikh nauk; VINNICHENKO, N.G., dotsent, kandidat ekonomicheskikh nauk;

(Continued on next card)

"APPROVED FOR RELEASE: Thursday, September 26, 2002 CIA-RDP86-00513R001446510003-7
APPROVED FOR RELEASE: Thursday, September 26, 2002 CIA-RDP86-00513R001446510003-7"

VASIL'YEV, V.F.; GONCHAROV, N.G., inzhener; DERIBAS, A.T., inzhener; DOBROSEL'SKIY, K.M., dotsent, kandidat tekhnicheskikh nauk; DLUGACH, B.A., kandidat tekhnicheskikh nauk; YEFIMOV, G.P., kandidat tekhnicheskikh nauk; ZEMBLINOV, S.V., professor, doktor tekhnicheskikh nauk; ZABELLO, M.L., kandidat tekhnicheskikh nauk; IL'IN, K.P., kandidat tekhnicheskikh nauk; KARETNIKOV, A.D., kandidat tekhnicheskikh nauk; KAPLUN, F.Sh., inzhener; KANSHIN, M.D.; KOCHNEV, P.P., professor, doktor tekhnicheskikh nauk; KOGAN, L.A., kandidat tekhnicheskikh nauk; KUCHURIN, S.F., inzhener; LEVASHOV, A.D., inzhener; MAKSIMOVICH, B.M., dotsent, kandidat tekhnicheskikh nauk; MARTYNOV, M.S., inzhener; MEDKL', O.M., inzhener; NIKITIN, V.D., professor, kandidat tekhnicheskikh nauk; PADNYA, V.A., inzhener; PANTELEYEV, P.I., kandidat tekhnicheskikh nauk; PETROV, A.P., professor, doktor tekhnicheskikh nauk; POVOROZHENKO, V.V., professor, doktor tekhnicheskikh nauk; PISKAREV, I.I., dotsent, kandidat tekhnicheskikh nauk; SERGEYEV, Ye.S., kandidat tekhnicheskikh nauk; SIMONOV, K.S., kandidat tekhnicheskikh nauk; SIMANOVSKIY, M.A., inzhener; SUYAZOV, I.G., inzhener; TAIDAYEV, F.Ya., inzhener; TIKHONOV, K.K., kandidat tekhnicheskikh nauk; USHAKOV, N.Ya., inzhenr; USPENSKIY, V.K., inzhener; FEL'DMAN, E.D., kandidat tekhnicheskikh nauk; FERAPONTOV, G.V., inzhener; KHOKHLOV, L.P., inzhenr; CHERNOMORDIK, G.I., professor, doktor tekhnicheskikh nauk; SHAMAYEV, M.F., inzhener; SHAFIRKIN, B.I., inzhener; YAKUSHIN, S.I., inzhener; GRANOVSKIY, P.G., redaktor; TISHCHENKO, A.I., redaktor; ISAYEV, I.P., dotsent, kandidat tekhnicheskikh nauk, redaktor; KLIMOV, V.F., dotsent kandidat tekhnicheskikh

(Continued on next card)

"APPROVED FOR RELEASE: Thursday, September 26, 2002 CIA-RDP86-00513R001446510003-7
APPROVED FOR RELEASE: Thursday, September 26, 2002 CIA-RDP86-00513R001446510003-7"

BENESHEVICH, I.I.--- (continued) Card 3.

nauk, redaktor; MARKOV, N.V., inzhener, redaktor; KALININ, V.K., inzhener, redaktor; STEPANOV, V.N., professor, redaktor; SIDOROV, N.I., inzhener, redaktor; GERONIMUS, B.Ye., kandidat tekhnicheskikh nauk, redaktor; ROBEL', R.I., otvetstvennyy redaktor

[Technical reference manual for railroad engineers] Tekhnicheskii spravochnik zheleznodorozhnika. Moskva, Gos. transp.zhel-dor. izd-vo. Vol.10. [Electric power supply for railroads] Energosnabzhenie zheleznykh dorog. Otv.red. toma K.G.Markvardt. 1956. 1080 p. Vol.13. [Operation of railroads] Ekspluatatsiia zheleznykh dorog. Otv. red. toma R.I.Robel'. 1956. 739 p. (MLRA 10:2)

1. Chlen-korrespondent Akademii nauk SSSR (for Petrov)
(Electric railroads) (Railroads--Management)

"APPROVED FOR RELEASE: Thursday, September 26, 2002 CIA-RDP86-00513R001446510003-7
APPROVED FOR RELEASE: Thursday, September 26, 2002 CIA-RDP86-00513R001446510003-7"

RYSHKOVSKIY, I. IA.

Ocherednye zadachi elektrifikatsii zheleznykh dorog SSSR. [The next problems of railroad electrification in USSR]. (Sots. transport, 1934, no. 5, p.55-56).
DLC: HE7S6

SO: Soviet Transportation and Communications, A Bibliography, Library of Congress, Reference Department, Washington, 1952, Unclassified,

"APPROVED FOR RELEASE: Thursday, September 26, 2002 CIA-RDP86-00513R001446510003-7
APPROVED FOR RELEASE: Thursday, September 26, 2002 CIA-RDP86-00513R001446510003-7"

RYSHKOVSKIY, I. IA.

Tiagovye podstantsii. [Traction substations]. Dopushcheno v kachestve ucheb. posobiia dlia intov zhel-dor. transporta. Moskva, Gos. transp. zhel-dor. izd-vo, 1949. 347 p. diagrs

DLC: TF863.R9

SO: Soviet Transportation and Communications, A Bibliography, Library of Congress, Reference Department, Washington, 1952, Unclassified.

"APPROVED FOR RELEASE: Thursday, September 26, 2002 CIA-RDP86-00513R001446510003-7
APPROVED FOR RELEASE: Thursday, September 26, 2002 CIA-RDP86-00513R001446510003-7"

RYSHKOVSKIY, I. Ya.

166T13

USSR/Electricity - Demand Factor Sep 50
Repair Shops, Railroad

"Method of Determining the Demand Factor," Docents, I. Ya. Ryshkovskiy, P. F. Matsepon, Dnepropetrovsk Inst of RR Engineers

"Prom Energet" No 9, pp 8-9

Describes mathematical determination of demand factor and details rated capacity and demand factor worked out for motors used in pumps, compressors, presses, lathes, hammers, and cranes of typical railroad car repair plant. Demand factors were calculated for 60-min load maximums.

166T13

APPROVED FOR RELEASE; Thursday, September 26, 2002 CIA-RDP86-00513R001446510003-7
APPROVED FOR RELEASE: Thursday, September 26, 2002 CIA-RDP86-00513R001446510003-7"

RYSHKOVSKIY, I. YA.

AID P - 629

Subject : USSR/Electricity

Card 1/1 Pub. 27 - 33/35

Authors : Volobrinskiy, S. D., Kand. of Tech. Sci., Dotsent and Zvezdkin, M. N., Eng., Leningrad

Title : I. Ya. Ryshkovskiy and K. G. Kuchma: "Traction Substations", 487 pp., 1953 (Bibliography)

Periodical : Elektrichestvo, 8, 94-95, Ag 1954

Abstract : An extensive review of the book with some criticism is presented.

Institution : Leningrad Institute of Engineers of Railroad Transportation

Submitted : No date

"APPROVED FOR RELEASE: Thursday, September 26, 2002 CIA-RDP86-00513R001446510003-7
APPROVED FOR RELEASE: Thursday, September 26, 2002 CIA-RDP86-00513R001446510003-7"

Ryshkovskiy, I. Ya.

AID P - 2018

Subject : USSR/Electricity

Card 1/1 Pub. 27 - 22/31

Authors : Ryshkovskiy, I. Ya., Kand. of Tech. Sci., Dotsent, Kuchma, K. G., Dotsent, and Miroshnichenko, R. I., Kand. of Tech. Sci.

Title : Book Traction Substations (Book Review by S. D. Volobrinskiy and M. N. Zvezdkin, this journal, No.8, 1954) (Discussion)

Periodical : Elektrichestvo, 4, 81-82, Ap 1955

Abstract : The authors of the book disagree with several of the criticisms made by the reviewers of their book. They discuss the main criticisms and present their own point of view.

Institution: Dnepropetrovsk Institute of Engineers of Railway Transportation and Central Scientific Research Institute of the Ministry of Transportation

Submitted : No date

"APPROVED FOR RELEASE: Thursday, September 26, 2002 CIA-RDP86-00513R001446510003-7
APPROVED FOR RELEASE: Thursday, September 26, 2002 CIA-RDP86-00513R001446510003-7"

RYSHKOVSKIY, I.Y., kand. tekhn. nauk, dotsent

Errors of d.c. meters with an electrodynamic system. Izv. vys. ucheb. zav.; energ. 8 no.5:98-101 My '65. (MIRA 18:6)

1. Dnepropetrovskiy institut inzhenerov zheleznodorozhnogo transporta. Predstavlena kafedroy elektrosnabzheniya.

"APPROVED FOR RELEASE: Thursday, September 26, 2002 CIA-RDP86-00513R001446510003-7
APPROVED FOR RELEASE: Thursday, September 26, 2002 CIA-RDP86-00513R001446510003-7"

RYSHKOVSKIY, I.Ya., kand. tekhn. nauk

Unutilized potentials of d.c. systems and the distributive power supply to the overhead contact network. Trudy DIIT no.24:172-197 '54. (MIRA 16:11)