"APPROVED FOR RELEASE: 07/19/2001 CIA-RDP86-00513R001446330001-9

On the frequency dependence S/126/62/014/005/011/015
E073/E020

resonators and toroidal specimens of 16 mm external and 12 mm internal diameter and a height varying from 0.5 mm to a few mm. It is shown that the frequency of spin resonance is displaced to higher values for magnetized samples. The permeability μ'' is lower at 980 Mc/s than at 285 Mc/s and falls off in the presence of a d.c. magnetic field (up to $\pm$ 20 Oe). In addition, there is a marked dependence of resonant frequency on temperature, e.g. 1100 and 650 Mc/s at 20 and 60 °C, respectively. The frequency dependence of μ' and μ'' is investigated for quenched samples in the demagnetized state and when having residual magnetization in circularly and axially magnetized toroids (frequency up to 3 000 Mc/s). Resonant frequencies calculated from this data have values of 540 Mc/s for annealed samples and 180 Mc/s for quenched samples, compared with corresponding observed values of 1100 and 580-640 Mc/s (for different samples). The results are discussed in reasonable detail. It is evident that the permeability in the region of spin resonance is very dependent on the direction of the magnetization vector with respect to the high-frequency field. There are 4 figures and 1 table.

ASSOCIATION: Moskovskiy gosudarstvennyy universitet im. M.V. Lomonosova (Moscow State University imeni M.V.Lomonosov)

SUBMITTED: September 25, 1961

Card 2/2

APPROVED FOR RELEASE: 07/19/2001 CIA-RDP86-00513R001446330001-9"

"APPROVED FOR RELEASE: 07/19/2001 CIA-RDP86-00513R001446330001-9

RYBAK, P.M.

Partial dependence of magnetic permeability of ferrates in various magnetic states. Fiz.met.i metalloved. 14 no.5:778-781 N '62. (MIRA 15:12)

1. Moskovskiy gosudarstvennyy universitet im. M.V.Lomonosova.
(Ferrates—Magnetic properties)

APPROVED FOR RELEASE: 07/19/2001 CIA-RDP86-00513R001446330001-9"

"APPROVED FOR RELEASE: 07/19/2001 CIA-RDP86-00513R001446330001-9

RYBAK, P.T.; SAVICH, V.V.

Chemical metal cutting. Mashinostroitel' no.3:34-35 Mr '64. (MIRA 17:4)

APPROVED FOR RELEASE: 07/19/2001 CIA-RDP86-00513R001446330001-9"

"APPROVED FOR RELEASE: 07/19/2001 CIA-RDP86-00513R001446330001-9

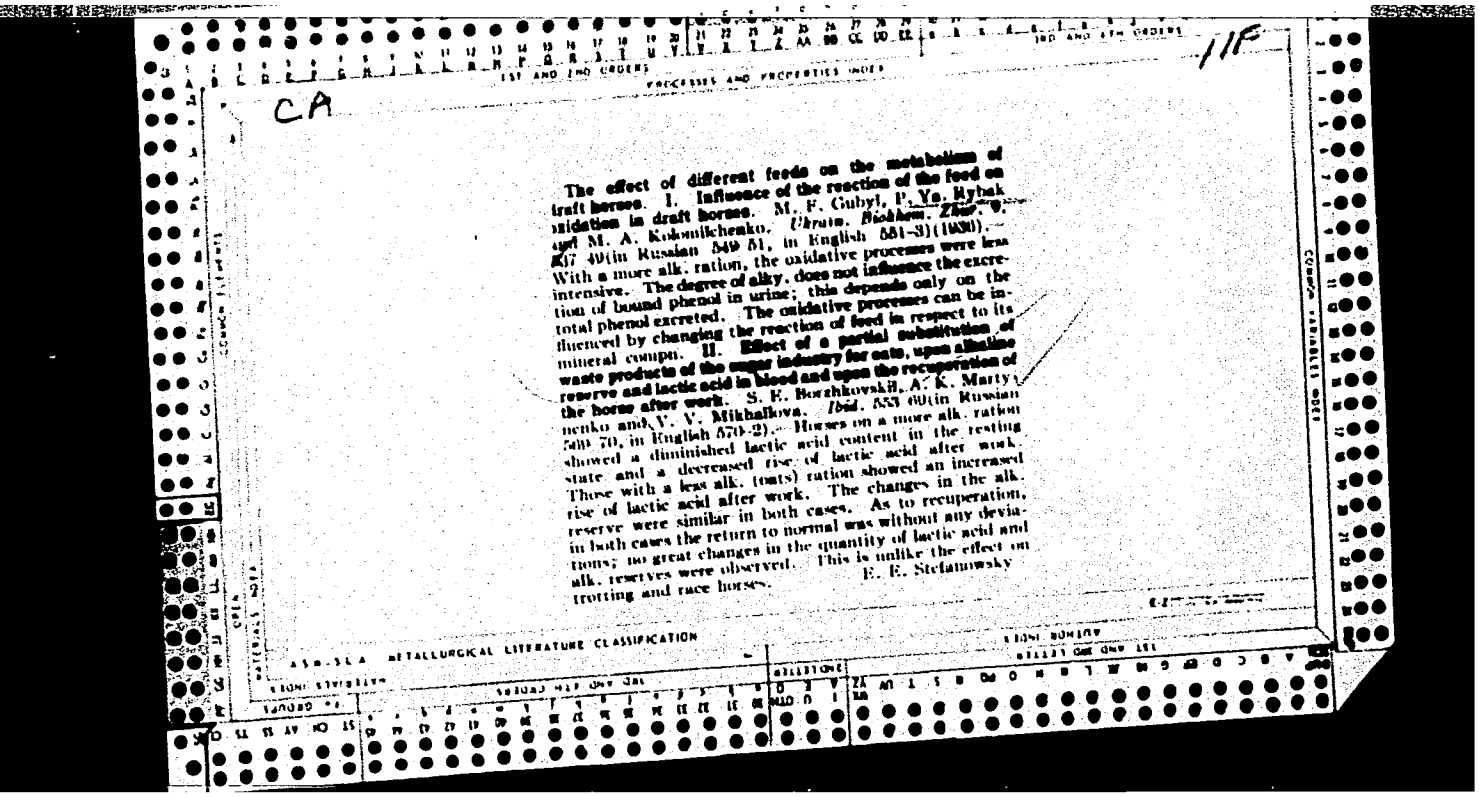

CA

The effect of different feeds on the metabolism of draft horses. I. Influence of the reaction of the feed on oxidation in draft horses. M. F. Gubyl, P. Ye. Mybak and M. A. Kokonilchenko. *Ukrain. Biokhem. Zhur.* 9, 407-40(in Russian 549-51, in English 551-3)(1937).— With a more alk. ration, the oxidative processes were less intensive. The degree of alky. does not influence the excretion of bound phenol in urine; this depends only on the total phenol excreted. The oxidative processes can be influenced by changing the reaction of feed in respect to its mineral compn. II. Effect of a partial substitution of waste products of the sugar industry for oats, upon alkaline reserve and lactic acid in blood and upon the recuperation of the horse after work. S. E. Borzhkovskii, A. K. Martynenko and V. V. Mikhailova. *Ibid.* 553-60(in Russian 569-70, in English 570-2).— Horses on a more alk. ration showed a diminished lactic acid content in the resting state and a decreased rise of lactic acid after work. Those with a less alk. (oats) ration showed an increased rise of lactic acid after work. The changes in the alk. reserve were similar in both cases. As to recuperation, in both cases the return to normal was without any deviations; no great changes in the quantity of lactic acid and alk. reserves were observed. This is unlike the effect on trotting and race horses. E. E. Stefanowsky

APPROVED FOR RELEASE: 07/19/2001 CIA-RDP86-00513R001446330001-9"

"APPROVED FOR RELEASE: 07/19/2001 CIA-RDP86-00513R001446330001-9

RYBAK, Prokofiy Yakovlevich; PENIONZHKO, A.M., red.; USACHEVA, I.G., red.; SOKOLOVA, N.N., tekhn.red.; PEVZNER, V.I., tekhn.red.

[Fundamentals of radiation pathology in animals] Osnovy radiatsionnoi patologii u zhivotnykh. Pod red. A.M.Penionzhko. Moskva, Gos.izd-vo sel'khoz.lit-ry, 1959. 230 p. (MIRA 13:1)
(RADIATION SICKNESS)

APPROVED FOR RELEASE: 07/19/2001 CIA-RDP86-00513R001446330001-9"

"APPROVED FOR RELEASE: 07/19/2001 CIA-RDP86-00513R001446330001-9

RYBAK P. YA.

ALICHKIN, S.L.; AGRINSKIY, N.I.; ANDREYEV, G.F.; BAKUMENKO, G.D.; VORONTSOV, S.M.; VOYSTRIKOV, I.V.; GRADYUSHKO, G.M.; ZYKOV, A.V. IVANOVTSEV, P.V.; KINBURG, M.Ya.; KOVALEV, P.A.; KOZLOVSKIY, Ye.V. KORNIYENKO, A.P.; KOLYAKOV, Ya.Ye.; LAKTIONOV, A.M.; LEVADNYY, B.A. MEDVEDEV, I.D.; NOVIKOV, N.V.; ORLOV, F.M.; OSTROVSKIY, A.A.; ORTSEV, V.P.; PENIONZHKO, A.M.; POLOZ, D.D.; PRITULIN, P.I.; PETUKHOVSKIY, A.A.; ROGALEV, G.T.; RYBAK, P.Ya.; SUTYAGIN, G.P. TUKOV, R.A.; KHAVCHENKO, D.F.; CHERNETSKIY, T.I.; SHPAYER, N.M. SHUSTOVSKIY, F.A.

Nikolai Vasil'evich Spesivtsev. Veterinariia 35 no.2:96 F '58. (MIRA 11:2)

(Spesivtsev, Nikolai Vasil'evich, 1901-1957)

APPROVED FOR RELEASE: 07/19/2001 CIA-RDP86-00513R001446330001-9"

"APPROVED FOR RELEASE: 07/19/2001 CIA-RDP86-00513R001446330001-9

BEZUGLAYA, L.S.; MARTYNOVA, T.A.; PETROVA, G.N.; RYBAK, R.S.

Determining the origin of the magnetization of rocks by comparing the stability characteristics as exemplified by iron-bearing quartzites in the Kursk Magnetic Anomaly. Izv. AN SSSR. Ser. geofiz. no.4:514-523 Ap '62. (MIRA 15:4)

1. Institut fiziki Zemli AN SSSR.
(Kursk Magnetic Anomaly--Quartzite--Magnetic properties)

APPROVED FOR RELEASE: 07/19/2001 CIA-RDP86-00513R001446330001-9"

"APPROVED FOR RELEASE: 07/19/2001 CIA-RDP86-00513R001446330001-9

1. A. K. BURYLENKO, V. M. DANILENKO, YU V. LIL'MAN, YU V. NAYDICH, S. A. RYBAK, A. A. SMIRNOV

2. USSR (600)

4. Alloys

7. Electrical resistance of well-organized alloys. Zhur eksp. i teor. fiz. 23 no. 6. 1952

9. Monthly List of Russian Accessions, Library of Congress, April 1953, Uncl.

APPROVED FOR RELEASE: 07/19/2001 CIA-RDP86-00513R001446330001-9"

"APPROVED FOR RELEASE: 07/19/2001 CIA-RDP86-00513R001446330001-9

RYBAK, S.A.

Theory of electrical resistivity of ordered alloys. A. K. Butylenko, V. M. Danilenko, Yu. V. Mil'man, Yu. V. Naidich, S. A. Rybak, and A. A. Smirnov. *Izvest. Kiev. Politekh. Inst.* 12, 18–24(1953); *Referat. Zhur., Fiz.* 1955, No. 9374; cf. *C.A.* 47, 3644*e*.—Exptl. curves illustrating the relation of elec. resistivity of ordered alloys ρ to compn. and degree of ordering differ from theoretical curves by the presence of rectilinear sections, by sharpness of the max., and in some cases by the rapid discontinuous changes of ρ with compn. If one considers that, at the same temp. for annealing T, the degree of ordering η, attained by alloys of different concns., is not the same, then the exptl. curves can be explained with the aid of known formulas detg. the equil. values of η at given values of T and c (concn.). The favorable effect of the indicated correction is illustrated graphically by a sample of alloys with face-centered and body-centered cubic lattices. It is noted that the skipping of $\rho(c)$ which is sometimes observed when compn. $c = 0.5$ is approached contradicts the statistical theory of ordering, which is not able to predict whether the order—non-order transitions in a given alloy are of 1st or 2nd order. This work confirms the usefulness of A. A. Smirnov's theory (*C.A.* 42, 8805*f*) in explaining the basic qual. features of change in ρ with the compn. which are observed in ordered alloys.—M. K.

(5)

APPROVED FOR RELEASE: 07/19/2001 CIA-RDP86-00513R001446330001-9"

"APPROVED FOR RELEASE: 07/19/2001 CIA-RDP86-00513R001446330001-9

RYBAK, S.A.

14215* Differential Magnetic Method for Investigating Steel and Alloys. Differentsial'nyi magnitnyi metod issledovaniia stalei i splavov. (Russian.) V. G. Permiakov, Iu. V. Naidich, and S. A. Rybak. *Zavodskaia Laboratoriia*, v. 21, no. 6, June 1955, p. 695-699.

Theoretical bases of proposed method for determining degree of magnetization; sample determination of residual austenite. Graphs, diagrams. 5 ref.

APPROVED FOR RELEASE: 07/19/2001 CIA-RDP86-00513R001446330001-9"

"APPROVED FOR RELEASE: 07/19/2001 CIA-RDP86-00513R001446330001-9

RYBAK, S.A.

56-7-21/66

AUTHOR KRIVOGLAZ,M.A., RYBAK,S.A.

TITLE On the Theory of Scattering of Light near Points of Phase Transitions of the Second Kind. (K teorii rasseyaniya sveta vblizi tochek fazovogo perekhoda vtorogo roda.- Russian)

PERIODICAL Zhurnal Eksperim. i Teoret. Fiziki 1957, Vol 33, Nr 7, pp 139-150 (USSR)

ABSTRACT

Here the scattering of light by seignette-electrical or ferromagnetic crystals near the points of the phase transitions of the second kind is investigated. Reference is made to brevious works dealing with the subject. The present paper undertakes a further theoretical investigation of this theorem, especially with respect to the seignette-electrica. The anisotropy of the fluctuations of the dielectricity constants is here taken into account. Also the influence exercised by the electric field upon the intensity of scattering is investigated. The additional scattering of light near the points of the phase transition of the second kind takes place on the inhomogeneities of the second tricity constants ϵ_0, which are caused by the fluctuations of the internal parameters. By means of the method

CARD 1/3

APPROVED FOR RELEASE: 07/19/2001 CIA-RDP86-00513R001446330001-9"

"APPROVED FOR RELEASE: 07/19/2001 CIA-RDP86-00513R001446330001-9

On the Theory of Scattering of Light near Points of Phase Transitions of the Second Kind.

56-7-21/66

developed by MOTULEVICH the authors here determine a formula for the intensity of scattering of light by the static distribution of inhomogeneities of the tensor of the dielectricity constant. Also the modification of the dielectricity constant connected with the fluctuations of polarization in this case is a tensor and no scalar. The vector of the polarization $\vec{P}$ can be divided up into its mean value P and in its fluctuation share $\Delta \vec{P}$. Next, a formula for the intensity of the scattered light is obtained which is connected with the fluctuations of the polarization. For the purpose of a more exact investigation of the dependence of the intensity of the scattered light on temperature and on electric field strength the following cases of seignette-electria are investigated here: certain crystals with cubic symmetry, crystals of the type of seignette salt and of the type KH_2PO_4. Besides tuations of polarization also fluctuations of ntration of one of the components of the solution ontained in binary solid solutions. The necessary , of magnitude for the intensities of the ring of light by singlecomponent seignette-

APPROVED FOR RELEASE: 07/19/2001 CIA-RDP86-00513R001446330001-9"

"APPROVED FOR RELEASE: 07/19/2001 CIA-RDP86-00513R001446330001-9

On the Theory of Scattering of Light near Points of Phase Transitions of the Second Kind.

electrica as well as by solid solutions can be determined by independent experiments. The results obtained here (after changing denotations) are seuited also for transparent ferromagnetic crystals. The results obtained by means of the theory of phase transitions of the second kind are suitable also for antiseignette-electrica and antiferromagnetica if the exterior electric and magnetic field respectively is missing. (No Illustrations)

ASSOCIATION: Institute for Metal Physics of the Academy of Sciences of the USSR. (Institut metallofiziki Akademii nauk Ukrainskoy SSR.)

PRESENTED BY: -

SUBMITTED: 23.12. 1956
AVAILABLE: Library of Congress.

CARD 3/3

APPROVED FOR RELEASE: 07/19/2001 CIA-RDP86-00513R001446330001-9"

"APPROVED FOR RELEASE: 07/19/2001 CIA-RDP86-00513R001446330001-9

RYBAK, S.A.

Scattering of a plane wave by small periodic inhomogeneities. Akust. zhur. 11 no.1:89-92 '65. (MIRA 18:4)

1. Akusticheskiy institut AN SSSR, Moskva.

APPROVED FOR RELEASE: 07/19/2001 CIA-RDP86-00513R001446330001-9"

"APPROVED FOR RELEASE: 07/19/2001 CIA-RDP86-00513R001446330001-9

S/046/63/009/001/012/026
B104/B186

AUTHORS: Rybak, S. A., Tartakovskiy, B. D.

TITLE: On the oscillations of thin plates

PERIODICAL: Akusticheskiy zhurnal, v. 9, no. 1, 1963, 66 - 71

TEXT: Making use of the exact solutions of the oscillation problem of a plane elastic layer, an attempt is made to find equations of symmetric and antisymmetric oscillations of thin plates in arbitrary approximation according to kh without additional hypothesis. The equations

$$(\hat{A}_1\hat{B}_1 - \hat{C}_1\hat{D}_1)U_{z0} = (\hat{A}_1 - \hat{C}_1)\frac{P_1 - P_2}{2(\lambda+2\mu)} - (B_1 - D_1)\frac{\nabla_r(\tau_1+\tau_2)}{2\mu}, \quad (5)$$

$$\hat{A}_1 = (\Delta_r + \hat{M}_l)\cos_l; \quad \hat{B}_1 = \left(-\hat{M}_l^{1/2} + \frac{\lambda}{\lambda+2\mu}\Delta_r\hat{M}_l^{-1/2}\right)\sin_l,$$

$$\hat{C}_1 = 2\Delta_r\cos_l; \quad \hat{D}_1 = -\frac{2\mu}{\lambda+2\mu}\hat{M}_l^{1/2}\sin_l,$$

Card 1/3

APPROVED FOR RELEASE: 07/19/2001 CIA-RDP86-00513R001446330001-9"

"APPROVED FOR RELEASE: 07/19/2001 CIA-RDP86-00513R001446330001-9

On the oscillations of thin plates

$$(\hat{A}_2\hat{B}_2 - \hat{C}_2\hat{D}_2)\,U_{r0} = -(\hat{A}_2 - \hat{C}_2)\frac{\nabla_r(P_1+P_2)}{2(\lambda+2\mu)} + (\hat{B}_2 - \hat{D}_2)\frac{\tau_2-\tau_2}{2\mu}, \qquad (6)$$

$$\hat{A}_2 = -(\hat{M}_l^{1/2} + \text{Grad Div}\,\hat{M}_l^{-1/2})\sin_l; \quad \hat{B}_2 = \left(-\hat{M}_l + \frac{\lambda}{\lambda+2\mu}\Delta_r\right)\cos_l,$$

$$\hat{C}_2 = -2\hat{M}_l^{1/2}\sin_l; \quad \hat{D} = -\frac{2\mu}{\lambda+2\mu}\text{Grad Div}\cos_l; \quad \cos_{t(l)} = \cos\left(\frac{h}{2}\hat{M}_{t(l)}^{1/2}\right).$$

are derived, which describe the transverse and longitudinal oscillations of a point in the middle plane of a thin layer. Here,

$$\hat{M}_{l_0} = -\frac{1}{c_l^2}\frac{\partial^2}{\partial t^2} + \Delta_r \qquad (2),$$

$$\hat{M}_l = -\frac{1}{c_l^2}\frac{\partial^2}{\partial t^2} + \Delta_r, \quad \left(\Delta_r = \frac{\partial^2}{\partial x^2} + \frac{\partial^2}{\partial y^2}\right).$$

and $\sin_{t(k)} = \sin\left(\frac{h}{2}\hat{\mu}_{t(l)}^{1/2}\right)$. These equations unite the shift of a given point in the middle plane with the forces given at a point at a finite distance from it. This leads to the presence of arbitrary-order differential operations in these equations and every term represents an infinite series

Card 2/3

APPROVED FOR RELEASE: 07/19/2001 CIA-RDP86-00513R001446330001-9"

"APPROVED FOR RELEASE: 07/19/2001 CIA-RDP86-00513R001446330001-9

of differential operations over the corresponding quantities. The shifts at the boundaries of the plate are connected with those of the middle plane, and equation

$$\rho h\ddot{U}_{x0}+\frac{h^3}{12}\frac{4\mu(\lambda+\mu)}{\lambda+2\mu}\Delta^2 U_{x0}+3\rho\frac{h^2}{12}b\Delta\ddot{U}_{x0}+$$

$$+\rho\frac{h^2}{12}\frac{4\mu(\lambda+\mu)}{\lambda+2\mu}\frac{h^2}{4\mu}c\Delta^2\ddot{U}_{x0}=d(P_1-P_2), \qquad (12)$$

$$d=1-\frac{h^2}{4}\left(\frac{3}{2}-\frac{\mu}{\lambda+2\mu}\right)\Delta.$$

is derived describing the bending waves. In a comparison with results of approximate theories it is shown that the equation of S. P. Timoshenko (Kolebaniya v inzhenernom dele - Oscillations in engineering fields, M. Fizmatgiz, 1959, 314 - 315) shows good approximations. There is 1 figure.

ASSOCIATION: Akusticheskiy institut AN SSSR, Moskva (Acoustics Institute AS USSR, Moscow)

SUBMITTED: July 26, 1962

Card 3/3

APPROVED FOR RELEASE: 07/19/2001 CIA-RDP86-00513R001446330001-9"

"APPROVED FOR RELEASE: 07/19/2001 CIA-RDP86-00513R001446330001-9

RYBAK, S.A.; TARTAKOVSKIY, B.D.

Vibrations of thin plates. Akust. zhur. 9 no.1:66-71 '63. (MIRA 16:5)

1. Akusticheskiy institut AN SSSR, Moskva.
(Elastic plates and shells--Vibration)

APPROVED FOR RELEASE: 07/19/2001 CIA-RDP86-00513R001446330001-9"

"APPROVED FOR RELEASE: 07/19/2001 CIA-RDP86-00513R001446330001-9

RYBAK, S.A.

Sound transmission through a periodically inhomogeneous plate immersed in a liquid. Akust.zhur. 8 no.1:113-118 '62. (MIRA 15:4)

1. Akusticheskiy institut AN SSSR, Moskva)
(Sound--Transmission)

APPROVED FOR RELEASE: 07/19/2001 CIA-RDP86-00513R001446330001-9"

"APPROVED FOR RELEASE: 07/19/2001 CIA-RDP86-00513R001446330001-9

RYBAK, S.A.; TARTAKOVSKIY, B.D.

Some applications of a transitive matrix to the theory of plane waves in a system of elastic layers. Akust.zhur. 8 no.1:119-123 '62. (MIRA 15:4)

1. Akusticheskiy institut AN SSSR, Moskva.
(Matrices) (Sound waves)

APPROVED FOR RELEASE: 07/19/2001 CIA-RDP86-00513R001446330001-9"

"APPROVED FOR RELEASE: 07/19/2001 CIA-RDP86-00513R001446330001-9

TARTAKOVSKIY, B. D. and [illegible], S. A.

"On vibration of layered plates with losses"

report submitted for the 4th Intl. Congress of Acoustics, Copenhagen, Denmark, 21-28 Aug 1962.

Acoustical Inst. of the Acad. of Sci. USSR, Moscow.

APPROVED FOR RELEASE: 07/19/2001 CIA-RDP86-00513R001446330001-9"

"APPROVED FOR RELEASE: 07/19/2001 CIA-RDP86-00513R001446330001-9

RYBAK, S.A.; TARTAKOVSKIY, B.D.

One case of complete sound insulation of a layered symmetrical partition. Akust. zhur. 7 no.4:497-499 '61. (MIRA 14:10)

1. Akusticheskiy institut AN SSSR, Moskva.
(Soundproofing)

APPROVED FOR RELEASE: 07/19/2001 CIA-RDP86-00513R001446330001-9"

"APPROVED FOR RELEASE: 07/19/2001 CIA-RDP86-00513R001446330001-9

RYBAK, S.A.; TARTAKOVSKIY, B.D.

Impedances due to symmetrical and antisymmetrical vibrations of laminar plates, involving losses. Akust. zhur. 7 no.4:475-481 '61. (MIRA 14:10)

1. Akusticheskiy institut AN SSSR, Moskva.
(Elastic plates and shells—Vibration)

APPROVED FOR RELEASE: 07/19/2001 CIA-RDP86-00513R001446330001-9"

"APPROVED FOR RELEASE: 07/19/2001 CIA-RDP86-00513R001446330001-9

S/046/62/008/001/012/018
B125/B104

AUTHOR: Rybak, S. A.

TITLE: Passage of sound through a periodically inhomogeneous plate in a liquid

PERIODICAL: Akusticheskiy zhurnal, v. 8, no. 1, 1962, 113-118

TEXT: The effect of a periodical inhomogeneity on the natural vibrations of a thin plate was investigated by the method of the small perturbations. The weak periodic changes of the density ϱ, the thickness h, and the radius of inertia $\varkappa$ of the cross section of this infinitely thin elastic plate is $\varrho = \varrho_0(1 + \varepsilon_1 \cos qx)$, $h = h_0(1 + \varepsilon_2 \cos qx)$, $\varkappa = \varkappa_0(1 + \varepsilon_3 \cos qx)$ with $\varepsilon_i \ll 1$, $i = 1,2,3$; $\varkappa = (h^3/12):(h/2)$. The eigensolutions

$$\frac{d^4}{dx^4} U_k - \lambda_k U_k^* + \varepsilon L_1 U_k^* = 0 \qquad (2)$$

$$\varepsilon = \varepsilon_2^* + \varepsilon_3, \quad \lambda_k = \frac{1-\sigma^2}{E} \frac{\rho_0}{\varkappa_0} \omega_k^2,$$

$$L_1 = \cos qx \left(\eta_1 \frac{d^4}{dx^4} - q^2 \frac{d^2}{dx^2}\right) - 2q \sin qx \frac{d^3}{dx^3}; \quad \eta_1 = \frac{\varepsilon_3 - \varepsilon_1}{\varepsilon_3 + \varepsilon_1}.$$

Card 1/5

APPROVED FOR RELEASE: 07/19/2001 CIA-RDP86-00513R001446330001-9"

"APPROVED FOR RELEASE: 07/19/2001 CIA-RDP86-00513R001446330001-9

Passage of sound through ...

are obtained from the equation of motion

$\frac{E}{1-\sigma^2}\frac{1}{h}\frac{\partial^2}{\partial x^2}\left(\varkappa h\frac{\partial^2}{\partial x^2}U\right)+\varrho\frac{\partial^2}{\partial t^2}U=P_1-P_2$ with the ansatz $\Psi_k=e^{iw_k t}\psi_k$ with an accuracy up to terms of the order of $\sim\mathcal{E}$. At sufficiently large N and taking into account the periodicity condition $\psi_k(x+a)=\psi_k(x)$ the normalized eigenfunctions of (2) can be formulated as

$\psi_{ok}=(1/\sqrt{a})e^{ikx}$ (5). N in $a=2\pi N/q$ is a natural number. $k=2\pi n/a=qn/N$ is the quasicontinuous spectrum of k and each value of λ_{ok} is doubly degenerate ($\lambda_{ok}=\lambda_{o-k}=k^4$). When k deviates considerably from q/2 the correction of first approximation $\lambda_{1k}=\varepsilon L_{1kk}$ for the eigenvalue is equal to zero, the correction of first approximation for the eigenfunction is

$$\psi_{1k}=\varepsilon\frac{L_{1k,\,k+q}}{\lambda_{k+q}-\lambda_k}\psi_{k+q}+\varepsilon\frac{L_{1k,\,k-q}}{\lambda_{k-q}-\lambda_k}\psi_{k-q}. \qquad (8)$$

Card 2/5

APPROVED FOR RELEASE: 07/19/2001 CIA-RDP86-00513R001446330001-9"

"APPROVED FOR RELEASE: 07/19/2001 CIA-RDP86-00513R001446330001-9

Passage of sound through ...

and the correction of second approximation for the eigenvalue is

$$\lambda_{2k} = \varepsilon^2\left(\frac{L_{1k,\,k+q}L_{1k+q,\,k}}{\lambda_{k+q}-\lambda_k} + \frac{L_{1k,\,k-q}L_{1k-q,\,k}}{\lambda_{k-q}-\lambda_k}\right). \qquad (7).$$

When the eigenvalues of zero approximation of λ_k are in the neighborhood of the points $\pm q/2$ (where $k = q/2-\eta$), the zero approximation of the eigenfunction is $\psi'_{ok} = (1/\sqrt{a(1+\alpha_k^2)})\,(e^{ikx} + \alpha_k e^{-ik'x})$ (10), and for the eigenvalue λ_{ok} the first approximation connection is $\varepsilon\lambda_{1k} = \pm\varepsilon\sqrt{L_{1k,-k'}L_{1-k',k} + (\mu\eta_2)^2}$. The figure shows a characteristic dispersion function $\omega(k)$ which is discontinuous at $k = \pm q/2$. In the points $\pm q/2$ the eigenfunctions (10) form standing waves and the eigenfunctions (5) become more suitable as the distance from $q/2$ increases. No resonance is caused by external stresses of the plate at frequencies within the range $\Delta\omega_o$. The plate in the liquid begins to vibrate according

Card 3/5

APPROVED FOR RELEASE: 07/19/2001 CIA-RDP86-00513R001446330001-9"

"APPROVED FOR RELEASE: 07/19/2001 CIA-RDP86-00513R001446330001-9

Passage of sound through ...

to

$$D\left(\frac{d^4}{dx^4}U - \varepsilon L_1 U\right) - \omega^2 \rho_0 h U = 2e^{ikx} + 2\chi$$
$$\left(D = \frac{E}{1-\sigma^2} h\varkappa_0\right). \qquad (17)$$

under the action of an incident plane wave $p_i = e^{i(kx-kz)}$ where the z-axis which is perpendicular to the plate points in the direction of the incident wave. The reflected and the passing field of sound contain progressive components with the amplitude ϵ at angles θ_1 and θ_2. With inhomogeneities of arbitrary degree non-mirror-type reflections are observed. At $z_k = 0$; $k \pm q/2$ a maximum non-mirror-type field is observed. The continuity of the dispersion curve and the non-mirror-type reflection are observed also in symmetrical vibrations of the plate. There are 1 figure and 9 references: 4 Soviet and 5 non-Soviet. The reference to the English-language publication reads as follows: M. Heckl, Wave propagation on Beam = Plate systems. J. Acoust. Soc. America, 1961, 33, 5, 640.

Card 4/5

APPROVED FOR RELEASE: 07/19/2001 CIA-RDP86-00513R001446330001-9"

"APPROVED FOR RELEASE: 07/19/2001 CIA-RDP86-00513R001446330001-9

Passage of sound through ... S/046/62/008/001/012/018
B125/B104

ASSOCIATION: Akusticheskiy institut AN SSSR Moskva (Acoustics Institute of the AS USSR Moscow)

SUBMITTED: November 14, 1961

Fig. ω as a function of $k = q/2$

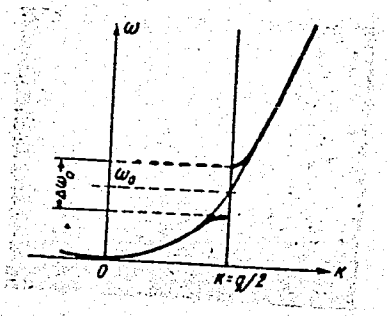

Card 5/5

APPROVED FOR RELEASE: 07/19/2001 CIA-RDP86-00513R001446330001-9"

"APPROVED FOR RELEASE: 07/19/2001 CIA-RDP86-00513R001446330001-9

RYBAK, S.A.; TARTAKOVSKIY, B.D.

"Noise reduction" edited by L.L.Beranek. Reviewed by S.A.Rybak and B.D.Tartakovskii. Akust.zhur. 7 no.2:271-272 '61. (MIRA 14:7)
(Acoustics) (Beranek, L.L.)

APPROVED FOR RELEASE: 07/19/2001 CIA-RDP86-00513R001446330001-9"

"APPROVED FOR RELEASE: 07/19/2001 CIA-RDP86-00513R001446330001-9

30053
S/046/61/007/004/010/014
B104/B102

24.4200 1327

AUTHORS: Rybak, S. A., Tartakovskiy, B. D.

TITLE: Impedances in case of symmetrical and antisymmetrical vibrations of stratified plates exhibiting losses

PERIODICAL: Akusticheskiy zhurnal, v. 7, no. 4, 1961, 475-481

TEXT: Vibrations of three-layer plates are investigated without the use of Kirchhoff's law. At first, the vibration of a single plate is studied. The deformation vector for antisymmetrical vibrations is represented by

$$U_a(x, z) = (U_{loz}\cos(k_z z) + U_{loz}\cos(q_z z))\, e^{ikx},$$
$$V_a(x, z) = \left(-U_{loz}\frac{ik_z}{k}\sin(k_z z) + U_{loz}\frac{ik}{q_z}\sin(q_z z)\right)e^{ikx}. \quad (1),$$

that for symmetrical vibrations by

$$U_s(x, z) = \left(-U_{lox}\frac{ik}{k_z}\sin(k_z z) + U_{lox}\frac{iq_z}{k}\sin(q_z z)\right)e^{ikx}, \quad (4).$$
$$V_s(x, z) = (U_{loz}\cos(k_z z) + U_{lox}\cos(q_z z))\, e^{ikx}$$

Card 1/6

APPROVED FOR RELEASE: 07/19/2001 CIA-RDP86-00513R001446330001-9"

"APPROVED FOR RELEASE: 07/19/2001 CIA-RDP86-00513R001446330001-9

U_{toz} and U_{loz} stand for the amplitudes of the transverse and longitudinal displacements in the z-direction, U_{tox} and U_{lox} denote those of the transverse and longitudinal displacements in the x-direction. The equations $k_z^2 + k^2 = \omega^2/c_t^2$ and $q_z^2 + k^2 = \omega^2/c_l^2$ are satisfied, where c_t and c_l are the transverse and longitudinal velocities. The conditions $U(z) = U(-z)$, $V(z) = -V(-z)$, $\sigma_{zz}(z) = -\sigma_{zz}(-z)$, $\sigma_{xz}(z) = \sigma_{xz}(-z)$ belong to (1), whereas the conditions $V(z) = V(-z)$, $U(z) = -U(-z)$; $\sigma(z) = \sigma(-z)$, $\sigma(z) = -\sigma(-z)$ belong to (4). It is shown that the four conditions given for the two cases investigated may be substituted by two conditions each: $= a_1 + a_2 U$; $V = d_1 + d_2 U$, and $= b_1 + b_2 U$; $V = c_1 + c_2 U$, respectively. The authors obtained

$$a_1 = \frac{1}{ikk_z}\frac{\omega^2}{c_t^2}\frac{1}{\gamma_2}, \quad a_2 = \frac{\mu}{ik}\frac{\Delta}{\gamma_2 k_z q_z},$$
$$d_1 = \frac{1}{ik}\frac{1}{\mu}\frac{\gamma_1}{\gamma_2}, \quad d_2 = \frac{1}{ikq_z}\frac{\omega^2}{c_l^2}\frac{\gamma_2}{\gamma_2}, \qquad (7)$$

Card 2/6

APPROVED FOR RELEASE: 07/19/2001 CIA-RDP86-00513R001446330001-9"

"APPROVED FOR RELEASE: 07/19/2001 CIA-RDP86-00513R001446330001-9

and

$$c_1 = \frac{1}{ik}\,\frac{1}{\mu}\,\frac{\delta_1}{\delta_2}, \qquad c_2 = -\frac{1}{ikq_z}\,\frac{\omega^2}{c_l^2}\,\frac{1}{\delta_2}, \tag{8}$$

$$b_1 = -\frac{1}{ikk_z}\,\frac{\delta_3}{\delta_2}\,\frac{\omega^2}{c_l^2}, \qquad b_2 = \frac{\Delta_1}{\delta_2}\,\frac{1}{k_z q_z}\,\frac{\mu}{ik}, \tag{9}$$

respectively, for the coefficients of these conditions, where and are the Lamé coefficients, as well as

$$\gamma_1 = \frac{k^2}{k_z q_z}\,\mathrm{tg}\left(q_z\frac{h}{2}\right) + \mathrm{tg}\left(k_z\frac{h}{2}\right)\quad \gamma_2 = 2\,\mathrm{tg}\left(k_z\frac{h}{2}\right) - \tag{A}$$

$$-\frac{k_z^2 - k^2}{k_z q_z}\,\mathrm{tg}\left(q_z\frac{h}{2}\right);\quad \gamma_3 = \mathrm{tg}\left(k_z\frac{h}{2}\right)\cdot\mathrm{tg}\left(q_z\frac{h}{2}\right),$$

$$\Delta = 4k^2 k_z q_z\,\mathrm{tg}\left(k_z\frac{h}{2}\right) + (k_z^2 - k^2)^2\,\mathrm{tg}\left(q_z\frac{h}{2}\right).$$

and

APPROVED FOR RELEASE: 07/19/2001 CIA-RDP86-00513R001446330001-9"

"APPROVED FOR RELEASE: 07/19/2001 CIA-RDP86-00513R001446330001-9

$$\delta_1 = \frac{k^2}{k_z q_z} \operatorname{tg}\left(k_z \frac{h}{2}\right) + \operatorname{tg}\left(q_z \frac{h}{2}\right), \quad \delta_2 = 2 \operatorname{tg}\left(q_z \frac{h}{2}\right) - \frac{k_z^2 - k^2}{k_z q_z} \operatorname{tg}\left(k_z \frac{h}{2}\right),$$
$$\delta_3 = \operatorname{tg}\left(k_z \frac{h}{2}\right) \operatorname{tg}\left(q_z \frac{h}{2}\right), \quad \Delta_1 = 4k^2 k_z q_z \operatorname{tg}\left(q_z \frac{h}{2}\right) + (k_z^2 - k^2)^2 \operatorname{tg}\left(k_z \frac{h}{2}\right). \qquad (B).$$

These results are used for the computation of antisymmetrical vibrations occurring in a three-layer plate, the outer layers being of identical composition. In this case, the vibrations of the central layer is antisymmetrical, whereas those of the two outer layers are symmetrical and antisymmetrical. The expression

$$\frac{\sigma_1}{U_1} = z = -\frac{c_{21}(2a_{12}a_{21} + a_{11}a_{22}) + 2(d_{22} + d_{21})b_{21}(a_{12} + a_{11}) - 2d_{12}b_{21}(a_{22} - 2a_{21})}{(2d_{22} - c_{21})a_{11}(a_{12} + b_{11}) + 2(d_{12} - c_{11})a_{11}(-a_{22} + b_{21})} \qquad (13)$$

is obtained for the impedance, where

Card 4/6

APPROVED FOR RELEASE: 07/19/2001 CIA-RDP86-00513R001446330001-9"

"APPROVED FOR RELEASE: 07/19/2001 CIA-RDP86-00513R001446330001-9

$$a_{11}=\frac{2}{ikh_1},\quad a_{21}=-\frac{1}{ikh_1}L_1,\quad b_{11}=\frac{\lambda+2\mu}{\lambda}\frac{1}{ik}\frac{h_1}{2}q_z^2,$$
$$b_{21}=\frac{1}{ikh_1}\frac{\lambda+2\mu}{\lambda}M_1,\quad d_{11}=\frac{1}{ik\mu},\quad d_{21}=\frac{1}{ik}\frac{h_1}{2}k_z^2,\quad c_{11}=-\frac{1}{ik\lambda},$$
$$c_{21}=\frac{\lambda+2\mu}{\lambda}\frac{2}{ikh_1},\quad L=-\rho h\omega^2+\frac{4\mu(\lambda+\mu)}{\lambda+2\mu}\frac{h^3}{12}k^4, \qquad (12).$$
$$M=-\rho h\omega^2+\frac{4\mu(\lambda+\mu)}{\lambda+2\mu}hk^2$$

Furthermore, the absorption coefficient is derived for plane waves in a plate containing an absorbing layer. The absorption of antisymmetrical bending waves in a three-layer plate exhibiting losses is investigated. There are 4 references: 2 Soviet and 2 non-Soviet. The two references to English-language publications read as follows: W. Thompson. Transmission of elastic waves through a stratified solid material. J. Appl. Phys., 1950, 21, 2; D. Ross, E. Ungar, E. Kerwin. Structural Damping. Pergamon Press. 1959, 49-87.

Card 5/6

APPROVED FOR RELEASE: 07/19/2001 CIA-RDP86-00513R001446330001-9"

"APPROVED FOR RELEASE: 07/19/2001 CIA-RDP86-00513R001446330001-9

30053
S/046/61/007/004/010/014
Impedances in case of symmetrical and ... B104/B102

ASSOCIATION: Akusticheskiy institut AN SSSR Moskva (Acoustics Institute AS USSR, Moscow)

SUBMITTED: August 5, 1961

X

Card 6/6

APPROVED FOR RELEASE: 07/19/2001 CIA-RDP86-00513R001446330001-9"

"APPROVED FOR RELEASE: 07/19/2001 CIA-RDP86-00513R001446330001-9

24.1200 (1144, 1147, 1327)
17.1350

30055
S/046/61/007/004/013/014
B104/B102

AUTHORS: Rybak, S. A., Tartakovskiy, B. D.

TITLE: Total sound isolation when sound is passing through a symmetrically laminated wall

PERIODICAL: Akusticheskiy zhurnal, v. 7, no. 4, 1961, 497-499

TEXT: The passage of a plane sound wave through a plane, elastic wall which is dipped in a gas or liquid has been studied. The elastic constants of the wall are even functions of the distance from the central layer of the wall. The problem is solved by introducing impedances of symmetrical waves z_s and antisymmetrical waves z_a. According to definition the following expressions hold: $z_s = (P_1 + P_t)/(V_1 - V_2)$ and $z_a = (P_1 - P_t)/(V_1 + V_2)$. For plane waves propagating in a homogeneous liquid, the following boundary conditions are obtained: $V_1 = (P_i - P_r)\cos\vartheta/\rho c$ and $V_2 = P_t \cos\vartheta/c$, where ϑ is the angle of incidence, $P_1 = P_i + P_r$ the

Card 1/4

APPROVED FOR RELEASE: 07/19/2001 CIA-RDP86-00513R001446330001-9"

"APPROVED FOR RELEASE: 07/19/2001 CIA-RDP86-00513R001446330001-9

pressure on the front, and P_t that on the back side, while V_1 and V_2 are the normal components of velocity. These equations yield:

$$V=\frac{P_r}{P_i}=\frac{z_s z_a-z_0^2}{(z_s+z_0)(z_a+z_0)},$$
$$D=\frac{P_t}{P_i}=\frac{z_0(z_s-z_a)}{(z_s+z_0)(z_a+z_0)}\left(z_0=\frac{\rho c}{\cos\theta}\right). \quad (3)$$

For $z_s = z_a = z$ (4), the expression $V = (z - z_o)/(z + z_o)$ holds, and the transmittance D vanishes. For real values of z_o and imaginary values of z (no absorption in the medium) V will be equal to unity. This shows that for an angle of incidence, where z_s and z_a are equal, no sound will pass through a symmetrically laminated wall. The following example is investigated: A homogeneous plate having a thickness h is located in a liquid. The impedances are given by

Card 2/4

APPROVED FOR RELEASE: 07/19/2001 CIA-RDP86-00513R001446330001-9"

"APPROVED FOR RELEASE: 07/19/2001 CIA-RDP86-00513R001446330001-9

Total sound isolation when sound is ...

$$z_a = \mu\left[\operatorname{tg}\left(\frac{h}{2}k_z\right)4k^2k_zq_z + \operatorname{tg}\left(\frac{h}{2}q_z\right)(k_z^2-k^2)^2\right]\Big/ i\omega q_z\frac{\omega^2}{c_l^2};$$

$$z_s = \mu\left[\operatorname{tg}\left(\frac{h}{2}q_z\right)4k^2k_zq_z + \operatorname{tg}\left(\frac{h}{2}k_z\right)(k_z^2-k^2)^2\right]\Big/ -i\omega q_z\frac{\omega^2}{c_l^2}\operatorname{tg}\left(\frac{h}{2}k_z\right)\operatorname{tg}\left(\frac{h}{2}q_z\right); \quad (6)$$

$$k = \frac{\omega}{c_m}\sin\theta; \quad k_z = \sqrt{\frac{\omega^2}{c_l^2}-k^2}; \quad q_z = \sqrt{\frac{\omega^2}{c_l^2}-k^2}.$$

Substituting this into (4) will yield the condition for total sound absorption

$$4k^2k_z\sin(hq_z) + (k_z^2-k^2)^2\sin(hk_z) = 0. \quad (7)$$

The sines are expanded in a series and the following expression is obtained:

$$\frac{4k^2q_z^2}{(k_z^2-k^2)^2} = -1 + \frac{h^2\omega^2}{6}\left(\frac{1}{c_l^2}-\frac{1}{c_l^2}\right). \quad (8)$$

Card 3/4

APPROVED FOR RELEASE: 07/19/2001 CIA-RDP86-00513R001446330001-9"

"APPROVED FOR RELEASE: 07/19/2001 CIA-RDP86-00513R001446330001-9

Total sound isolation when sound is ...

In second approximation,

$$k^2 = \frac{\omega^2}{c_n^2}\left[1 - \frac{h^2\omega^2}{12}\left(\frac{1}{c_t^2} - \frac{2}{c_l^2}\right)\right]. \qquad (A)$$

is obtained as solution of (8). Substituting this expression into the condition $\sin\theta = kc_{liqu}/\omega$ yields the angle of incidence, where total reflection will occur. Eq. (4) is only fulfilled by Rayleigh waves. There is 1 Soviet reference.

ASSOCIATION: Akusticheskiy institut AN SSSR Moskva (Acoustics Institute AS USSR, Moscow)

SUBMITTED: August 5, 1961

Card 4/4

APPROVED FOR RELEASE: 07/19/2001 CIA-RDP86-00513R001446330001-9"

"APPROVED FOR RELEASE: 07/19/2001 CIA-RDP86-00513R001446330001-9

AUTHORS: Krivoglaz, M. A., Rybak, S. A. 57-28-5-5/36

TITLE: Influence of Static Inhomogeneities in a Crystal Lattice on the Electron Properties of a Semiconductor (Vliyaniye staticheskikh neodnorodnostey kristallicheskoy reshetki na elektronnyye svoystva poluprovodnika)

PERIODICAL: Zhurnal Tekhnicheskoy Fiziki, 1958, Vol. 28, Nr 5, pp. 940-959 (USSR)

ABSTRACT: Static inhomogeneities of the potential exist in solid solutions, which are connected with concentration fluctuations. In this case the fluctuations on the decomposition curve near the critical point become very high. In the present paper the authors investigated the influence of static inhomogeneities on the free length of path, on the mobility and on the partition function of the conduction electrons in a semiconductor. Knowledge of the partition function on its part permits to determine the equilibrium concentration of the electrons, the thermo-emission of electrons from the semiconductor, the heat capacity of the gas etc. (Reference

Card 1/6

APPROVED FOR RELEASE: 07/19/2001 CIA-RDP86-00513R001446330001-9"

"APPROVED FOR RELEASE: 07/19/2001 CIA-RDP86-00513R001446330001-9

3). The computations were performed by perturbational methods under the assumption, that the potential produced by the inhomogeneities is sufficiently small. Besides, the approximation of an isotropic continuum was used. In a rigorous consideration of the interaction of the polaron with static inhomogeneities not only the direct effect of these inhomogeneities on the electron, but also on the polarization well of the polaron, which is connected with the modification of normal oscillations and the energy of the interaction of the oscillations with the electron should be taken into account. The here given formulae for the free path and the motion are based upon Lorentz's solution of the kinetic equation. They can be applied in cases, where the probability of dispersion is only dependent upon the dispersion angle and not on the orientation of the wave vector of the incident wave with respect to the crystal axes. The probability of fluctuations of magnetization near the Curie temperature can be determined by means of the thermo-

APPROVED FOR RELEASE: 07/19/2001 CIA-RDP86-00513R001446330001-9"

"APPROVED FOR RELEASE: 07/19/2001 CIA-RDP86-00513R001446330001-9

-dynamical theory of phase transitions of second kind by Landau (Reference 6), which was developed by Vonsovskiy (Reference 7) and Ginzburg (Reference 8) for the application to ferro-magnetics. If the dimensionless parameter ε is considerably less than unity, then the correction of the partition function at the Curie point connected with fluctuations of the magnetization, proves to be greater by the factor of $\sqrt{\frac{\mu}{\varepsilon}}$ in the case of strong interaction than in case of weak interaction. If $\varepsilon \gg 1$, then the correction in case of strong interaction with the oscillation increases by the factor of: $\frac{2}{\pi}\sqrt{\frac{E\pi}{3kT}}$. From this it can be seen, that the fluctuation in every case of a marked correlation with the oscillations exerts a greater influence than in case of weak correlation. In a rough numerical approximation only the ex-

Card 3/6

APPROVED FOR RELEASE: 07/19/2001 CIA-RDP86-00513R001446330001-9"

"APPROVED FOR RELEASE: 07/19/2001 CIA-RDP86-00513R001446330001-9

change reaction with the fluctuations was taken into account. Near the Curie temperature a dependence of the magnetic susceptibility on the magnetic field in relatively weak fields must be observed. Apart from the usual modifications of mobility reducing this mobility also an anomalous modification of mobility in the magnetic field causing the increase of mobility must take place. At temperatures sufficiently near the Curie point this effect may preponderate. The modification of the partition function must also be observed in this range. Experimental investigation of the dependence of the mobility and of the concentration of conduction electrons on temperature and on the magnetic field should be of interest particularly in that case, where the transition to the ferromagnetic state proceeds at low temperatures. The computation conducted on the basis of perturbation theory is not applicable to piezoelectrics. In piezoelectrics and in the pyro-electric range a strong anisotropy of mobility must be observable. The energetic spectrum of conduction electrons in

APPROVED FOR RELEASE: 07/19/2001 CIA-RDP86-00513R001446330001-9"

"APPROVED FOR RELEASE: 07/19/2001 CIA-RDP86-00513R001446330001-9

piezoelectrics markedly differs from that in ideal crystals. As to its nature it is nearer to the energetical spectrum of electrons in a liquid. The fluctuations of the composition in solid solutions exert a great influence on the electron properties of the semiconductor. Particularly strong effects must occur in the vicinity of the critical point of the decomposition curve. In the ideal solutions of the investigated type the free length of path is independent of temperature and is inversely proportional to $c(1-c)$. The mobility is inversely proportional to $T^{1/2}$ and $c(1-c)$.
There are 2 figures and 15 references, 11 of which are Soviet.

ASSOCIATION: Institut metallofiziki AN USSR, Kiyev
(Institute of Metal Physics, AS Ukrainian SSR, Kiyev)

APPROVED FOR RELEASE: 07/19/2001 CIA-RDP86-00513R001446330001-9"

"APPROVED FOR RELEASE: 07/19/2001 CIA-RDP86-00513R001446330001-9

Influence of Static Inhomogeneities in a Crystal Lattice on the Electron Properties of a Semiconductor

57-28-5-5/36

SUBMITTED: December 29, 1956

1. Crystal structure--Analysis 2. Semiconductors--Photoconductivity

Card 6/6

APPROVED FOR RELEASE: 07/19/2001 CIA-RDP86-00513R001446330001-9"

"APPROVED FOR RELEASE: 07/19/2001 CIA-RDP86-00513R001446330001-9

KRIVOGLAZ, M.A.; RYBAK, S.A.

Effect of static heterogeneities in crystal lattices on electron properties of semiconductors. Zhur. tekh. fiz. 28 no.5:940-959 My '58. (MIRA 11:6)

1.Institut metallofiziki AN USSR, Kiyev.
(Semiconductors) (Crystal lattices)

APPROVED FOR RELEASE: 07/19/2001 CIA-RDP86-00513R001446330001-9"

"APPROVED FOR RELEASE: 07/19/2001 CIA-RDP86-00513R001446330001-9

Rybak, S.A.

KRIVOGLAZ, M.A.; RYBAK, S.A.

On the theory of scattering of light near points of phase transitions of the second kind [with summary in English]. Zhur. eksp. i teor. fiz. 33 no.1:139-150 Jl '57. (MLRA 10:9)

1. Institut metallofiziki Akademii nauk Ukrainskoy SSR.
(Light--Scattering)
(Ferroelectric substances--Optical properties)

APPROVED FOR RELEASE: 07/19/2001 CIA-RDP86-00513R001446330001-9"

"APPROVED FOR RELEASE: 07/19/2001 CIA-RDP86-00513R001446330001-9

ACCESSION NR: AP4041349 S/0115/64/000/005/0053/0056

AUTHOR: Vinogradov, A. F.; Ry*bak, S. P.; Shibanova, M. D.

TITLE: Electronic recorder for continuous measuring of the alpha radiation of radioactive gases

SOURCE: Izmeritel'naya tekhnika, no. 5, 1964, 53-56

TOPIC TAGS: radioactive material, radioactive gas, radioactivity, radioactive measurement, ERU-3 recorder

ABSTRACT: The general description of an ERU-3 alpha-radiation recorder intended for various physical and chemical investigations by the emanation method is presented. A radioactive gas (Tn, An) along with the carrier gas (nitrogen, air) is passed through a steel-shielded pulse ionization chamber. The chamber pulses are pre-amplified and applied to the input of the main amplifier. From the amplifier output, the pulses go into a counting-rate meter with a pointer-type

Card 1/2

APPROVED FOR RELEASE: 07/19/2001 CIA-RDP86-00513R001446330001-9"

"APPROVED FOR RELEASE: 07/19/2001 CIA-RDP86-00513R001446330001-9

ACCESSION NR: AP4041349

indicator and EPP-09-1M recording potentiometer. The entire ERU-3 recorder consists of 9 units, of which 5 are standard units and the ionization chamber (design features supplied), its h-v supply pack, the counting-rate meter, and an antinoise unit (suppressing the noise in 220 v a-c supply) are special devices. The gas temperature may be as high as 150C; the working voltage of the chamber is 1,200—1,400 v; the range 200—60,000 pulse/min is subdivided into four subranges; sensitivity, 5×10^{-11} curies; chamber background, 50—100 pulse/min; perfectly clean chambers had a background of 5 p/min. Orig. art. has: 3 figures and 1 table.

ASSOCIATION: Institut fizicheskoy khimii AN SSSR (Institute of Physical Chemistry, AN SSSR)

SUBMITTED: 00 ENCL: 00

SUB CODE: MP NO REF SOV: 007 OTHER: 000

Card 2/2

APPROVED FOR RELEASE: 07/19/2001 CIA-RDP86-00513R001446330001-9"

"APPROVED FOR RELEASE: 07/19/2001 CIA-RDP86-00513R001446330001-9

VINOGRADOV, A.P.; [illegible], A.I.; [illegible], N.D.

Electronic recording unit for continuous measurement of the alpha-radiation of radioactive gases. Izm. tekh. no.5:53-56 My '64 (MIRA 17:7)

APPROVED FOR RELEASE: 07/19/2001 CIA-RDP86-00513R001446330001-9"

"APPROVED FOR RELEASE: 07/19/2001 CIA-RDP86-00513R001446330001-9

VINOGRADOV, A.F.; CHIGAREV, L.I.; RYBAK, S.P.

Proportional radiation counters with industrial equipment. Izm.tekh. no.5:49-52 My '61. (MIRA 14:5)
(Nuclear counters)

APPROVED FOR RELEASE: 07/19/2001 CIA-RDP86-00513R001446330001-9"

"APPROVED FOR RELEASE: 07/19/2001 CIA-RDP86-00513R001446330001-9

AZBELEV, P.P.; RYBAK, S.S.

Semiconductor direct to three-phase current converter. Izv. vys.ucheb.zav.; prib. 4 no.3:47-54 '61. (MIRA 14:6)

1. Leningradskiy elektrotekhinicheskiy institut imeni V.I.Ul'yanova (Lenina). Rekomendovana kafedroy avtomatiki i telemkhaniki.
(Electric current converters)

APPROVED FOR RELEASE: 07/19/2001 CIA-RDP86-00513R001446330001-9"

"APPROVED FOR RELEASE: 07/19/2001 CIA-RDP86-00513R001446330001-9

Rybak, S.S.

BAYDA, L.I., kand.tekhn.nauk; RYBAK, S.S., inzh.

Contact transformer changing d.c. to a.c. and having a sparkless commutation. Vest.elektroprom. 28 no.8:53-57 Ag '57. (MIRA 10:10)

1.Leningradskiy elektrotekhnicheskiy institut.
(Electric transformers)

APPROVED FOR RELEASE: 07/19/2001 CIA-RDP86-00513R001446330001-9"

"APPROVED FOR RELEASE: 07/19/2001 CIA-RDP86-00513R001446330001-9

28955
S/146/61/004/003/004/013
D217/D301

13.2520

AUTHORS: Azbelev, P.P., and Rybak, S.S.

TITLE: A semi-conductor device for converting direct current into three-phase alternating current

PERIODICAL: Izvestiya vysshikh uchebnykh zavedeniy. Priborostroyeniye, v. 4, no. 3, 1961, 47 - 54

TEXT: This problem arose in connection with portable gyro-compasses. The gyrometer was driven by a three-phase current converted from a battery source. The conversion into d.c. is widely discussed. There are only a few published works on conversion into t.p. and those published have a series of defects. A system with only one transformer is used for analyzing the general case of assymmetrical load. Vector analysis gives Fig. 2 and

$$\dot{I}_{p1} = \frac{3w}{2w_{cp}} (\dot{I}_A + \dot{I}_C), \quad \dot{I}_{p2} = \frac{w}{2w_{\delta}} (\dot{I}_A - \dot{I}_C) \qquad (2)$$

Card 1/4

APPROVED FOR RELEASE: 07/19/2001 CIA-RDP86-00513R001446330001-9"

"APPROVED FOR RELEASE: 07/19/2001 CIA-RDP86-00513R001446330001-9

where U_1 and U_2 are the voltages in the two-phase primary circuit and W_{cp}, W_δ' and W_δ'' are the number of turns in the center and two outer legs respectively; U_A, I_A, U_B, I_B, U_C and I_C are the voltages and currents of the three phases. The analysis of Eq. (2) shows that the converter does add assymetry in the primary load, and its assymetry is linear with respect to the load assymetry. It is assumed that the magnetizing currents on the 3 legs are almost -equal and the efficiency of both sources is the same. It is important to note that leakage inductance is not symmetrical. It must be accounted for in the design. The analysis for two transformers gives the same result. The Fourier analysis shows that there is no zero sequence, that 1 + 4n (n = 0, 1, 2, ...) harmonics are direct, and that 3 + 4n (n = 0, 1, 2, ...) harmonics are inverse. The fundamentals are all equal. Distortion depends on the magnitude and power factor of the load, and also on the leakage in the transformer windings. A block diagram is given. The master oscillator gives 6-8V sharp pulses of few tenths of μ sec. duration.

APPROVED FOR RELEASE: 07/19/2001 CIA-RDP86-00513R001446330001-9"

"APPROVED FOR RELEASE: 07/19/2001 CIA-RDP86-00513R001446330001-9

A semi-conductor device for ...

If for temperatures -20°C to +50°C frequency stability is written ± 1 %, a multivibrator with silicon triodes may be used. Pulses are directed into 3 trigger circuits, whose sequence of work is directed by a coincidence circuit. There are preliminary and output amplifiers which are provided to avoid heavy losses in trigger. Data for operating the converter (at temperatures -30°C - + 50°C); direct voltage 12V (± 15 %); output voltage 36 V; frequency 400 c/s (± 1.2 %). At temperature variations of ± 3°C to ± 5°C the frequency variation does not exceed 0.5 %. Energy taken: a) under normal working conditions 39-40 W, b) for the first 3-4 minutes 60-65 W. Energy given: a) under normal working conditions 22-24 W, b) for the first 3-4 minutes 36 - 40 W. Cos φ of load 0.85, dimensions of transformer 220 x 130 x 100 mm. Weight 3.0 Kg. An output voltmeter is added. There are 6 figures and 5 references: 4 Soviet-bloc and 1 non-Soviet-bloc. The reference to the English-language publication reads as follows: I.C. Hogan, Analysis of single phase to three phase converters. Applic. and Ind. 1956, no. 22.

Card 3/4

APPROVED FOR RELEASE: 07/19/2001 CIA-RDP86-00513R001446330001-9"

"APPROVED FOR RELEASE: 07/19/2001 CIA-RDP86-00513R001446330001-9

28955
S/146/61/004/003/004/013
D217/D301

A semi-conductor device for ...

ASSOCIATION: Leningradskiy elektrotekhnicheskiy institut im. V.I. Ul'yanova (Lenina) (Leningrad Electrotechnical Institute im. V.I. Ul'yanov (Lenin)

SUBMITTED: October 11, 1960

Fig. 2.

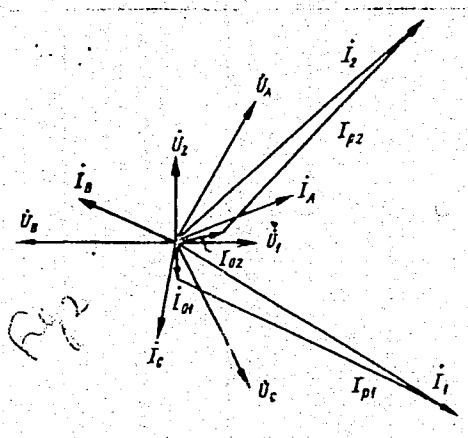

Card 4/4

APPROVED FOR RELEASE: 07/19/2001 CIA-RDP86-00513R001446330001-9"

"APPROVED FOR RELEASE: 07/19/2001 CIA-RDP86-00513R001446330001-9

RYBAK, T.B.M.; KOVATS, Gabor [translator]

Data collecting, data storing and computer automatic systems.
Magy kem lap 19 no. 2: 105-107 F '64.

1. Elliott Automation Ltd. (for Rybak).

APPROVED FOR RELEASE: 07/19/2001 CIA-RDP86-00513R001446330001-9"

"APPROVED FOR RELEASE: 07/19/2001 CIA-RDP86-00513R001446330001-9

RYBAK, V.F.

Terrestrial mollusks in the vicinity of the village of Konchozero and their role in spreading Müller's larvae. Trudy Kar. fil. AN SSSR no.30:92-96 '61. (MIRA 15:9)
(Konchozero region—Mollusks as carriers of disease)
(Konchozero region—Nematoda)

APPROVED FOR RELEASE: 07/19/2001 CIA-RDP86-00513R001446330001-9"

"APPROVED FOR RELEASE: 07/19/2001 CIA-RDP86-00513R001446330001-9

SHUL'MAN, S.S.; RYBAK, V.F.

Changes in the parasite fauna of fishes in Lake Pertozero and Lake Konchozero during a long period of time. Trudy Kar. fil. AN SSSR no.30:24-54 '61. (MIRA 15:9)
(Pertozero, Lake--Parasites--Fishes)
(Konchozero, Lake--Parasites--Fishes)

APPROVED FOR RELEASE: 07/19/2001 CIA-RDP86-00513R001446330001-9"

"APPROVED FOR RELEASE: 07/19/2001 CIA-RDP86-00513R001446330001-9

CAJKA, Josef, inz.; RYBAK, Vladimir, inz.

Compete admittance matrice of a junction transistor at high frequencies. Slaboproudy obzor 21 no.10:631-632 O '60. (EEAI 10:2)
(Transistors)

APPROVED FOR RELEASE: 07/19/2001 CIA-RDP86-00513R001446330001-9"

"APPROVED FOR RELEASE: 07/19/2001 CIA-RDP86-00513R001446330001-9

ACCESSION NR: AT4016405 S/3049/62/000/000/0063/0072

AUTHOR: Glushkov, V. M.; Kovalevskiy, V. A.; Ry*bak, V. I.

TITLE: Universal device for the investigation of image-recognition algorithms

SOURCE: Printsipy* postroyeniya samoobuchayushchikhsya sistem (Principles of construction of self-instructing systems). Sbornik materialov simpoziuma, 1961. Kiev, Gostekhizdat UkrSSR, 1962, 63-72

TOPIC TAGS: cybernetics, character recognition, optical character recognition, image recognition, pattern recognition

ABSTRACT: The authors propose a universal device for the study of image-recognition algorithms, the purpose of which is to introduce information regarding a graphic image (drawing, plan, etc.) into a computer. The device is controlled by the computer, a fact which makes it possible to simulate any kind of scanning of a drawing executed with India ink, printer's ink or pencil on paper. In this case, there is no need to transfer the drawing to the memory of the computer; i.e., to burden the memory with unprocessed information, since it is possible to refer to any point of the drawing at the necessary moment. The device is capable of distinguishing 16 gradations of grayness, thus making it possible to process not only line drawings, but half-tone work as well. The instrument is designed to be used

Card 1/2

APPROVED FOR RELEASE: 07/19/2001 CIA-RDP86-00513R001446330001-9"

"APPROVED FOR RELEASE: 07/19/2001 CIA-RDP86-00513R001446330001-9

ACCESSION NR: AT4016405

with the "Kiev" computer; this universal digital machine operates with a 41-bit code, with a three-address command system and a mean speed of 10,000 mathematical operations per second. The machine, and its subunits, are described in detail in the article. The author reports that a form of the proposed universal device has been in operation since December of 1960, and has been successfully used for the study of (1) the algorithm used in instructing a machine to recognize geometrical figures, (2) the recognition of typewritten digits in the presence of printing defects and (3) the reliability of the automatic reading of graphs. Orig. art. has: 3 figures.

ASSOCIATION: none

SUBMITTED: 00 DATE ACQ: 06Jan64 ENCL: 00

SUB CODE: CP NO REF SOV: 002 OTHER: 006

Card 2/2

APPROVED FOR RELEASE: 07/19/2001 CIA-RDP86-00513R001446330001-9"

"APPROVED FOR RELEASE: 07/19/2001 CIA-RDP86-00513R001446330001-9

ROMOV, A.I.; FISHMAN, Yu.S.; RYBAK, V.I.

Numerical wind forecasting and calculation of geostrophic deviations according to the mean level system. Trudy UkrNIGMI no.43:3-16 '64. (MIRA 18:4)

APPROVED FOR RELEASE: 07/19/2001 CIA-RDP86-00513R001446330001-9"

"APPROVED FOR RELEASE: 07/19/2001 CIA-RDP86-00513R001446330001-9

L 39524-66 EWT(d)/T/EWP(1) IJP(c) BB/GD/GG/GS/JXT(BF)
ACC NR: AT6005571 SOURCE CODE: UR/0000/65/000/000/0082/0090

AUTHOR: Rybak, V. I.

ORG: none

TITLE: Universal apparatus for processing optical information by computers

SOURCE: AN UkrSSR. Chitayushchiye avtomaty i raspoznavaniye obrazov (Reading devices and pattern recognition). Kiev, Naukova dumka, 1965, 82-90

TOPIC TAGS: automatic reader, reading machine

ABSTRACT: An automatic picture reader is briefly described in which the scanning process is program-controlled, i.e., the computer draws information about any spot of the picture whose coordinates the computer specifies. In this system, the picture proper serves as a storage of information, thus relieving the computer storage of the bulk of its load. No intermediate information carrier (tape, punch card) is used. Academician V. M. Glushkov is credited with originating the idea of such a universal apparatus ("Principles of synthesizing self-learning systems," Gostekhizdat UkrSSR, Kiev, 1962). A block diagram of the apparatus is shown and its operation is

Card 1/2

APPROVED FOR RELEASE: 07/19/2001 CIA-RDP86-00513R001446330001-9"

"APPROVED FOR RELEASE: 07/19/2001 CIA-RDP86-00513R001446330001-9

L 39524-66

ACC NR: AT6005571

explained; also, some improvements on the original design are mentioned. The apparatus permitted solving several problems in the development of recognition systems, such as an investigation of a learning algorithm for a geometric-figure recognition, efficiency of the correlation method, using ideal standards for typed-character recognition, etc. Orig. art. has: 1 figure and 1 formula.

SUB CODE: 09 / SUBM DATE: 31Aug65 / ORIG REF: 011 / OTH REF: 003

Card 2/2 vmb

APPROVED FOR RELEASE: 07/19/2001 CIA-RDP86-00513R001446330001-9"

"APPROVED FOR RELEASE: 07/19/2001 CIA-RDP86-00513R001446330001-9

RYBAK, V.I.; SHISHONOK, L.N.

Indicator device for the output of computation results from a machine. Avtom.i prib. no.1:37-40 Ja-Mr '63. (MIRA 16:3)

1. Institut kibernetiki AN UkrSSR.
(Electronic digital computers)

APPROVED FOR RELEASE: 07/19/2001 CIA-RDP86-00513R001446330001-9"

"APPROVED FOR RELEASE: 07/19/2001 CIA-RDP86-00513R001446330001-9

L 34156-65 EXT/EED-2/EWT(d)/TDB(JJ)/T/EWP(1) Pg-4/Pk-4/Po-4/Pq-4 IJP(c)
CG/BB/GS

ACCESSION NR: AT5004751 S/0000/64/000/000/0087/0091

39
B+1

AUTHOR: Rybak, V. I.

TITLE: Apparatus for processing of optical information with the aid of universal computers

SOURCE: AN UkrSSR. Institut kibernetiki. Kibernetika i vychislitel'naya tekhnika (Cybernetics and computer engineering). Kiev, Naukova dumka, 1964, 87-91

TOPIC TAGS: image recognition, character recognition, automatic print reader, optical information processing

KC

ABSTRACT: After briefly discussing several methods used for image scanning for pattern and character recognition studies with the aid of a computer, the article describes a set of devices which make it possible to introduce into the computer, directly from the figure, information concerning any given point on the figure, the

Card 1/4

APPROVED FOR RELEASE: 07/19/2001 CIA-RDP86-00513R001446330001-9"

"APPROVED FOR RELEASE: 07/19/2001 CIA-RDP86-00513R001446330001-9

the coordinates of which are specified by the computer. This eases the burden of the computer memory, since it is not called upon to carry unprocessed information concerning the picture, since the picture itself serves as a memory device, each cell of which can be addressed at any time, in accordance with the program describing the investigated algorithm. A device of this type is the universal setup for the investigation of algorithms for recognition of images, produced by the Institut kibernetiki (Institute of Cybernetics) AN UkrSSR. The device itself was described elsewhere (F. M. Glushkov, Avtomatika, Izd-vo AN UkrSSR,, no. 1, 1962, p. 55), and its block diagram is shown in Fig. 1 of the Enclosure. The operation of the system is described briefly. The figure can be resolved into 256 x 256 spots, and the photomultiplier current corresponding to each spot is amplified, transformed into a four-digit binary code, and transmitted to the arithmetic unit of the computer. By the end of the cycle, the computer receives thus information on the reflection coefficient of a small section of the figure, selected before-

APPROVED FOR RELEASE: 07/19/2001 CIA-RDP86-00513R001446330001-9"

"APPROVED FOR RELEASE: 07/19/2001 CIA-RDP86-00513R001446330001-9

L 34156-65

ACCESSION NR: AT5004751 0

hand by the program. The automatic control of the photomultiplier sensitivity and the errors connected with deviations of this control are discussed. The equipment was used t solve many problems in simulation of algorithms for the recognition of typewritten letters and geometrical figures, and also problems in recognition of standard images and simulation of individual units of an automaton for the realization of a correlation method of image recognition. Orig. art. has: 2 figures and 1 formula.

ASSOCIATION: None

SUBMITTED: 30Sep64 ENCL: 01 SUB CODE: DP

NR REF SOV: 005 OTHER: 002

Card 3/4

APPROVED FOR RELEASE: 07/19/2001 CIA-RDP86-00513R001446330001-9"

"APPROVED FOR RELEASE: 07/19/2001 CIA-RDP86-00513R001446330001-9

L 34156-65

ACCESSION NR: AT5004751 ENCLOSURE: 01

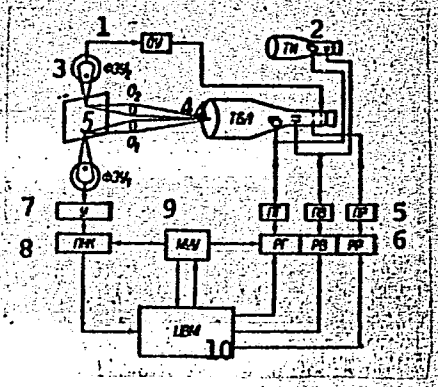

Fig. 1. Block diagram of equipment.

1 - Operational amplifier, 2 - indicator tube, 3 - photomultiplier, 4 - cathode ray tube, 5 - horizontal, vertical, and dimension converters, 6 - horizontal, vertical and dimension registers, 7 - amplifier, 8 - converter, 9 - local control unit, 10 - digital computer, O - objective

Card 4/4

APPROVED FOR RELEASE: 07/19/2001 CIA-RDP86-00513R001446330001-9"

"APPROVED FOR RELEASE: 07/19/2001 CIA-RDP86-00513R001446330001-9

FEDOROVSKAYA, M.F.; RYBAK, V.M.; BATALOVA, F.A.; GRIENKOV, V.G.; IOKTON, B.M.; POTEMKINA, O.N.; SHUVALOVA, A.M.

Results of the treatment of chronic colitis of infectious etiology by means of siphon lavage of the intestine with hypotonic solution of Tambukan mud. Sbor. nauch. rab. vrach san.-kur. uchr. profsoiuzov no.1:136-139 '64. (MIRA 18:10)

1. Yessentukskiy sanatoriy "Kommunist" (glavnyy vrach M.I.Ponomarev).

APPROVED FOR RELEASE: 07/19/2001 CIA-RDP86-00513R001446330001-9"

"APPROVED FOR RELEASE: 07/19/2001 CIA-RDP86-00513R001446330001-9

SANDULOVA, A.V.; RYBAK, V.M.

Anisotropy of the microhardness of silicon. Fiz. tver tela 5 no.9:2587-2590 S '63. (MIRA 16:10)

1. L'vovskiy politekhnicheskiy institut.

APPROVED FOR RELEASE: 07/19/2001 CIA-RDP86-00513R001446330001-9"

"APPROVED FOR RELEASE: 07/19/2001 CIA-RDP86-00513R001446330001-9

SANDULOVA, A.V. [Sandulova, H.V.]; DRONYUK, M.I.; RYBAK, V.M.; SHCHERBAY, K.S.

Diffusion of indium in cuprous oxide. Ukr.fiz.zhur. 7 no.3:289-293 Mr '62. (MIRA 15:7)

1. L'vovskiy politekhnicheskiy institut.
(Diffusion) (Indium) (Cuprous oxide)

APPROVED FOR RELEASE: 07/19/2001 CIA-RDP86-00513R001446330001-9"

"APPROVED FOR RELEASE: 07/19/2001 CIA-RDP86-00513R001446330001-9

SANDULOVA, A.V.; DRONYUK, M.I.; RYBAK, V.M.

Parameters of the diffusion of indium in germanium of different degrees of purity. Fiz.tver.tela 3 no.10:2913-2917 O '61. (MIRA 14:10)

1. L'vovskiy politekhnicheskiy institut.
(Diffusion) (Indium) (Germanium)

APPROVED FOR RELEASE: 07/19/2001 CIA-RDP86-00513R001446330001-9"

"APPROVED FOR RELEASE: 07/19/2001 CIA-RDP86-00513R001446330001-9

29681
S/181/61/003/010/003/036
B102/B108

24.7500 (1144, 1454, 1482)

AUTHORS: Sandulova, A. V., Dronyuk, M. I., and Rybak, V. M.

TITLE: Diffusion of indium into germanium of different degrees of purity

PERIODICAL: Fizika tverdogo tela, v. 3, no. 10, 1961, 2913-2917

TEXT: The authors investigated experimentally the diffusion parameters of In^{114} in dependence on structure and degree of purity of the germanium crystals. Tests were made with mono- and polycrystalline germanium having resistivities of 40, 2.8 and 0.007 ohm·cm. The tracer method combined with successive removal of thin layers was applied. The specimens were mechanically polished and chemically treated plane-parallel plates with n-type conductivity. In^{114} was dissolved in nitric acid and then applied to the Ge surface. The specimens were electrically heated in a pure argon atmosphere. Temperature was kept constant to ± 1°C. The diffusion coefficients were determined and plotted in diagrams ($\log D = f(1/T)$, Figs. 1,2). The respective functions for single crystals (Fig. 1) were

Card 1/13

APPROVED FOR RELEASE: 07/19/2001 CIA-RDP86-00513R001446330001-9"

"APPROVED FOR RELEASE: 07/19/2001 CIA-RDP86-00513R001446330001-9

Diffusion of indium into germanium...

found to be: $D_{40} = 16.37 \exp(-65,600/RT)$ $D_{2.8} = 3.1 \cdot 10^{-2} \exp(-50,900/RT)$ and $D_{0.007} = 2.9 \cdot 10^{-4} \exp(-39,900/RT)$. The subscripts indicate the resistivities. For the polycrystalline specimens (Fig. 2) these functions are $D_{40} = 0.36 \cdot 10^{-7} \exp(-23,200/RT) + 0.26 \exp(-55,600/RT)$ and $D_{0.007} = 0.37 \cdot 10^{-8} \exp(-15,550/RT) + 0.47 \cdot 10^{-3} \exp(-38,300/RT)$. The numerical values of D were between $0.34 \cdot 10^{-13}$ cm^2/sec (700°C, 40 ohm·cm) and $109.70 \cdot 10^{-13}$ cm^2/sec (900°C, 0.007 ohm·cm) for single crystals, and $2.29 \cdot 10^{-13}$ cm^2/sec and $346.80 \cdot 10^{-13}$ cm^2/sec for polycrystals. $\log D = f(\log \varrho)$ were straight lines, the inclination of which decreased with increasing temperature. The salient points of the curves in Fig. 2 indicate that two different diffusion mechanisms take place in polycrystalline samples. The coefficients D_o in the functions $D = D_o \exp(Q/RT)$ and the activation energies Q depend significantly on the resistivity, i.e. on the degree of purity of the specimens; their free-electron concentrations at 300°K were found to be $9.9 \cdot 10^{17}$, $8.1 \cdot 10^{14}$ and $5.6 \cdot 10^{13}$ cm^{-3} for the resistivities 0.007, 2.8 and

APPROVED FOR RELEASE: 07/19/2001 CIA-RDP86-00513R001446330001-9"

"APPROVED FOR RELEASE: 07/19/2001 CIA-RDP86-00513R001446330001-9

Diffusion of indium into germanium...

40 ohm·cm, respectively. Conclusions: (1) The diffusion coefficients depend on the degree of purity of the germanium: the higher the impurity concentration, the higher the diffusion coefficient. (2) The diffusion of indium into germanium takes place via the vacant lattice sites. (3) Indium diffusion into polycrystalline germanium at high temperatures takes place mainly through the crystal grains, at low temperatures mainly along the interfaces. There are 3 figures, 2 tables, and 12 references: 8 Soviet and 4 non-Soviet. The two references to English-language publications read as follows: W. C. Dunlap. Phys. Rev. 86, 4, 615, 1952; 94, 6, 1531, 1954; C. S. Fuller. Phys. Rev., 86, 1, 186, 1952.

ASSOCIATION: L'vovskiy politekhnicheskiy institut (L'vov Polytechnic Institute)

SUBMITTED: March 13, 1961

Card 3/3

APPROVED FOR RELEASE: 07/19/2001 CIA-RDP86-00513R001446330001-9"

"APPROVED FOR RELEASE: 07/19/2001 CIA-RDP86-00513R001446330001-9

RYBAK, V. I.; GLUSHKOV, V.M. and KOVALEVSKIY, V.A.

"Concerning One Algorithm in Teaching to Recognize Shapes."

Report submitted for the Symposium on Principles in the Design of Self-Learning Systems, Kiev Ukr SSR, 5-9 May 1961

APPROVED FOR RELEASE: 07/19/2001 CIA-RDP86-00513R001446330001-9"

"APPROVED FOR RELEASE: 07/19/2001 CIA-RDP86-00513R001446330001-9

SLUTSKIN, N.I.; RYBAK, V.I., red.

[Physiological mechanism of the action of medicaments on the "similarity principle" (similia similibus curentur) in the light of the biological interference theory; scientific concept of "the natural physiological measure to fight a disease" as adopted by homeopathy] Fiziologicheskii mekhanizm deistviia lekarstvennykh veshchestv po "printsipu podobiia" (Similia similibus curentur) v svete teorii biologicheskoi interferentsii; "O prirodnoi fiziologicheskoi mere protiv bolezni," ispol'zuemoi gomeopatiei (nauchnaia kontseptsiia). Pod red. V.I.Rybaka. Moskva, TSentr. gomeopaticheskaia poliklinika Mosoblzdravotdela, 1961. 12 p. (MIRA 15:3)

1. Glavnyy vrach tsentral'noy gomeopaticheskoy polikliniki Moskovskogo oblastnogo otdela zdravookhraneniya i Predsedatel' Moskovskogo Nauchno-meditsinskogo Obshchestva vracheygomeopatov (for Rybak). (HOMEOPATHY)

APPROVED FOR RELEASE: 07/19/2001 CIA-RDP86-00513R001446330001-9"

"APPROVED FOR RELEASE: 07/19/2001 CIA-RDP86-00513R001446330001-9

SLUTSKIN, Naum Izrailevich; RYBAK, Vasiliy Ivanovich, red.

[Discorrelational-trophic determinative theory of cancer; dystrophic syndromes] Diskorreliatsionno-troficheskaia determinatsionnaia teoriia rakovoi bolezni; distroficheskie sindromy. Pod red. V.I.Rybaka. Moskva, 1961. 71 p.
(CANCER RESEARCH) (MIRA 15:2)

APPROVED FOR RELEASE: 07/19/2001 CIA-RDP86-00513R001446330001-9"

"APPROVED FOR RELEASE: 07/19/2001 CIA-RDP86-00513R001446330001-9

ACCESSION NR: AT4016401 S/3049/62/000/000/0005/0018

AUTHOR: Glushkov, V. M.; Kovalevskiy, V. A.; Ry*bak, V. I.

TITLE: An algorithm for teaching a machine to recognize the simplest kind of geometric figures

SOURCE: Printsipy* postroyeniya samoobuchayushchikhsya sistem (Principles of construction of self-instructing systems). Sbornik materialov simpoziuma, 1961. Kiev, Gostekhizdat UkrSSR, 1962, 5-18

TOPIC TAGS: artificial intelligence, learning, self improving machine, cybernetics, perception, character recognition, pattern recognition

ABSTRACT: In this work there is a description of an algorithm for teaching a universal computer the recognition of the representation of several of the simplest geometrical configurations, regardless of their size and position in the field of vision. The distinguishing features of the figures are the directions of the contour lines. The drawing is characterized by a set of numbers, each of which is proportional to the number of points of the contour in a given direction. In recognition, a calculation is made of the correlation of these numbers with standard sets which describe certain "averaged" (normalized) figures. The drawing refers to a particular class of figures depending on that standard

Card 1/2

APPROVED FOR RELEASE: 07/19/2001 CIA-RDP86-00513R001446330001-9"

"APPROVED FOR RELEASE: 07/19/2001 CIA-RDP86-00513R001446330001-9

ACCESSION NR: AT4016401

with which maximum correlation is achieved. Although this method of describing figures does not permit correct recognition of all geometric configurations, its advantage resides in its invariability with respect to consecutive shifting of the figures. The instruction consists in the automatic determination of the standards which provide the most correct recognition of the figures. The standards are calculated by averaging the sets of directions of all the drawings used in the instruction. During the instruction phase, the class, to which a given drawing relates, is indicated by the human agent. The authors point out that, in line with the special terminology adopted by certain investigators, the algorithm described in this paper might be imagined as a two-stage perceptron. The equipment used in the experimental studies, which were made with the "Kiev" general-purpose computer, is described. The results of these tests are discussed. Orig. art. has: 6 figures.

ASSOCIATION: None

SUBMITTED: 00 DATE ACQ: 06Jan64 ENCL: 00

SUB CODE: CP NO REF SOV: 001 OTHER: 003

Card 2/2

APPROVED FOR RELEASE: 07/19/2001 CIA-RDP86-00513R001446330001-9"

"APPROVED FOR RELEASE: 07/19/2001 CIA-RDP86-00513R001446330001-9

MUKHIN, S.A., doktor; RYBAK, V.I., red.

[Some problems in the homeopathic treatment of heart diseases; a new approach in the treatment of myocardial infarcts] O nekotorykh voprosakh gomeopaticheskogo lecheniia boleznei serdtsa; o novom podkhode v lechenii infarktov miokarda. Pod red. V.I.Rybaka. Moskva, Mosk.nauchno-med.ob-vo vrachei-gomeopatov, 1961. 41 p. (MIRA 15:4)

1. Starshiy konsul'tant TSentral'noy gomeopaticheskoy poliKliniki Mosoblzdarvotdela (for Mukhin). 2. Predsedatel' Moskovskogo meditsinskogo obshchestva vrachey-gomeopatov, glavnyy vrach TSentral'noy gomeopaticheskoy polikliniki Mosoblzdrazotdela (for Rybak).
(HEART--DISEASES--HOMEOPATHIC TREATMENT)
(HEART--INFARCTION)

APPROVED FOR RELEASE: 07/19/2001 CIA-RDP86-00513R001446330001-9"

"APPROVED FOR RELEASE: 07/19/2001 CIA-RDP86-00513R001446330001-9

1ST AND 2ND ORDERS

PROCESSES AND PROPERTIES INDEX

3RD AND 4TH ORDERS

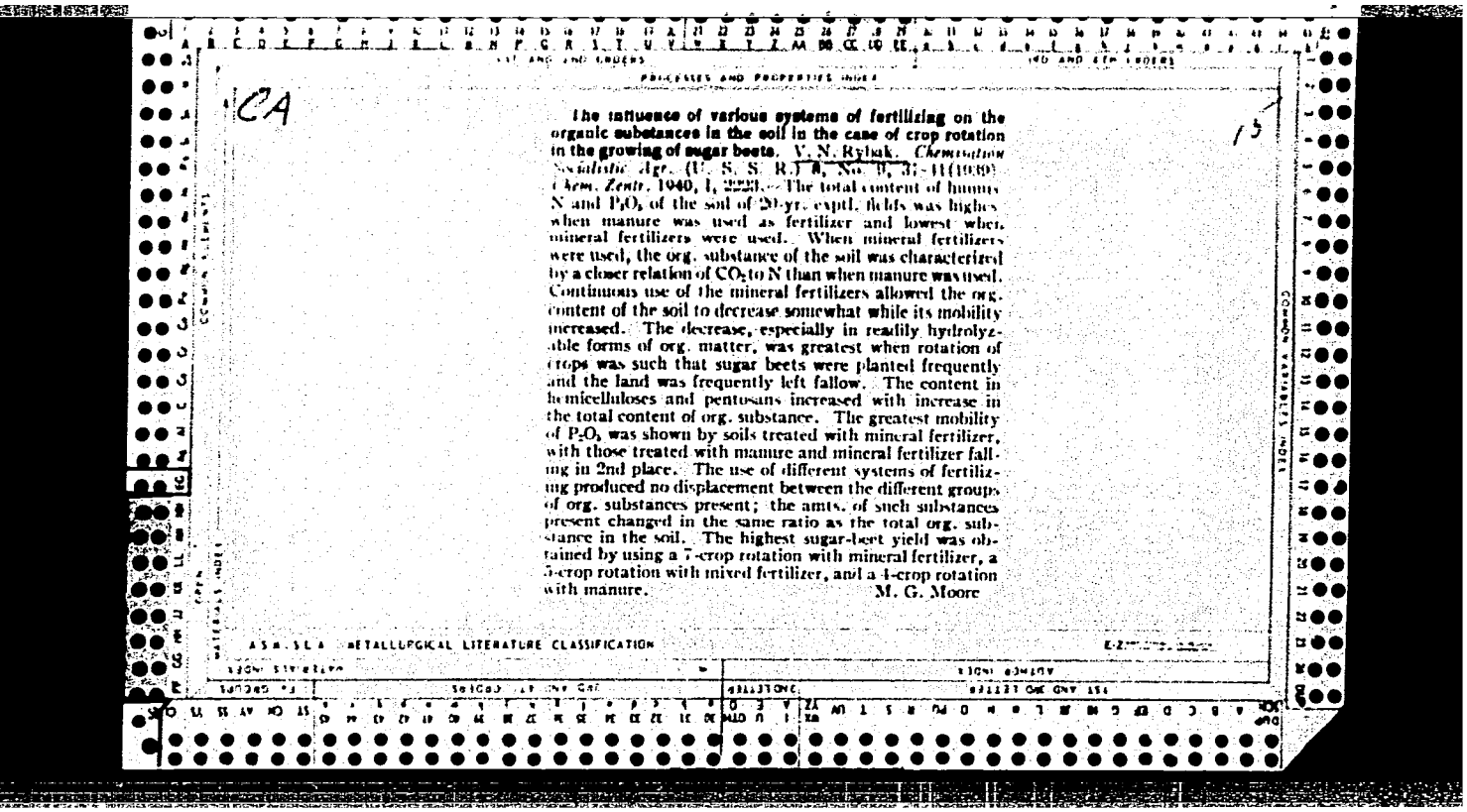

CA

15

The influence of various systems of fertilizing on the organic substances in the soil in the case of crop rotation in the growing of sugar beets. V. N. Rybak. *Chemisation Socialistic Agr.* (U. S. S. R.) 8, No. 9, 37-41(1939). *Chem. Zentr.* 1940, I, 2223.—The total content of humus N and P_2O_5 of the soil of 20-yr. exptl. fields was highest when manure was used as fertilizer and lowest when mineral fertilizers were used. When mineral fertilizers were used, the org. substance of the soil was characterized by a closer relation of CO_2 to N than when manure was used. Continuous use of the mineral fertilizers allowed the org. content of the soil to decrease somewhat while its mobility increased. The decrease, especially in readily hydrolyzable forms of org. matter, was greatest when rotation of crops was such that sugar beets were planted frequently and the land was frequently left fallow. The content in hemicelluloses and pentosans increased with increase in the total content of org. substance. The greatest mobility of P_2O_5 was shown by soils treated with mineral fertilizer, with those treated with manure and mineral fertilizer falling in 2nd place. The use of different systems of fertilizing produced no displacement between the different groups of org. substances present; the amts. of such substances present changed in the same ratio as the total org. substance in the soil. The highest sugar-beet yield was obtained by using a 7-crop rotation with mineral fertilizer, a 5-crop rotation with mixed fertilizer, and a 4-crop rotation with manure.

M. G. Moore

ASM-SLA METALLURGICAL LITERATURE CLASSIFICATION

APPROVED FOR RELEASE: 07/19/2001 CIA-RDP86-00513R001446330001-9"

"APPROVED FOR RELEASE: 07/19/2001 CIA-RDP86-00513R001446330001-9

KAVUN, Vasiliy Mikhaylovich. Prinimali uchastiye: BABSKIY, I.I.; BOROVSKIY, V.A.; VITKOVSKIY, M.P.; ZIMOVETS, V.N.; SEREDENKO, B.N.; PITUL'KO, V.Ye.; CHEPURNOV, I.A.; BLAZHEVSKIY, V.K.; YAROPUD, V.N.; RYBAK, V.N.; KUZIK, G.I.; ZADNEPRYANETS, G.V.; IVANOV, A.N., red.; BELOVA, N.N., tekhn. red.

[Efficient farm management] Ratsional'noe vedenie khoziaistva. Moskva, Sel'khozizdat, 1963. 205 p. (MIRA 16:4)

1. Ukrainskiy nauchno-issledovatel'skiy institut ekonomiki i organizatsii sel'skogo khozyaystva (for Babskiy, Borovskiy, Vitkovskiy, Zimovets, Seredenko, Pitul'ko, Chepurnov). 2. Vinnitskaya gosudarstvennaya sel'skokhozyaystvennaya opytnaya stantsiya (for Blazhevskiy, Yaropud). 3. Ukrainskiy nauchno-issledovatel'skiy institut zemledeliya (for Rybak). 4. Sekretar' partiynoy organizatsii kolkhoza imeni XXII s"yezda Kommunisticheskoy partii Sovetskogo Soyuza (for Kuzik). 5. Glavnyy agronom kolkhoza imeni XXII s"yezda Kommunisticheskoy partii Sovetskogo Soyuza (for Zadnepryanets).
(Collective farms—Management)

APPROVED FOR RELEASE: 07/19/2001 CIA-RDP86-00513R001446330001-9"

"APPROVED FOR RELEASE: 07/19/2001 CIA-RDP86-00513R001446330001-9

LOZENKO, V.T.; GOLOMBA, R.A., nauchnyy sotrudnik; OS'MAK N.K., nauchnyy sotrudnik; RYBAK, V.N., nauchnyy sotrudnik

Development of communal economy and agricultural standards on the Lenin Collective Farm. Zemledelie 8 no.1:19-25 Ja '60. (MIRA 13:4)

1. Predsedatel' kolkhoza imeni Lenina, Borodyanskogo rayona, kiyevskoy oblasti (for Lozenko). 2. Ukrainskiy nauchno-issledovatel'skiy institut zemledeliya (for Golomba, Os'mak, Rybak).

(Borodyanka District--Collective farms)

APPROVED FOR RELEASE: 07/19/2001 CIA-RDP86-00513R001446330001-9"

"APPROVED FOR RELEASE: 07/19/2001 CIA-RDP86-00513R001446330001-9

RYBAK, V.N., kand.sel'skokhozyaystvennykh nauk; SKORINA, S.A.

First results of a soil survey in the Ukraine. Zemledelie 6 no.9: 86-90 S '58. (MIRA 11:9)
(Ukraine--Crops and soils)

APPROVED FOR RELEASE: 07/19/2001 CIA-RDP86-00513R001446330001-9"

"APPROVED FOR RELEASE: 07/19/2001 CIA-RDP86-00513R001446330001-9

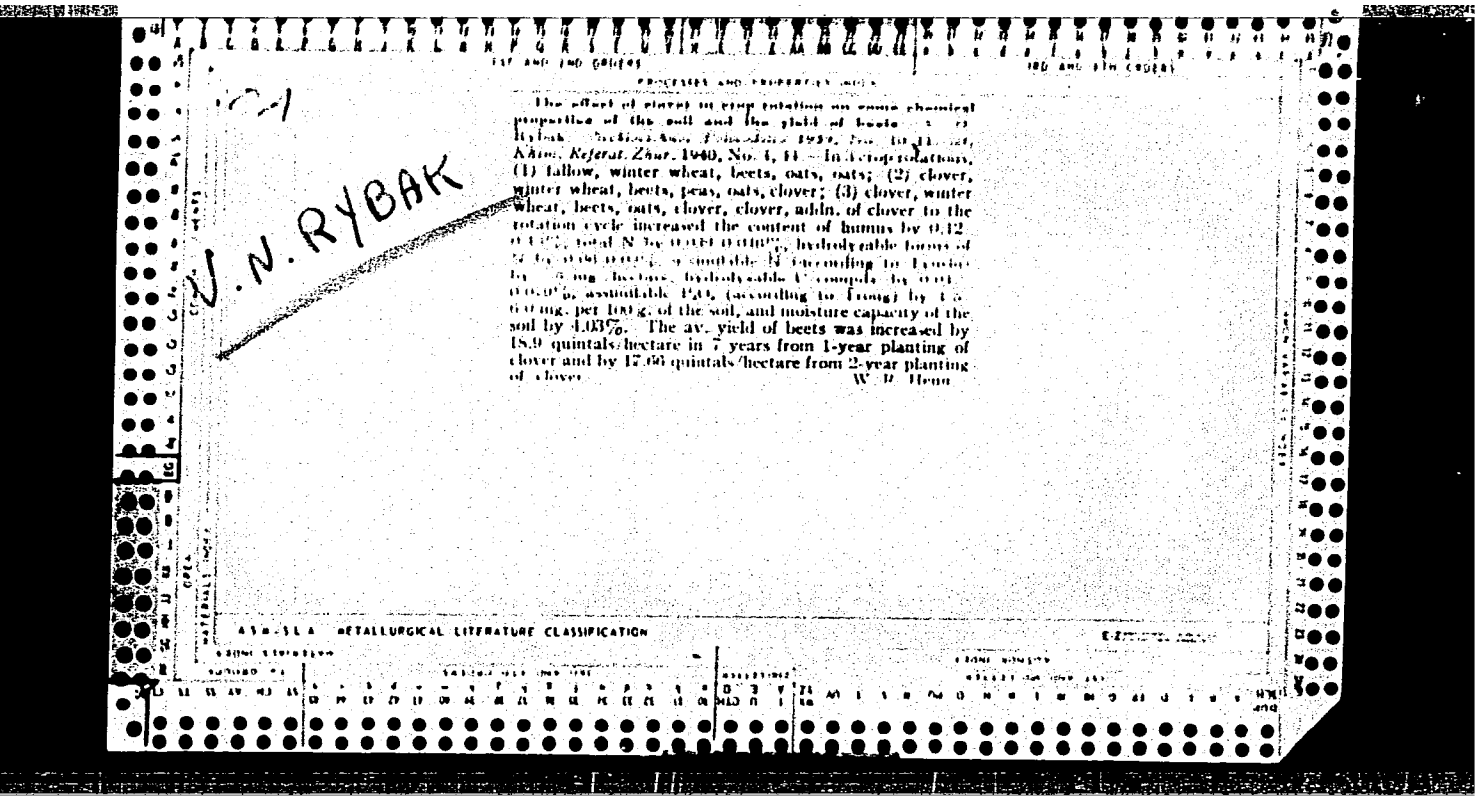

1ST AND 2ND ORDERS

3RD AND 4TH ORDERS

PROCESSES AND PROPERTIES INDEX

The effect of clover in crop rotation on some chemical properties of the soil and the yield of beets. [illegible] Rybak. [illegible] 1939, No. [illegible] Khim. Referat. Zhur. 1940, No. 4, 11.—In 3 crop rotations, (1) fallow, winter wheat, beets, oats, oats; (2) clover, winter wheat, beets, peas, oats, clover; (3) clover, winter wheat, beets, oats, clover, clover, addn. of clover to the rotation cycle increased the content of humus by 0.12-[illegible], total N by [illegible], hydrolyzable forms of N by [illegible], assimilable N (according to [illegible]) by [illegible] mg./hectare, hydrolyzable C compds. by [illegible], assimilable P_2O_5 (according to Trong) by [illegible] mg. per 100 g. of the soil, and moisture capacity of the soil by 4.03%. The av. yield of beets was increased by 18.9 quintals/hectare in 7 years from 1-year planting of clover and by 17.66 quintals/hectare from 2-year planting of clover. W. R. Henn

V. N. RYBAK

ASM-SLA METALLURGICAL LITERATURE CLASSIFICATION

APPROVED FOR RELEASE: 07/19/2001 CIA-RDP86-00513R001446330001-9"

"APPROVED FOR RELEASE: 07/19/2001 CIA-RDP86-00513R001446330001-9

RYBAK, W.

On the eve of the district agricultural exhibitions. p. 4.

ROLNIK SPOŁDZIELCA. (Centrala Rolniczej Spółdzielni "Samopomoc Chłopska") Warszawa, Poland. Vol. 8, no. 33, Aug. 1955.

Monthly list of East European Accessions (EEAI) LC, Vol. 9, no. 2, Feb. 1960

Uncl.

APPROVED FOR RELEASE: 07/19/2001 CIA-RDP86-00513R001446330001-9"

"APPROVED FOR RELEASE: 07/19/2001 CIA-RDP86-00513R001446330001-9

COUNTRY : Poland
CATEGORY : H-13

ABS. JOUR. : RZKhim., No. 16 1959, No. 57852

AUTHOR : Rybak, W.
INST. : Not given
TITLE : The Calculation of Heat Balances for Glass-Melting Tanks

ORIG. PUB. : Szkło i Ceram, 9, No 11, 309-314 (1958)

ABSTRACT : The author describes in detail a method for the calculation of heat balances for regenerative 2-burner glass-melting tanks. The method was developed at the glass-making plant of the Institute of the Polish Glass and Ceramics Industry. An analysis of the entries in the balance is given together with methods for the computation and measurement of the quantities required for the determination of the heating value of the fuel, the amount and temperature of the producer gas

CARD: 1/2

APPROVED FOR RELEASE: 07/19/2001 CIA-RDP86-00513R001446330001-9"

"APPROVED FOR RELEASE: 07/19/2001 CIA-RDP86-00513R001446330001-9

KUCHARSKI, Jozef; BICZYSKO, Jan; RYBAK, Witold; HAMAN, Waldemar

Dephenolization of effluents on the tower trickling filters. (A semi-technical installation). Przem chem 40 no.11:656-659 N '61.

1. Instytut Chemii Ogolnej, Warszawa.

APPROVED FOR RELEASE: 07/19/2001 CIA-RDP86-00513R001446330001-9"

"APPROVED FOR RELEASE: 07/19/2001 CIA-RDP86-00513R001446330001-9

RYBAK, W.

RYBAK, W. At the fair in Jarocin. p. 4. Vol. 9, no. 12, Mar. 1956.
ROLNIK SPOLDZIELCA. Warszawa, Poland.

SOURCE: East European Accessions List (EEAL) Vol. 6, No. 4--April 1957

APPROVED FOR RELEASE: 07/19/2001 CIA-RDP86-00513R001446330001-9"

"APPROVED FOR RELEASE: 07/19/2001 CIA-RDP86-00513R001446330001-9

MULLO, Ivan Mikhaylovich; RYBAK, Ye.D., red.; POD"YEL'SKAYA, K.M., tekhn.red.

[Medvezh'yegorsk; concise regional and historical study of the city and district] Medvezh'egorsk; kratkii istoriko-kraevedcheskii ocherk o gorode i raione. Petrozavodsk, Gos.izd-vo Karel'skoi ASSR, 1959. 96 p. (MIRA 13:12)
(Medvezh'yegorsk District)

APPROVED FOR RELEASE: 07/19/2001 CIA-RDP86-00513R001446330001-9"

"APPROVED FOR RELEASE: 07/19/2001 CIA-RDP86-00513R001446330001-9

S/120/63/000/001/063/072
E032/E314

AUTHORS: Durasova, Yu.A. and Rybak, Ye.N.

TITLE: Apparatus for determination of the thickness of thin films

PERIODICAL: Pribory i tekhnika eksperimenta, no. 1, 1963, 195 - 196

TEXT: This device can be used to determine the thickness of thin films in the range 80 - 5 000 Å to an accuracy of ± 10 - 15 Å. A glass fibre, 20 - 50 μ in diameter, is placed in contact with the base on which the film is deposited. The assembly is then exposed to the evaporating material. After the film has been deposited the glass fibre is removed, leaving a groove whose depth is equal to the thickness of the film. The surface is then covered with a 500 Å thick layer of silver, and the plate is used in conjunction with another plate, covered with a 100 - 150 Å thick silver layer, to form an optical wedge. The monochromatic wedge fringes are recorded photographically and evaluated, as described by Tolansky (Uspekhi fiz. nauk, 1946, 30, 1-2).

Card 1/2

APPROVED FOR RELEASE: 07/19/2001 CIA-RDP86-00513R001446330001-9"

"APPROVED FOR RELEASE: 07/19/2001 CIA-RDP86-00513R001446330001-9

S/120/63/000/001/063/072
E032/E314

Apparatus for ....

ASSOCIATION: Fizicheskiy fakul'tet MGU
(Physics Department of MGU)

SUBMITTED: April 4, 1962

Card 2/2

APPROVED FOR RELEASE: 07/19/2001 CIA-RDP86-00513R001446330001-9"

"APPROVED FOR RELEASE: 07/19/2001 CIA-RDP86-00513R001446330001-9

DURASOVA, Yu.A.; RYBAK, Ye.N.

Apparatus for measuring the thickness of thin films. Prib. i tekh. eksp. 8 no.1:195-196 Ja-F '63. (MIRA 16:5)

1. Fizicheskiy fakul'tet Moskovskogo gosudarstvennogo universiteta.
(Metallic films--Measurement)

APPROVED FOR RELEASE: 07/19/2001 CIA-RDP86-00513R001446330001-9"

"APPROVED FOR RELEASE: 07/19/2001 CIA-RDP86-00513R001446330001-9

TELESNIN, R.V.; SARAYEVA, I.M.; RYBAK, Ye.N.; SHISHKOV, A.G.

Contributions to the induced anisotropy of thin iron-nickel films. Izv. AN SSSR. Ser.fiz. 30 no.1:95-98 Ja '66.
(MIRA 19:1)

1. Fizicheskiy fakul'tet Moskovskogo gosudarstvennogo universiteta im. M.V.Lomonosova.

APPROVED FOR RELEASE: 07/19/2001 CIA-RDP86-00513R001446330001-9"

"APPROVED FOR RELEASE: 07/19/2001 CIA-RDP86-00513R001446330001-9

RYBAK, Yu.M., inzh.-kapitan 1-go ranga; SHAROV, M.F., inzh.-podpolkovnik; TOMCHIY, V.S., inzh.-kapitan 3-go ranga

The production of large-scale chemistry for shipbuilding. Mor. stor. 17 no.4:66-72 Ap '64. (MIRA 18:7)

APPROVED FOR RELEASE: 07/19/2001 CIA-RDP86-00513R001446330001-9"

"APPROVED FOR RELEASE: 07/19/2001 CIA-RDP86-00513R001446330001-9

RYBAK, Z.

10th Anniversary Conference of the Scientific-Technical Association of Engineers and Technicians of the Petroleum Industry; a report. p. 13. (Nafta, Vol. 13, No. 1. Jan 1957, Krakow, Poland)

SO: Monthly List of East European Accessions (EEAL) LC, Vol. 6, No. 8, Aug 1957. Uncl.

APPROVED FOR RELEASE: 07/19/2001 CIA-RDP86-00513R001446330001-9"