ACC NR: AP6035094 SOURCE CODE: UR/0431/66/001/004/0217/0221

AUTHOR: Kocharyan, N. M.; Pachadzhyan, Kh. B.; Mkhitaryan, Sh. A.

ORG: Central Scientific Physicotechnical Laboartory, Academy of Sciences ArmSSR (TsNI fiziko-tekhnicheskaya laboratoriya AN ArmSSR)

TITLE: Piezoelectric effect in polyvinyl chloride

SOURCE: AN ArmSSR. Izvestiya. Fizika, v. 1, no. 4, 1966, 217-221

TOPIC TAGS: piezoelectric effect, polyvinyl chloride, polarization, polarization effect

ABSTRACT: Results of an investigation of the piezoelectric effect in polyvinyl-chloride (PVC) are presented. The best results were derived during a polarization lasting 3 to 5 hours. The maximum piezomodule obtained equals 4×10^{-8} CGSE. The piezomodule was measured by the static method. Data on the lifetime of the piezoelectric property in PVC are discussed. The authors express their gratitude to I. S. Rez for disucssion of results, and to F. Shakaryan for valuable help in carrying out the work. Orig. art. has: 1 figure. [GC]

SUB CODE: 07, 20/ SUBM DATE: 05Nov65/ ORIG REF: 002/ OTH REF: 003/

Card 1/1

AMBARTSUMYAN, M.S.; MKHITARYAN, T.Kh. (Leninakan)

Efforts to lower the general level of disease and injury incidence in a shoe factory. Fel'd. i akush. 26 no.8:56-58 Ag '61. (MIRA 14:10)

(SHOE INDUSTRY--HYGIENIC ASPECTS)

High molecular complex esters of organic ortho acids

I. V. G. Mikhitaryan. *J Gen Chem* 1 8 8 R 1 8, 1301 8(1938) Heating $HC(OEt)_3$ I with menthol and borneol leads to the exchange of 1, 2 and 3 alkoxy groups in I and the formation of corresponding orthoformates with like and unlike alkyl groups The substitution is accelerated in the presence of p $MeC_6H_4SO_3H$ The reaction mixts are heated in an oil bath until the liberated EtOH is driven off and the residue is fractionated at reduced pressure Thus, an equimol mixt of *l* menthol and I gave *l-menthyl di Et orthoformate* II, bₚ 145 40°, d_4^{20} 0 9252, n_D^{20} 1 4440, $[\alpha]_D^{20}$ [illegible] M R p 74 21, and the *l-dimenthyl Et ester* III, bₚ 105 [illegible], d_4^{20} 0 9342, n_D^{20} 1 4631, $[\alpha]_D^{20}$ 116 74, M R p 108 08 A mixt of 15 g I and 18 9 g *dl*-menthol yielded 9 2 g of optically inactive II, bₚ 146 [illegible], d_4^{20} 0 9218, n_D^{20} 1 4444 and [illegible] g III, bₚ 2[illegible], d_4^{20} 0 9270, n_D^{20} 1 4617 In the presence of 0 05 g of the catalyst there were formed 7 g II and 1 4 g III I with 1 5 mols *l*-menthol gave II, III and *l-trimenthyl orthoformate* IV, m 1 5 2°, $[\alpha]_D^{20}$ 133 [illegible] *dl*-Menthol gave inactive II, III and IV, m 130 I 38 4 g and 40 g borneol, m 204°, $[\alpha]_D^{20}$ 13 05°, gave 18 g *borneodimenthyl orthoformate*, bₚ 132 4°, d_4^{20} 0 9624, n_D^{20} 1 4561, 12 g *dibornyl Et ester*, bₚ 192 4°, and [illegible] *borneyl ester*, m 231 4° All these esters are easily hydrolyzed by 5% H_2SO_4 with separ of menthol and borneol, resp, but resist the action of boiling 5% KOH On heating and exposure to the daylight II is converted to III and this to IV The corresponding bornyl esters act similarly

Chas Blanc

PROCESSES AND PROPERTIES INDEX

Catalytic effect of p-toluenesulfonic acid on the reaction of acetals with pentaerythritol. V. G. Mikhitaryan. *J Gen. Chem.* (U. S. S. R.) 9, 1923-5(1939); cf. *C. A.* 33, 4222[9].—By using small amts. of p-MeC$_6$H$_4$SO$_3$H (I), pentaerythritol (II) and acetals readily react to give good yields of the diacetals of II, with no admixt. of the monoacetals. Boiling a mixt. of 10 g. PrCHO, 0.05 g. I and 4.5 g. II for 3 hrs. (complete disappearance of II) gave 7 g. *dibutylidenepentaerythritol*, m. 60.5°. *Dissoamylidenepentaerythritol*, prepd. in the same manner, m. 110-12°. From 15.2 g. chloroacetal, 0.06 g. I, and 0.65 g. II, there was obtained 12 g. *bis(2-chloroethylidene)pentaerythritol*, m. 91.8°. H. Priestley

ASM SLA METALLURGICAL LITERATURE CLASSIFICATION

Synthesis of alkyl ethylene orthoformates. V. G. Mikhitaryan. *J. Gen. Chem.* (U. S. S. R.) 10, 667-9 (1940); *C. C. A.* 35, 4222[8]. In continuation of previous studies, 59.2 g. (0.4 g.-mol.) $HC(OC_2H_5)_3$ was treated with 24.8 g. (0.4 g.-mol.) glycol in the presence of 0.05 g. *p*-toluenesulfonic acid (I) with the formation of 18 g. (37.8%) $O.CH_2.CH_2.O.CHOEt$ (II), b. 120-3°, d_4^{20} 1.053, n_D^{20} 1.4108. On reaction with 1 mole menthol and borneol, resp., in the presence of I the ethoxy group in II was replaced by the menthyloxy and bornyloxy group, resp., with the formation of *2-(menthyloxy)-1,3-dioxolane*, m. 34.2°, α_D^{20} +73.03°, and *2-(bornyloxy)-1,3-dioxolane*, b_{14} 148-52°, d_4^{20} 1.0496, n_D^{20} 1.4720. Gertrude Berend

Lab. of Biochemistry, Yerevan Med. Inst., Acad. of Sci. AS USSR

METALLURGICAL LITERATURE CLASSIFICATION

BUNYATYAN, G.Kh.; MKHITARYAN, V.G.

Importance of oxypurines in adrenaline metabolism [with summary in English]. Izv.AN Arm.SSR.Est.nauki no.4:89-96 '47. (MLRA 9:8)

1. Deystvitel'nyy chlen AN Armyanskoy SSR. (for Bunyatyan);
2. Biokhimicheskiy sektor instituta fiziologii AN Armyanskoy SSR.
(Purine) (Adrenaline)

11-A

C.A.

Effect of nicotinic acid on oxidation of pyrocatechol

G. Kh. Bunyatyan, V. G. Mkhitaryan, and V. R. Egiyan. Erevan Med. Inst., Erevan. Doklady Akad. Nauk Armyan. SSR 7, No. 1, 27-31 (1947). Warburg technique was applied to oxidation of pyrocatechol in Ringer soln. or phosphate buffers at 40°. At pH 6.5 nicotinic acid does, or in the presence of Cu or Fe ions retards the oxidation rate very significantly. At pH 7.4 Fe shows the stronger oxidizing action, while at pH 6.5 Cu is more active in phosphate buffers. In Ringer soln. Fe retards oxidation while Cu has no effect. Here nicotinic acid has no effect if Fe is present. G. M. Kosolapoff

BUNYATYAN, G.Kh.; MKHITARYAN, V.G.

Participation of oxypurines in adrenaline metabolism. Report no. 2: Effect of uric acid on adrenaline oxidation. Nauch. trudy Inst. fiziol. AN Arm.SSR. 1:49-57 '48. (MLRA 9:8)

(URIC ACID) (ADRENALINE)

BUNYATYAN, G.Kr.; MKHITARYAN, V.G.; YEGIYAN, V.B.

Participation of oxypurines in ascorbic acid metabolism. Report no. 4: Effect of uric acid on the oxidation of ascorbic acid in the presence of hydrogen peroxide. Nauch. trudy Inst.fiziol.AN Arm.SSR. 1:59-72 '48. (MLRA 9:8)

(URIC ACID) (ASCORBIC ACID) (HYDROGEN PEROXIDE)

1ST AND 2ND ORDERS

PROCESSES AND PROPERTIES INDEX

3RD AND 4TH ORDERS

CA

17

Action of uric acid on the oxidation of adrenaline. G. Kh. Bunyatyan and V. G. Mikhitaryan (Armenian Acad. Sci., U.S.S.R.). *Biokhimiya* 13, 225-7(1948).—It had previously been shown that hypoxanthine, xanthine, and uric acid are antioxidants for ascorbic acid. Phenolic compds. are also protected from oxidation by hydroxyquinone. The oxidation of catechol in phosphate buffer at pH 6.8 and 7.4 and in Ringer soln. is checked by uric acid, either in the presence or absence of Fe and Cu. Uric acid serves as an antioxidant for adrenaline in phosphate buffer, and in Ringer soln., even in the presence of Cu. The antioxidant effect of uric acid on adrenaline in the presence of Fe is maintained only in phosphate buffer soln. but not in Ringer soln., where the oxidation is greater than when Fe alone is present. H. Priestley

METALLURGICAL LITERATURE CLASSIFICATION

MKHITARYAN, V.G.

BUNYATYAN, G.Kh.; MKHITARYAN, V.G.; YEGIYAN, V.B.

Participation of oxypurines in adrenaline exchange. Part 3. Effect of oxypurines on the oxidation of pyrocatechin and adrenaline in the presence of phenolase. Dokl.AN Arm.SSR 10 no.4:167-171 '49. (MLRA 9:10)

1.Deystvitel'nyy chlen Akademii nauk Armyanskoy SSR (for Bunyatyan).
2.Institut fiziologii Akademii nauk Armyanskoy SSR, Yerevan.
(Phenolases) (Purines) (Adrenaline) (Pyrocatechol)

MKHITARYAN, V.G.; YEGIYAN, V.B.

Effect of choline and colamine on the oxidation of adrenaline.
Dokl.AN Arm.SSR. 11 no.1:19-23 '49. (MLRA 9:10)

1. Kafedra biokhimii Yerevanskogo Meditsinskogo insitututa, Yerevan. Predstavleno G.Kh. Bunyatyanom.
(ADRENALINE) (CHOLINE) (ETHANOL)

MKHITARYAN, V. G.

USSR/Medicine, Biology - Antioxidants, Jul/Aug 53
Ascorbic Acid

"The Action of 4-Methyluracyl (I) and of 4-Methyl-2-Thiouracyl (II) on the Process of Oxidation of Ascorbic Acid (III)," V. G. Mkhitaryan, E. A. Avakimova, S. G. Shchukuryan, Sci-Res Inst of Roentgenol and Oncol, Min of Health, Armenian SSR (Yerevan)

Vop Pit, Vol 12, No 4, pp 24-28

It has been established that both thiamine and purine derivs inhibit the oxidation of III. I and II also have this effect. The antioxidant action of II is stronger than that of I, and is exhibited both in the presence and absence of Fe or Cu ions.

269T38

MKHITARYAN, V. G.

4

V. Action of some derivatives of rubeanic in the oxidation of pyrocatechol. V. O. Mkhitaryan, S. G. Shahnazyan, and E. A. Antonyan. Izvestiya Akad. Nauk Armyan. S.S.R. IV, No. 3, 81-6(1953)(in Russian).—4-Methyl-2-thiourach (I) in phosphate buffer at pH 7.33 strongly inhibits the oxidation of pyrocatechol (II) either in the presence or the absence of Cu^{++} or Fe^{+++} ions. In phosphate buffer at pH 6.4 I alone or in the presence of Cu^{++} ion strongly inhibits the oxidation of II, but it does not inhibit the oxidation in presence of Fe^{+++} ion. 4-Methyl-

CH

urach (III) in phosphate buffer at pH 7.33 weakly inhibits the oxidation of II, but it shows little influence on the oxidation in the presence of Fe^{+++} and Cu^{++} ions. In a phosphate buffer at pH 6.37 III does not inhibit the oxidation of II alone or in the presence of Fe^{+++} ion, but it does inhibit in the presence of Cu^{++} ion. The tests were carried out with II which had been twice-recrystd. from phosphate buffer at pH 7.2 and pH 6.4. The oxidation of II is measured manometrically by the quantity of O consumed in a Warburg app. at 37°. In the Warburg respirometer were used 3.3-ml. samples (7 mg. II in 1 ml. soln., 5 mg. I in 2.1 ml. of soln., and 0.2 ml. 30% KOH). In the tests with Cu and Fe ions (used as their sulfates), 3.1-ml. samples contg. 0.3 mg. Fe (0.06 ml.) or 0.003 mg. Cu (0.06 ml.) were employed.

F. S. Holg

2

MKHITARYAN, V.G.; AVAKIMOVA, E.A.; SHUKURYAN, S.G.

Clinical significance of the correlation between the activity of carbonic anhydrase in the blood and gastric juice acidity. Lab. delo no.1:12-14 Jan-Feb. '55. (MLRA 8:8)

1. Iz biokhimicheskoy laboratorii Nauchno-issledovatel'skogo instituta rentgenologii i onkologii Ministerstva Zdravookhraneniya Armyanskoy SSR (dir.-prof. V.A. Fanardzhyan)

(GASTRIC JUICE,
acidity, relation to blood carbonic anhydrase, clin. value)
(BLOOD,
carbonic anhydrase, relation to gastric acidity, clin. significance)
(CARBONIC ANHYDRASE,
carbonic anhydrase in blood, relation to gastric acidity clin.significance)

MIKHITARYAN, V. G.

Clinical significance of the correlation between carbonic anhydrase of the blood and acidity of stomach juices. V. G. Mkhitaryan, R. A. Arakelyan, and S. G. Shakhnazyan (Rev. Inst., Revvan). Izvest. Akad. Nauk Armyan. S.S.R.; Biol. i Sel'skokhoz. Nauki 8, No. 7, 61-7(1955)(in Russian; Armenian summary 57-8).—At normal activity of anhydrase and anhydrase index of blood, the quantity of HCl in the stomach is within normal limits. With gastritis and a reduced acidity the activity is lowered. With an increase in acidity of the stomach juices there is a rise in the activity of the carbonic anhydrase of the blood. At a lower acidity there is a more marked activity of the juices than under a higher acidity. The anhydrase index may supplement other lab. tests in determ. the functioning of the stomach in relation to the production of HCl. The study covers clinical cases of 84 patients and 16 healthy people.

J. S. Joffe

MD

2

MKHITARYAN, V.G.

Effect of 2-chloro-1,3-butadiene (chloroprene) on the amount of ascorbic acid in the organs of white rats. Report No.1. Izv.AN Arm. SSR.Biol.i sel'khoz. nauki 10 no.6:11-24 Je '57. (MLRA 10:8)

1.Kafedra biokhimii Yerevanskogo meditainskogo instituta.
(CHLOROPRENE--TOXICOLOGY)
(ASCORBIC ACID)

MKHITARYAN, V.G.

Effect of 2-chloro-1,3-butadiene (chloroprene) on the oxidation of fats. Part 3. Izv.AN Arm.SSR. Khim.nauki 11 no.2:109-118 '58. (MIRA 11:11)

1. Yerevanskiy meditsinskiy institut.
(Chloroprene) (Fats) (Oxidation)

MKHITARYAN, V.G.; YESAYAN, N.A.

Effect of 2-chloro-1,3-butadiene (chloroprene) on the xanthine oxidase activity of liver in white rats. Izv. AN Arm. SSR Biol. i sel'khoz. nauki 11 no.6:13-20 Je '58. (MIRA 11:7)
(CHLOROPRENE) (XANTHINE OXIDASE)

MKHITARYAN, V.G.; ASTVATSATRYAN, S.A.

Effect of 2-chloro-1,3-butadiene (chloroprene) on phosphatase activity in the organs of white rats. Izv.AN Arm.SSR Biol. nauki 12 no.5:13-21 My '59. (MIRA 12:9)

1. Kafedra biokhimii Yerevanskogo meditsinskogo instituta.
(CHLOROPRENE--TOXICOLOGY) (PHOSPHATASE)

MKHITARYAN, V.G.

Effect of chloroprene on some oxidative processes in the liver and the brain. Report No.7. Vop. biokhim. 1:135-147 '60.
(MIRA 14:12)

1. Department of Biochemistry, Medical Institute, Erevan.
(CHLOROPRENE) (OXIDATION, PHYSIOLOGICAL)

MKHITARYAN, V.G.

Effect of chloroprene on the adenosinetriphosphatase activity of the organs of white rats; report No. 9. Trudy Erev.med.inst. no.11:41-47 '60. (MIRA 15:11)
(CHLOROPRENE) (ADENOSINETRIPHOSPHATASE)

MKHITARYAN, V.G.

Effect of chloroprene (2-chloro-1,3-butadiene) on metabolism.
Izv. AN Arm. SSR. Biol. nauki 13 no.2:27-39 F '60. (MIRA 13:7)

1. Kafedra biokhimii Yerevanskogo meditsinskogo instituta.
(CHLOROPRENE—TOXICOLOGY) (BLOOD—ANALYSIS AND CHEMISTRY)

MKHITARYAN, V.G.

Effect of chloroprene on the concentration of protein and protein fractions, cholesterol, and glucose in the blood of workers. Izv. AN Arm.SSR. Biol.nauki 13 no.9:65-74 S '60. (MIRA 13:11)

1. Kafedra biokhimii Yerevanskogo meditsinskogo instituta.
(CHLOROPRENE)
(BLOOD--ANALYSIS AND CHEMISTRY)

[illegible]ANITARYA, V. G., [illegible]

"The Influence [illegible] on the Metabolism in Animals."

Report presented at [illegible] Intl. [illegible], Moscow, [illegible]-16 Aug [illegible].

MKHITARYAN, V.G.

Effect of chloroprene on the cholinesterase activity of the brain in white rats. Izv. AN Arm. SSR. Biol. nauki 14 no.3:37-44 Mr '61. (MIRA 14:3)

1. Kafedra biokhimii Yerevanskogo meditsinskogo instituta.
(CHLOROPRENE) (CHOLINESTRASE)
(BRAIN)

L 53932-65 EWT(m)/EPF(c)/EWP(j) Pc-4/Pr-4 RM

ACCESSION NR: AP5017354 UR/0298/64/017/011/0063/0068

AUTHOR: Mkhitaryan, V. G.; Khachatryan, L. L. 29 B

TITLE: Variations of hexokinase activity in the organs of white rats during chloroprene poisoning

SOURCE: AN ArmSSR. Izvestiya. Biologicheskiye nauki, v. 17, no. 11, 1964, 63-68

TOPIC TAGS: experiment animal, toxicology, animal physiology, biochemistry

Abstract: To discover the effect of chloroprene on hexokinase activity, 30 adult white rats of both sexes, weighing from 150 to 270 grams, were poisoned in a chloroprene atmosphere (8mg/liter) for two hours every day for 150-160 days. Hexokinase activity was measured in homogenates of the brain, kidney, heart and skin according to the method of C. Long. The results demonstrate the high sensitivity of the hexokinase of these organs to chloroprene. Hexokinase activity was reduced 80% in the skin, 57.04% in the kidneys, 52.1% in the brain, and 50.4% in the heart. Orig. art. has 3 tables.

ASSOCIATION: Yerevanskiy meditsinskiy institut (Yerevan Medical Institute)

SUBMITTED: 29Jul64 ENCL: 00 SUB CODE: LS

NO REF SOV: 008 OTHER: 020 JPRS

Card 1/1

APPROVED FOR RELEASE: 06/14/2000 CIA-RDP86-00513R001134810015-7"

L 23838-66 EWT(1)/EWT(m)/EWP(j) RO/RM

ACC NR: AP6015259 SOURCE CODE: UR/0298/65/018/001/0079/0084

AUTHOR: Mkhitaryan, V. G.; Astvatsatryan, S. A.

ORG: Yerevan Medical Institute (Yerevanskiy meditsinskiy institut)

TITLE: Effect of chloroprene on cathepsin activity

SOURCE: AN ArmSSR. Izvestiya. Seriya biologicheskikh nauk, v. 18, no. 1, 1965, 79-84

TOPIC TAGS: rat, liver, brain, enzyme

ABSTRACT: Rats were subjected for 2 hrs per day during 100-110 days to the action of chloroprene present in a concentration of 8 mg/l. in the air. As a result of poisoning with chloroprene, the cathepsin activity in the brain of the animals was reduced by 42.1% vs. that of control rats, the activity in the liver by 39.3%, and the activity in the kidneys by 32%. H_2S added to the tissues of the organs of poisoned rats reactivated the cathepsins, raising their activity by 29.2% in the kidney, 39.3% in the liver, and 54.5% in the brain tissue from the low level produced as a result of the action of chloroprene. The fact that the cathepsins were reactivated by H_2S indicated that the thiol groups of these enzymes, which were oxidized to S-S groups as a result of the decrease under the effect of chloroprene of the content of the natural activators of cathepsins, i.e., ascorbic acid and glutathione, were restored by reduction of the S-S groups with H_2S. Orig. art. has: 5 tables. [JPRS]

SUB CODE: 06 / SUBM DATE: 29Jul64 / ORIG REF: 004 / OTH REF: 007

Card 1/1

L 39917-66

ACC NR: AP6029375 SOURCE CODE: UR/0427/66/019/002/0054/0059

AUTHOR: Mkhitaryan, V. G.; Badalyan, G. Ye.

ORG: Department of Biochemistry, Yerevan Medical Institute (Kafedra biokhimii yerevanskogo meditsinskogo instituta)

TITLE: Shifts in content of gangliosides in the brain of white rats in connection with x-ray irradiation

SOURCE: Biologicheskiy zhurnal Armenii, v. 19, no. 2, 1966, 54-59

TOPIC TAGS: rat, nervous system, radiation biologic effect, radiology, enzyme

ABSTRACT: The amount of free gangliosides in the brain of white rats ranged within the limits of 1.17-1.51 and constituted on an average 1.26 ± 0.05 (expressed with respect to galactose in mg per g of dry tissue weight). The amount of fixed gangliosides was almost five times greater (an an average 6.31 mg per g of dry protein weight). Within two days a single total x-ray treatment (800 r) caused a reduction in the amount of free gangliosides to 0.92 mg, 28.1% below the norm. Free ganglioside content continued to drop in succeeding days, reaching 0.81 mg on the 7th day (36.8% below the norm) and 0.77 mg on the 14th day (39.9% below the norm). The content of fixed gangliosides did not change. Chronic x-ray treatment (30 r per day for 30 days) reduced free gangliosides by 26.6%.

Orig. art. has: 3 tables. [JPRS: 36,932]

SUB CODE: 06 / SUBM DATE: 25Jun65 / ORIG REF: 005 / OTH REF: 007

Card 1/1

MKHITARYAN, V.G.

Effect of chloroprene on the sulfhydryl compound content of tissues. Izv. AN Arm. SSR. Biol. nauki 15 no.5:39-49 My '62. (MIRA 17:6)

1. Kafedra bioknimii Yerevanskogo meditsinskogo instituta.

MKNDLIN, I.M. (Moskva)

Stability of the motion of a gyroscope on a horizontal plane under the action of dry sliding friction. Inzh.zhur. 5 no.2:211-216 '65. (MIRA 18:4)

S/839/62/000/000/004/004
E193/E383

AUTHOR: Mkrchants, Yu.S., Engineer

TITLE: A study of mechanical properties of some aluminium alloys in tension and compression

SOURCE: Stroitel'nyye konstruktsii iz alyuminiyevykh splavov. Ed. by S. V. Taranovskiy. Moscow, Gosstroyizdat, 1962. 78 - 84

TEXT: The object of the present investigation was to compare the load-carrying capacity of [illegible]16- (D16-T) and [illegible]-6 (AMg6) alloys in tension and compression. To this end, the appropriate strain/stress diagrams were constructed and 0.2% proof stress ($\sigma_{0.2}$), proportionality limit (σ_p) and Young modulus (E) in both tension and compression were determined as well as the UTS and elongation. The tests were carried out on specimens cut in the direction of rolling from 6 mm thick plate. The compressive test pieces were tested in a specially designed jig to avoid buckling. The average results of several determinations are given below:

Card 1/3

A study of mechanical S/839/62/000/000/004/004
E193/E383

	σ_p		$\sigma_{0.2}$		σ_{UTS}	E		Elongation, %
	kg/mm^2							
	Tension	Compression	Tension	Compression	Tension	Tension	Compression	Tension
D16-T	30.8	28.3	35	33.5	48.7	7 300	7 430	16.2
AMg6	16	16.3	17.7	18	37.6	7 200	7 140	2.19

Conclusions: 1) The strain/stress diagrams constructed for alloy D16-T tested in tension and compression differ slightly, this difference being most pronounced beyond the proportionality limit, where the transition from the elastic to plastic deformation is more gradual in the compression stress/strain diagram. The same applies to the AMg6 alloy but the difference in this case is very small. 2) The values of σ_p and $\sigma_{0.2}$ in compression are slightly lower than those in tension in the case of alloy D16-T and approximately equal for alloy AMg6. The elastic modulus in tension is practically the same as that in compression for both

Card 2/3

A study of mechanical S/839/62/000/000/004/004
E193/E383

the alloys studied. 3) If an accurate solution is sought of the problem of stability of various constructional elements fabricated from alloys such as D16-T, the strain and stress analysis should be based on stress/strain diagrams constructed both for compression and tension. There are 2 figures and 1 table.

Card 3/3

S/193/61/000/002/001/009
A005/A004

AUTHORS: Yurmanov, F.N., Mkrtchan, L.S.

TITLE: Desulfurization of Pig Iron Outside the Blast Furnace

PERIODICAL: Byul. tekhn.-ekon. inform., 1961, No. 2, pp. 3 - 6

TEXT: The introduction of desulfurization of pig iron outside the blast furnace makes it possible to apply the slag ratio $CaO : SiO_2 = 0.8 - 1.0$, which decreases the coke consumption by 10-15% and increases the productivity by 12-18%; moreover, it increases the life of the blast furnace lining; widens the assortment of the coking coals, makes it possible to exclude green limestone from the charge, to decrease the fluxing degree of the agglomerate, which stiputates the enrichment of the latter with iron, to increase the efficiency of the steel-smelting equipment when producing low-sulfurous pig iron and to increase the metal quality. As reagents lime and metallic magnesium are used in the desulfurization of pig iron. Since 1948, metallic magnesium has been employed for the modification and desulfurization of cast iron; magnesium can be added to the molten cast iron in a solid and liquid state and reacts in a vaporous state with the sulfur, according to the reaction:

Card 1/2

$$FeS + Mg_{vap} = MgS_{sol} + Fe.$$

S/13 3/61/000/002/001/009
A005/A004

...ization of Pig Iron Outside the Blast Furnace

...is insoluble in pig iron and floats to the surface after being formed. At a ...iron temperature of 1,350°C, the vapor tension of Mg attains 6.3 atg, and, therefore, the required total amount of Mg should be added in small individual portions because the greater part of it (about 80%) emerges to the surface and ...s in the atmospheric air. The rate of adding Mg should not be larger than ...00 g per second in continuous or discontinuous doses; for this purpose, the desulfurizing installation was developed, which is illustrated by the Figures 1 and ... Figure 1 shows the layout of the experimental installation consisting of: desulfurization section 1 with three melting and blowing apparatus and heating pits making it possible to desulfurize the pig iron outside the furnace in the ladle ...rs 3 with covers 4 by liquid magnesium. The installation is equipped with crane ... The Tsentral'nyy nauchno-issledovatel'skiy institut chernoy metallurgii (Central Scientific Research Institute of Ferrous Metallurgy) in collaboration with ...e Plant im. Dzerzhinskiy carried out the tests which showed the possibility to ...d Mg without danger. The quantity of Mg added to the pig iron can be adjusted within wide limits. The purification degree is very high (up to traces only); ...e Mg-consumption is comparatively low and amounts to about 1 kg Mg per 1 kg

Card 2/7

eliminated sulfur. With this method the utilization factor of Mg attains 95%. The purification of 80 t cast iron takes about 5 minutes. There is no saturation of the surrounding atmosphere by noxious contaminations and no slag formation corroding the fettling of the apparatus. When Mg-treated pig iron is blown through in Bassemer converters, the process is taking place without reduction of sulfur from the slag being formed. The following pig iron grades were subjected to the desulfurization process: Martin steel with 0.05-0.15% sulfur content and Bessemer steel with 0.03-0.08% sulfur content. The table presented shows the most characteristic results:

Desulfurization of Pig Iron Outside the Blast Furnace

S/193/61/000/002/001/009
A005/A004

a) Mg-consumption kg/t of pig iron; b) S-content in the pig iron in %, c) before, d) after desulfurization; e) Eliminated S kg per 1 t pig iron; f) Mg-consumption kg/kg of sulfur before desulfurizing; g) Mg-consumption kg/kg eliminated S; h) Desulfurization degree in %

Расход магния, кг/т чугуна a	Содержание серы в чугуне, % b		Удалено серы, кг из 1 т чугуна e	Расход магния, кг/кг серы до обессеривания f	Расход магния, кг/кг удаленной серы g	Степень обессеривания, % h
	до обессеривания c	после обессеривания d				
1,04	0,030	0,005	0,25	3,46	4,00	83,0
0,50	0,050	0,028	0,22	1,00	2,22	46,0
0,93	0,071	0,012	0,59	1,31	1,59	83,0
1,00	0,087	0,017	0,70	1,15	1,43	80,0
1,10	0,117	0,017	1,00	0,94	1,10	85,4
1,10	0,124	0,007	1,18	0,88	0,93	94,4
1,20	0,129	0,007	1,22	0,93	0,98	94,6
1,23	0,140	0,010	1,30	0,88	0,95	93,0
1,40	0,159	0,037	1,22	0,88	1,14	76,8

Card 4/7

S/193/61/000/002/001/009
A005/A004

Desulfurization of Pig Iron Outside the Blast Furnace

Figure 2 shows the schematic of the melting and blowing apparatus of the desulfurization installation in two variants, either with electric or gas heating. For electric heating, coils of nichrome are employed rated for three-phase current of 380 v; the melting of 70 kg Mg takes about 30 min. The gas-heating unit has three gas burners placed tangentially through 120° and inclined through 60° to the vertical axis. Coke gas is employed; the melting of 80 kg Mg takes about 25 min. The melting and blowing apparatus consists of the following components: metallic housing 1; reciprocating engine 2 mounted on the housing cover; the housing is lined with foam fire bricks 3; thick walled-steel crucible 4 for Mg melting placed inside the housing; bottom 5 of the crucible; the Mg supply line 6 welded to the crucible bottom; stopper device 7 at the end of the Mg-supply line; hollow rod 8 passing through the crucible and Mg-supply line axis; blind tube 9. The steel Mg-supply line consists of three members and has an axial bore 54 mm in diameter by which the magnesium is fed from the crucible into the pig iron; the external surface of the conductor is faced with refractory material. Thermocouples are used to measure the temperature in the Mg-supply line and in the melting crucible; Argon is being supplied to the crucible at 0.2 atg during the melting and 3 atg during desulfurizing. The control of the electro-crane and the valves supplying the air into the reciprocating engine is effected from a control panel.

Card 5/7

S/193/61/000/002/001/009
A005/A004

Desulfurization of Pig Iron Outside the Blast Furnace

Figure 1:

Schematic of the experimental desulfurization installation.

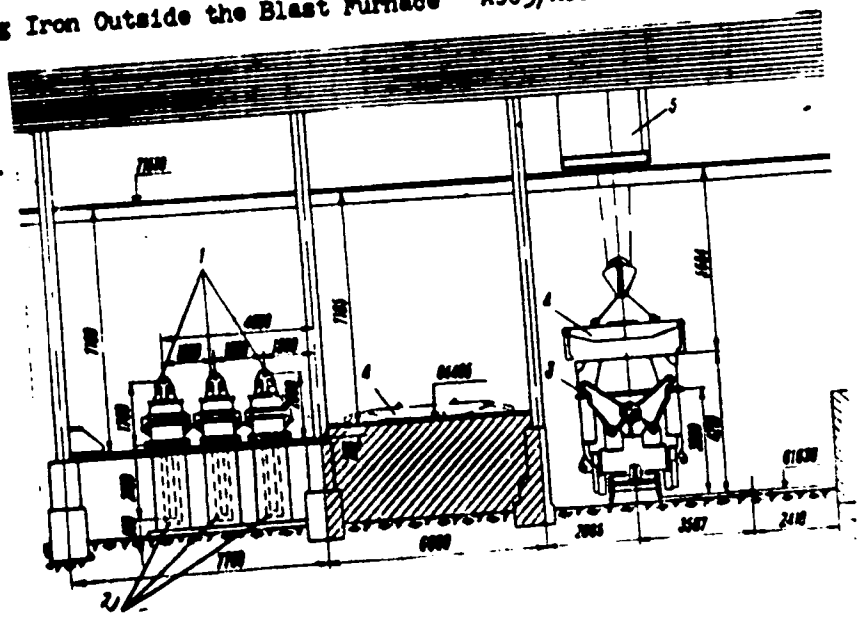

Card 6/7

S/193/61/000/002/001/009
A005/A004

Desulfurization of Pig Iron Outside the Blast Furnace

Figure 2:

Schematic of the melting and blowing apparatus.

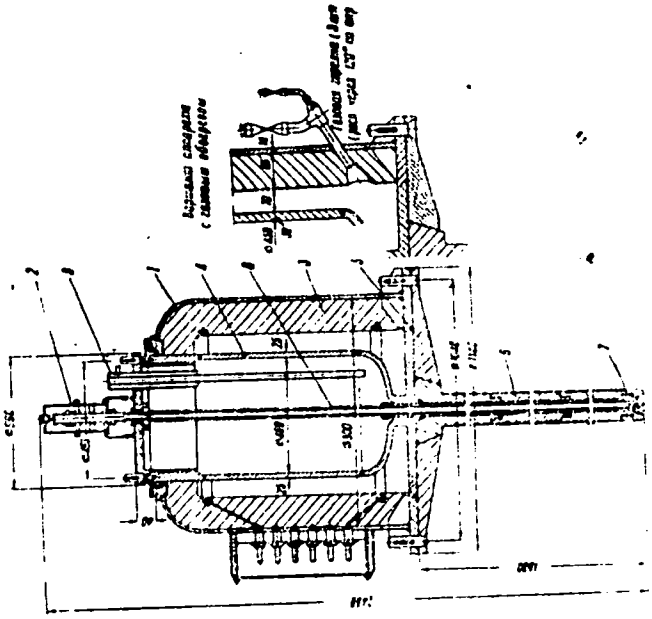

Card 7/7

VOSKOBOYNIKOV, V.G.; KHROMOV, V.A.; REBEKO, A.F.; MKRTCHAN, L.S.; MITSKEVICH, O.V.; BIRMAN, A.I.

Mathematical analysis of certain design parameters of thermal conditions of the blast furnace process. [Sbor. trud.] TSNIICHM no.29:9-23 '63. (MIRA 17:4)

1. TSentral'nyy nauchno-issledovatel'skiy institut chernoy metallurgii (for Voskoboynikov, Khromov, Rebeko, Mkrtchan).
2. TSentral'nyy nauchno-issledovatel'skiy institut kompleksnoy avtomatizatsii (for Mitskevich, Birman).

PANOV, B.D.; KASPERSKIY, B.V.; MKRTCHAN, O.M.

Using hydrocarbon-base flushing fluids in a well 3675 m. deep. Burenie no.9:13-16 '65. (MIRA 18:10)

1. Krasnodarskiy fialial Vsesoyuznogo neftegazovogo nauchno-issledovatel'skogo instituta i kontora bureniya Neftepromyslovogo upravleniya "Chernomorneft'".

MKRTYCHAN, Ya.S.; SERDIY, A.G.; KAABEN, A.A.

Bench for testing the durability of the "B[illegible]" of hydraulic power and power slush pumps. Mash. [illegible] no.10:11-13 '64 (MIRA [illegible])

1. Moskovskiy institut neftekhimicheskoy i [illegible] ... [illegible] im. akademika I.M. Gubkina.

MKRTYCHEV, A.A.

Comments on B.S.Sotskov's article. [illegible]
'64.

MKRTYCHEV, Ivan [illegible]tyunovich, arkhit.; POLUBNEVA, V.[illegible], inzh., [illegible]

[Standard foundationless houses for temporary settlements of builders; based on materials of the All-Union Planning, Surveying, and Research Institute of the Administration for Planning, Surveying, and Research for the Construction of Hydraulic Engineering Structures of the Ministry of Electric Power Stations of the U.S.S.R.] Inventarnye [illegible] fundamentnye doma dlia vremennykh poselkov stroitelei, po materialam Vses. iuznogo proektno-izyskatel'skogo i nauchno-issledovatel'skogo instituta "Gidroproekt" im. [illegible]. Moskva, Gos. [illegible]izdat, 1963. 32 p. (MIRA [illegible])

1. Moscow. Nauchno-issledovatel'skiy institut organizatsii mekhanizatsii i tekhnicheskoy pomoshchi stroitel'stvu.
2. Vsesoyuznyy proektno-izyskatel'skiy i nauchno-issledovatel'skiy institut imeni S.Ya.Zhukova (for Mkrtychev).

MERTCHYAN, A.A.; YEGIKYAN, A.A.

Breeding wheat varieties by hybridization with free pollination [with summary in English]. Izv.AN Arm.SSR.Est.nauki no.2:15-27 '47. (MLRA 9:8)

(Wheat) (Hybridization, Vegetable)

MKRTCHIAN, A.A.

Effect of the sexual mentor in attenuating the depressing effect caused by inbreeding. Izv. AN Arm. SSR. Biol. i sel'khoz. nauki 1 no.2:129-133 '48. (MLRA 9:8)

1. Institut genetiki rasteniy Akademii nauk Armyanskoy SSR.
(PLANT BREEDING)

MKRTCHYAN, A.A.

Effect of the pollen of spring and winter wheat on the development of the rye plant. Izv.AN Arm.SSR.Biol.i sel'khoz.nauki. 2 no.1: 45-53 '49. (MLRA 9:8)

1. Institut genetiki i selektsii rasteniy Akademii nauk Armyanskoy SSR.

(RYE) (WHEAT) (FERTILIZATION OF PLANTS)

BABADZHANYAN, G.A.; MKRTCHYAN, A.A.

Observations on self-pollination and cross-pollination of rye. Izv. AN Arm.SSR.Biol.i sel'khoz.nauki 6 no.10:9-22 '53. (MLRA 9:8)

1. Institut genetiki Akademii nauk Armyanskoy SSR.
(Rye) (Fertilization of plants)

MKRTCHYAN, A. A

USSR / Cultivated Plants. Cereals.

Abs Jour : Ref Zhur - Biol., No 9, 1958, No 38653

Author : ~~Mkrtch/an, A. A.~~

Inst : Armenian Scientific Research Institute for Agriculture.

Title : Phenomenon of Male Sterility in Corn.

Orig Pub : Byul. nauchno-tekhn. inform. Arm. n.i. in-t zemled., 1957, No 2, 15-16.

Abstract : No abstract.

Card 1/1

MKRTCHYAN, A.A.

Overcoming depression in wheat hybrids by supplementary pollination with heterogeneous pollen [with summary in English] Zhur. ob. biol. 18 no.2:112-120 Mr-Ap '57 (MLRA 10:5)

1. Institut genetiki i selektsii rasteniy AN ArmSSR.
(WHEAT BREEDING) (HYBRIDIZATION, VEGETABLE)

MKRTCHYAN, A. K., Cand Ped Sci -- (diss) "Inculcation of patriotism in young students by means of Soviet children's literature in extra-curricular work. (According to materials from the schools of the Armenian SSR)." Yerevan, 1960. 19 pp; (Academy of Pedagogical Sciences RSFSR, Scientific Research Inst of Teaching Methods); 150 copies; price not given; (KL, 31-60, 144)

MKRTCHYAN, A.O.

Arborescent varieties of Leninakan and its environs and the possibilities of using them in steppe shelterbelt afforestation and in landscaping settled areas [in Armenian with summary in Russian]. Izv.AN Arm.SSR,Biol.i sel'khoz.nauki. 4 no.3:223-233 '51. (MLRA 9:8)

(Leninakan region--Trees)

MKRTCHYAN, A.O.

Changing the nature of flax from a spring to a winter crop. Izv. AN Arm.SSR.Biol.i sel'khoz.nauki. 5 no.9:69-74 '52. (MLRA 9:8)

1. Botanicheskiy institut AN Armyanskoy SSR.
(Armenia--Flax)

MKRTCHYAN, A.O.

Improving the winter hardiness of some decorative trees by cultivation measures. Biul.Glav.bot.sada no.21:86-89 '55. (MIRA 8:12)

1. Yerevanskiy botanicheskiy sad Botanicheskogo instituta Akademii nauk Armyanskoy SSR.
(Plants--Frost resistance) (Plants, Ornamental)

MKRTCHYAN, A.O.; BOZOYAN, A.A.

Influence of rootstock on flowering in the fine-leaved form of yellow locust. Izv. AN Arm. SSR. Biol. i sel'khoz. nauki 11 no.7:111-116 Jl '58. (MIRA 11:9)

1. Botanicheskiy institut AN ArmSSR.
(Locust (Tree)) (Plants, Flowering of) (Grafting)

MKRTCHYAN, A.R.

New possible use of the nuclear magnetic resonance method for the study of disorded crystals. Dokl. AN Arm. SSR 37 no.5:269-272 '63. (MIRA 17:9)

1. Institut khimicheskoy fiziki AN SSSR. Predstavleno chlenom-korrespondentom AN Armyanskoy SSR N.M. Kochharyanom.

L 42924-65 EWT(1)/EWG(k) Pab

ACCESSION NR: AP5006460 S/0032/65/039/003/0171/0175

AUTHOR: [illegible]; Mikhaylov, A. N.

TITLE: Reference voltage for high-precision current stabilizers

SOURCE: Ob Izmer. Pribory, V. 39, no. 3, 1965, 171-175

TOPIC TAGS: voltage stabilization, microwave spectroscopy, magnet current stabilization, Zener diode, temperature compensation

ABSTRACT: After explaining the main problems involved in stabilizing the magnetic field of microwave spectroscopes in time and ensuring the uniformity of the field in space, and after listing the methods used for magnetic flux stabilization in the past, [illegible] microwave spectrometers, the authors describe a circuit for stabilization of the excitation current in the electromagnet winding by using a high precision reference voltage. To obtain a more accurate reference voltage than is provided by chemical sources, the authors have developed a temperature-compensated four-diode voltage divider, in which the temperature rise of an resistor is offset by the rise in another resistor. A diagram of the

Card 1/3

L 25293-65

ACCESSION NR: AP5002690

A compensated voltage divider is shown in Fig. 1 of the enclosure. This divider is used as the last stage of a standard rectifier circuit stabilized with both a ferroresonant circuit and with gas filled ballast tubes. The complete circuit can maintain the reference constant within 10^{-3} of its initial value in the temperature range from 18 to 45C. This report was presented by N. N. Kocharyan. Orig. art. has: 11 formulas and 6 figures.

ASSOCIATION: Institute of Radio Electronics, Academy of Sciences, SSSR (Institute of Chemical Physics, Academy of Sciences, USSR)

SUBMITTED: 00 ENCL: 01 SUB CODE: EE, MP

NO REF SOV: 003 OTHER: 007

Card 2/3

L 10902-66 EWT(1)/ETC(m) IJP(c) WW

ACC NR: AP6004501 SOURCE CODE: UR/0022/65/018/001/0140/0152

AUTHOR: Dekabrun, L. L.; Mkrtchyan, A. R.

ORG: Institute of Chemical Physics, AN SSSR (Institut khimicheskoy fiziki, AN SSSR)

TITLE: System to control the exciting current of electromagnets of nuclear magnetic-resonance (NMR) spectrometers

SOURCE: AN ArmSSR. Izvestiya. Seriya fiziko-matematicheskikh nauk, v. 18, no. 1, 1965, 140-152

TOPIC TAGS: current stabilization, automatic control, automatic control system, electromagnet, NMR spectroscopy, spectrometer, magnetic field

ABSTRACT: The article enumerates the requirements for the source of the main magnetic field H_0 in NMR spectrometers designed to investigate crystal structure: 1) long duration (up to two hours) and great depth (up to 0.1 H_0) of linear scanning of the magnetic field during spectra recording; 2) the initial value of H_0 for various crystals may differ substantially within, say, 1 to 10 kilo-oersteds; 3) high homogeneity of the magnetic field and exact correspondence of H_0 to the value prescribed by experimental conditions. The third requirement relates to magnet design, while the first two requirements relate to the power-supply system. In order to investigate crystal order-disorder by NMR spectroscopy methods, the authors, jointly with the designers and technologists of the Production

Card 1/2

L 10902-66

ACC NR: AP6004501

Division of the Institute of Chemical Physics of the Academy of Sciences USSR (division director Ye. K. RUSSIYAN), developed a source of H_0 which meets all the requirements. The present article describes the power-supply system for the electromagnet. An electronic current stabilizer of the series type is used. The effect of line voltage oscillations is neutralized by the use of an electromechanical transducer with relatively coarse electronic stabilization of output voltage. The initial value of the exciting current of the electromagnet and the law of its scanning in time are established by means of two independent reference voltage sources in the current stabilization system. Since the scanning time may exceed two hours, mechanical scanning by means of a synchronous motor is employed. A specially developed reference voltage source is used: silicon stabilitron tubes with temperature-compensating dividers. The stabilization system uses 6S18S high-power triodes, with an optimal operational mode assured. The special design of the interruptor and error signal amplifier assures reliable amplification of microvolt signals. The control resistance is made of manganin wire in the form of a bifilar loop. The authors found a lack of correspondence between the actual behavior of the stabilization system and the behavior which might be expected on the basis of the generally accepted electromagnet substitution circuit. As a result, the pass band of the amplifier has to be limited, which operation is accomplished by increasing the time constant of the synchronous detector. Orig. art. has: 14 figures and 19 formulas. [JPRS]

SUB CODE: 13, 20, 09 / SUBM DATE: 18Apr64 / ORIG REF: 014 / OTH REF: 009

Card 2/2

L 2000-66 EWT(1)/EPF(c) IJP(c) WW/GG

ACCESSION NR: AP5018626 UR/0022/65/018/003/0134/0142

AUTHOR: Dekabrun, L. L.; Kil'yanov, Yu. N.; Mkrtchyan, A. R.

TITLE: Autodyne nuclear magnetic resonance pickups

SOURCE: AN ArmSSR, Izvestiya, Seriya fiziko-matematicheskikh nauk, v. 18, no. 3, 1965, 134-142

TOPIC TAGS: nuclear magnetic resonance, nmr spectroscopy, negative feedback, signal processing, stabilizer

ABSTRACT: The authors present analysis of the stabilizing action of active negative feedback on autodyne pickups for the investigation of solids by the NMR method. In such applications, autodyne pickups have certain advantages over others, but must be stabilized when the signal voltage is low, such as is the case with solid-state NMR. The transients in an autodyne pickup with stabilized amplitude are calculated, and the modifications that must be introduced in the pickup circuit to ensure stability are described. Empirical means of selecting the autodyne circuit and its parts to obtain maximum sensitivity are suggested, since a theoret-

Card 1/3

L 2000-66

ACCESSION NR: AP5018626

3

ical analysis of this problem is impossible. A schematic diagram of a pickup with stable operation at less than 0.005 volt on the resonant circuit is presented. The diagram is shown in Fig. 1 of the Enclosure. This circuit has been thoroughly tested and proved itself in practical investigations of several natural compounds by the NMR method. Orig. art. has: 6 figures and 21 formulas.

ASSOCIATION: Institut khimicheskoy fiziki AN SSSR (Institute of Chemical Physics, AN SSSR)

44,55

SUBMITTED: 04Nov64 ENCL: 01 SUB CODE:

NR REF SOV: 005 OTHER: 012

Card 2/3

L 2000-66
ACCESSION NR: AP5018626

ENCLOSURE: 01

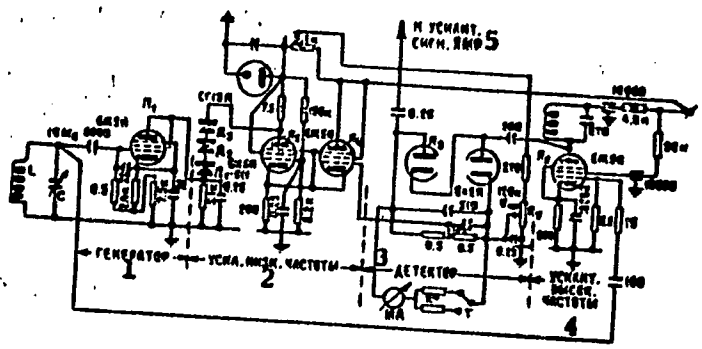

Fig. 1. Complete schematic diagram of autodyne pickup, intended for the investigation of crystals.

1 - Generator, 2 - low-frequency amplifier, 3 - detector, 4 - high-frequency amplifier, 5 - to NMR signal amplifier.

Card 3/3

L 15818-66 EWT(1)/EWA(h)

ACC NR: AP6000905 SOURCE CODE: UR/0022/65/018/004/0106/0117

AUTHOR: Dekabrun, L. L.; Mkrtchyan, A. R.

ORG: Institute of Chemical Physics, AN SSSR (Institut khimicheskoy fiziki AN SSSR)

40
37
B

TITLE: Amplification of error signals in precision current stabilizers

SOURCE: AN ArmSSR. Izvestiya. Seriya fiziko-matematicheskikh nauk, v. 18, no. 4, 1965, 106-117

TOPIC TAGS: error minimization, current stabilization, amplifier design, electronic circuit

ABSTRACT: The authors analyze the various parameters of error-signal amplifiers and their effect on the accuracy of current stabilizers (bandwidth, gain, sensitivity). Tentative values of these parameters are established for the most accurate systems employed in practice, namely systems for stabilizing the current in radio spectrometer electromagnets. The physical factors governing the tolerances that are imposed on the amplifier characteristics are discussed. An analysis is presented of the system for converting the signal when an input transformer is used. The transformerless conversion systems are also discussed, and methods of protection against possible interference are described. The difficulties in shielding transformers against external noise are discussed. A contact-making converter with magnetically isolated contact system is described. The main and auxiliary circuits of an RC amplifier for the purpose are given, as well as the circuits for phase adjustment and for synchronous detection (Fig. 1). The final amplifier designed had a sensitivity of

Card 1/2

L 15818-66

ACC NR: AP6000905

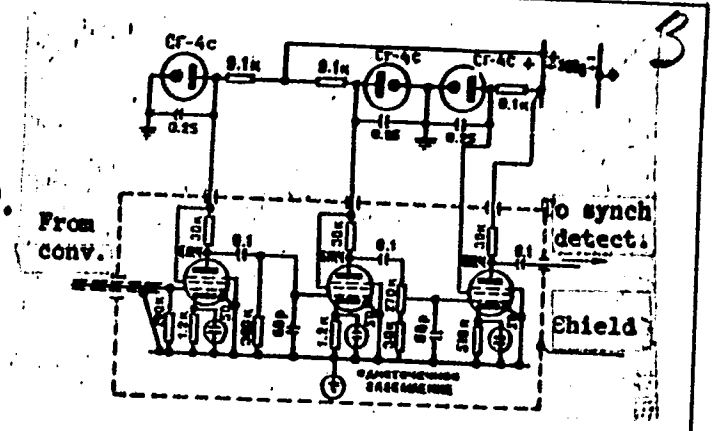

Fig. 1. Schematic diagram of RC amplifier with maximum gain ~2 x 10^6.

several tenths of a microvolt and a maximum gain more than 10^6. It is stable over a prolonged period of operation. Authors thank the members of the group of nuclear magnetic resonance of the Institute of Chemical Physics of the SSSR Academy of Sciences, O. D. Vetrov, Yu. N. Kil'yanov, and K. S. Zimin for help with the work. Orig. art. has: 7 figures and 22 formulas.

SUB CODE: 09/ SUBM DATE: 09Dec64/ ORIG REF: 007/ OTH REF: 005

Card 2/2

MKRTCHYAN, A.R.; MARFUNIN, A.S.

Quadrupole splitting and the disordered state of Li^7 in amblygonite $LiAlPO_4$ (OH,F). Dokl. AN SSSR 163 no.3:609-612 Jl '65. (MIRA 18:7)

1. Institut khimicheskoy fiziki AN SSSR i Institut geologii rudnykh mestorozhdeniy, petrografii, mineralogii i geokhimii AN SSSR. Submitted December 31, 1964.

MKRTCHYAN, A. S.

6832. Mkrtchyan, A. S. Lorlyskiy elemennyy zhivotnovodicheskiy sovkhoz. (Rasskaz direktora sovkhoza. Zapisal S. Kurtikyan). Yerevan, Aypetrat, 1954. 92 s. s. Ill.; 1 L. fortr. .1 sm.(Peredovoy opyt v sel'skom khozyaystve). 3,000 ekz. 2 r. 7[illegible] k. V per. - [illegible] rm. yaz. --(55-1499)
332.1 Sov. 636.2 (47.[illegible])

SO: Knizhnaya Letopis' No. 4, 1955

ACCESSION NR: AP4018991 S/0146/64/007/001/0011/0015

AUTHOR: Mkrtchyan, A. S.

TITLE: Investigation of stability of tunnel diodes in pulsed circuits

SOURCE: IVUZ. Priborostroyeniye, v. 7, no. 1, 1964, 11-15

TOPIC TAGS: tunnel diode, semiconductor, semiconductor device, tunnel diode stability, tunnel diode pulsed circuit, tunnel diode discriminator, pulse height discriminator

ABSTRACT: An experimental investigation of the threshold of operation of tunnel-diode pulse-height discriminators under various operating conditions is reported. To ensure a high input impedance, the discriminator circuit included a P-402 transistor in whose collector circuit the germanium tunnel diode was connected. The following conclusions are offered: (1) The threshold drift is ± 0.1% or less after 50 hrs of operation with 0.1-10 microsec trigger pulses

Card 1/2

ACCESSION NR: AP4018991

repeated at 50-10,000 per sec; (2) A collector-voltage fluctuation of ± 5% is tolerable; (3) The ambient temperature has an appreciable effect on the threshold of operation (curves supplied); a temperature compensation is advised. Orig. art. has: 5 figures and 6 formulas.

ASSOCIATION: Leningradskiy institut tochnoy mekhaniki i optiki (Leningrad Institute of Precision Mechanics and Optics)

SUBMITTED: 18Feb63 DATE ACQ: 23Mar64 ENCL: 00

SUB CODE: GE NO REF SOV: 000 OTHER: 001

Card 2/2

MKRTCHYAN, A.S.

[illegible] uzheb.zav.; [illegible] (MIRA 18:4)

1. Leningradskiy in[illegible] mekhaniki i optiki. Rekomendovana kafedroy [illegible] mekhanicheskikh u[illegible]stv.

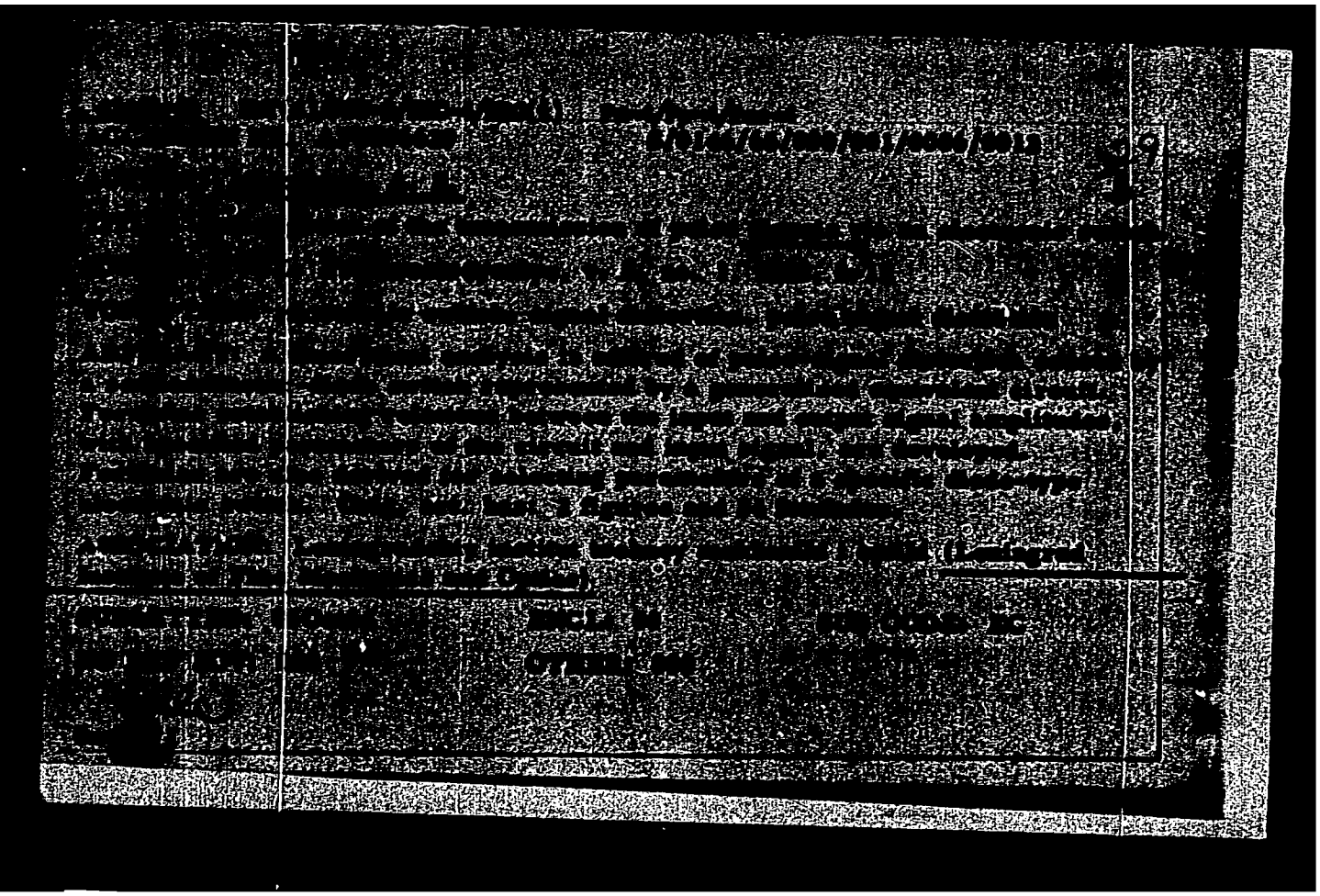

L 45498-66 EWT(d)/EWP(1) IJP(c) JG/BB

ACC NR: AP6015581 (N) SOURCE CODE: UR/0146/66/009/002/0092/0094

AUTHOR: Mkrtchyan, A. S.

ORG: Yerevan Polytechnic Institute (Yerevanskiy politekhnicheskiy institut)

69

B

TITLE: High-speed shift register

SOURCE: IVUZ. Priborostroyeniye, v. 9, no. 2, 1966, 92-94

TOPIC TAGS: shift register, computer component, digital computer, tunnel diode, switching circuit, transistor

ABSTRACT: The development of a tunnel-diode shift register is reported, its principal circuit is shown and its operation briefly explained. Emitter followers are used to prevent back information flow. It is claimed that the new shift register has simple control, no auxiliary elements, low consumption, and that its switching frequency can be raised to dozens mc provided high-speed tunnel diodes and r-f transistors are employed. Orig. art. has: 3 figures.

SUB CODE: 09 / SUBM DATE 08Feb65

Card 1/1

UDC: 621.374.32

Country : USSR
Category: Virology. Bacterial Viruses (Phages) E

Abs Jour: Ref Zhur-Biol., No 23, 1958, No 103493

Author : Mkrtchyan, A. Ye.
Inst : -
Title : Phagotyping of Typhoid Strains and its Significance in Epidemiological Practice

Orig Pub: Sb. Bakteriofagiya. Tbilisi, Gruzmedgiz, 1957, 217-223.

Abstract: Fifty-five typhoid cultures were isolated from the blood of patients with typhoid fever. On the basis of the sensitivity to Vi-phage it was possible to identify 46 cultures (83.6 o/o) 30 hours after seeding the patient's blood. The distribution of typhoid

Card : 1/2

MKRTCHYAN, A. Ye.

Cand Med Sci - (diss) "Epidemiology of typhoid in the city of Yerevan and the significance of the phage typing method in epidemiological evaluation." Yerevan, 1961. 21 pp; (Ministry of Public Health Armenian SSR, Yerevan Med Inst); 200 copies; price not given; (KL, 6-61 sup, 239)

PAPOVYAN, G.S.; MIRZABEKYAN, A.O.; VANTSYAN, Ye.A.; KAPABEKOV, B.P.; MKRTCHYAN, A.Ye.; MELKUMYAN, P.B.; GRIGORYAN, S.M.

Observations on botulism arising from canned Hippomarathrum microcarpum. Vop. pit. 24 no.1:87-88 Ja-F '65.

1. Institut epidemiologii i gigiyeny Ministerstva zdrav okhraneniya Armyanskoy SSR, Yerevan. (MIRA 18:9)

MKRTCHYAN, B.L., dots.

Latex as adhesive material. Veterinariia 35 no.11:47 N '58. (MIRA 11:11)

1. Yerevanskiy zooveterinarnyy institut.
(Bandages and bandaging) (Latex)

APPROVED FOR RELEASE: 06/14/2000 CIA-RDP86-00513R001134810015-7"

MKRTCHYAN, D. P.

36110 Ploskiye selsiny postoyannogo toka. Priborostroniye, vyp. 4. 1948, S. 25-30

SO: Letopis' Zhrunal' nykh Statey, No. 49, 1949

MKRTCHYAN, Derenik Petrovich

MKRTCHYAN, Derenik Petrovich; KHRUSHCHEV, Vitaliy Vasil'yevich; MAGIN, S.M., nauchnyy redaktor; ISAYEV, V.A., redaktor; DVORAKOVSKAYA, A.A., tekhnicheskiy redaktor; FRUMKIN, P.S., tekhnicheskiy redaktor

[Single-phase synchros] Odnofaznye selsiny. Leningrad, Gos.soyuznoe izd-vo sudostroit. promyshl., 1957. 343 p. (MLRA 10:9)
(Remote control)

SULEYMANOV, [illegible] BAGDASARYAN, I.S.; MKRTCHYAN, E.A.

[illegible] conditions from the viewpoint of engineering ge[illegible] [illegible] Jermuk Valley. Trudy Inst. geol. AN Armyan. SSR, [illegible]

USSR/Electricity - DC Generators
Modelling

Nov 52

"A Three-Phase Series Commutator as a Negative Resistance," Doc A. I. Vazhnov, Cand Tech Sci, and Engr E. S. Mkrtchyan, Leningrad Polytech Inst imeni Kalinin (LPI)

PA 240T60

"Elektrichestvo" No 11, pp 16-22

The 3-phase series commutator generator is used as a negative resistance in conjunction with synchronous generator models in order to obtain in the models the low active resistances found in high-power generators. Discusses its operation

240T60

under these conditions. Considerable experience in planning and operation of electrodynamic models has been acquired at LPI and Moscow Power Eng Inst imeni Molotov. Submitted 4 Jun 52.

240T60

MKRTCHYAN, E. S.

MKRTCHYAN, E. S.

The following is among dissertations of the Leningrad Polytechnic Institute imeni Kalinin:

"Compensation of Active Resistances of Synchronous Generators by Rotary Commutator Machines." 11 May 1953. The behavior of special commutator machines used in dynamic models of electrical systems is examined theoretically and experimentally. The operation of three-phase commutator generators in series was investigated. The equations of a commutator generator and synchronous generator are examined jointly.

SO: M-1048, 28 Mar 56

MKRTCHYAN, G.E.

Mechanism of the action of [illegible]otermin on the level of blood pressure under norm. conditions and in experimental hypertension. Ther. arkh. 1 klin. med. [illegible] [illegible]

NARIMANOV, Z.M.; AGADZHANYAN, G.I.; CHILINGARYAN, R.A.; DZHANZHUTOVA, R.S.; KAMENTSEVA, M.V.; MKRTCHYAN, G.K.

Professor A.A.Akopian; obituary. Vop. kur., fizioter. i lech. fiz. kul't. 26 no.1:94-95 '61. (MIRA 14:5)

1. Ministr zdravookhraneniya Armyanskoy SSR (for Narimanov). 2. Direktor Instituta kurortologii i fizicheskikh metodov lecheniya, Yerevan (for Agadzhanyan). 3. Zamestitel' direktora Instituta kurortologii i fizicheskikh metodov lecheniya po nauchnoy chasti, Yerevan (for Chiligaryan). 4. Rukovoditel' otdela izucheniya kurortnykh resursov Instituta kurortologii i fizicheskikh metodov lecheniya, Yerevan (for Dzhanzhutova). 5. Rukovoditel' fizioterapevticheskogo otdeleniya Instituta kurortologii i fizicheskikh metodov lecheniya, Yerevan (for Kamentseva). 6. Sekretar' Obshchestva kurortologov i fizioterapevtov Armenii (for Mkrtchyan).
(AKOPIAN, ARSHAK AIRAPETOVICH, 1886-1960)

MARTCHYAN, G.K.

Effect of an inductotherm on the state of the cardiovascular system in hypertension. Vop. kur., fizioter. i lech. fiz. kul't. 27 no.4:320-325 Jl-Ag'62 (MIRA 16:11)

1. Iz Instituta kurortologii i fizioterapii (direktor - dotsent S.A. Chshmarityan) Armyanskoy SSR.

MKRTCHYAN, G.K.

Ballistocardiographic changes in treating the 1st and 2d stages of hypertension with inductothermy. Zhur. eksp. i klin. med. 2 no.6:57-62 '62. (MIRA 18:10)

1. Institut kurortologii i fizioterapii Ministerstva zdravookhraneniya ArmSSR.

SATIAN, M.A.; KYUREGYAN, E.A.; MKRTCHYAN, G.M.; MARTIROSYAN, M.Ya.

Distribution of molybdenum in sediments in the area of the Lake Greater Sevan. Izv. AN Arm. SSR. Geol.i geog. nauki 15 no.2:31-34 '62. (MIRA 15:5)

1. Institut geologicheskikh nauk AN Armyanskoy SSR.
(Sevan Lake region--Molybdenum)

AVAKYAN, A.A.; MERTCHYAN, G.K.

Content of impurities in crystals of pyrite of [illegible] deposit. Dokl. AN ARM. SSR [illegible] 1965.

1. Institut geologicheskikh [illegible] 3, 1965.

MKRTYCH'YAN, I.A.

Effect of ultraviolet radiation of different wave lengths on the electric conductivity of skin in rabbits. Izv.AN SSSR.Ser. biol. no.3:418-422 My-Je '59. (MIRA 12:9)

1. Institute of Biological Physics, Academy of Sciences of the U.S.S.R., Moscow.
(ULTRAVIOLET RAYS--PHYSIOLOGICAL EFFECT) (SKIN)
(ELECTROPHYSIOLOGY)

MKRTCHYAN, K.A.

USSR/Geology - Rock formation

Card 1/1 Pub. 46 - 9/19

Authors : Mkrtchyan, K. A.

Title : Some notes on the origin of tufas of the Artik type (Armenian SSR)

Periodical : Izv. AN SSSR. Ser. geol. 5, 119 - 126, Sep - Oct 1954

Abstract : The tufa of the Artik region is described as being of a quality intermediate between the usual tufa and lava, so that the name "tufolava" is sometimes applied to it. A study is made of its characteristics in different areas, including its color, and the conclusion is drawn that it is of pyroclastic origin, its formation being analogous to the eruptions of the Katmen volcano. Ten Russian and Soviet references (1899 - 1952). Drawings.

Institution: .....

Submitted: March 15 1953

MKRTCHYAN, K.A.

Pambak complex of fossil mammals. Izv.AN Arm.SSR Ser.geol.i geog.nauk v. 11 no.4:77-82 '58. (MIRA 12:1)

1. Upravleniye geologii i okhrany nedr pri Sovete Ministrov ArmSSR.

(Pambak Valley--Mammals, Fossil)

MKRTCHYAN, Y. A., Cand Geolog-Mineralog Sci diss, -- "The Kazakh [illegible] Sevan tectonic zone of the Lesser Caucasus (stratigraphy, intrusions, tectonics, metallogeny, and history of development)". Yerevan, 1[illegible] [illegible] pr [illegible] of and Protection of Natural Resources USSR, Admin of [illegible] and Protection of Natural Resources of the Council of Ministers Armenian SSR, 200 copies (KL, No 15, 1[illegible], 122)

MKRTCHYAN, K.A.

New data on the upper Eocene age of the transgressive formation of the Loriyskoye synclinoriym in Armenia. Dokl.AN Arm.SSR 31 no.1:49-52 '60. (MIRA 13:9)

1. Upravleniye geologii i okhrany nedr pri Sovete Ministrov Armyanskoy SSR. Predst. chlenom-korresp. AN ArmSSR A.A. Gabriyelyanom.

(Armenia—Geology, Stratigraphic)

MKRTCHYAN, K.A.

Some characteristics in the development of geosynclinal volcanism as exemplified by the Sevan tectonic zone in the Lesser Caucasus. Izv.AN SSSR. Ser.geol.27 no.2:88-93 F '62. (MIRA 15:1)

1. Upravleniye geologii i okhrany nedr pri Sovete Ministrov Armyanskoy SSR, g. Yerevan.
(Caucasus—Geology, Structural)

MKRTCHYAN, K.A.

Quartz-porphyry formations of the Lesser Caucasus. Biu. MOIP. Otd. geol. 37 no.4:78-86 Jl-Ag '62. (MIRA 16:5)
(Caucasus--Porphyry)

MKRTCHYAN, K.A.

Formations o subintrusive trachyandesites in the Sevan [illegible]. Izv. AN Arm. SSR. Nauki o zem. 17 no.[illegible] [illegible]. (MIRA 17:10)

1. Upravleniye geologii i [illegible] Sov. [illegible] Armyanskoy SSR.

MKRTCHYAN, K.A.; AYVAZIAN, S.M.

More about Nagarnorsk mining and metallurgical [illegible] 12p.
Ak Arm. SSR. Nauki o zem. 17 no.5:59-64 '64. [illegible]

1. Upravleniye geologii i okhrany nedr pri Sovete Ministrov Armyanskoy SSR i Ak Armyanskoy SSR.

ARAKELYAN, R.A.; VEGUNI, A.T.; BALYAN, S.P.; SAYADYAN, [illegible]
ASRATYAN, V.P.; BAGDASARYAN, G.P.; MALKHASYAN, E. [illegible]
ARUTYUNYAN, A.R.; ARUTCHYAN, A.G., red.; ASLANYAN, [illegible]
GOGINYAN, V.Y. [illegible], red.; GULYAN, E.Kh., red.; KAZARYAN, [illegible]
MKRTCHYAN, K.A., red.; TSAMERYAN, P.P., red.

[Study of the geology of the U.S.S.R.] Geologicheskaya izuchennost' SSSR. Erevan, Izd-vo AN Arm. SSR Vol. [illegible] 1967. 157 p.