PROKHORCHUK, I.S., prof.; SAMKNULO, G.M., dots.; BOYTSOV, K.P., dots.; NECHUYATOVA, N.P., dots.; POPOV, N.I., dots.; SITKHINA, D.Ye., MITIN, A.G., dots.; SUCHIL'NIKOV, N.G., red.; GOSPODARSKAYA, T.N., red. izd-va; GRECHISHCHEVA, V.I., tekhn. red.

[Economics of the woodworking industry] Ekonomika lesoobrabatyvaiushchei promyshlennosti. Moskva, Goslesbumizdat, 1961. 309 p. (MIRA 15:3)

1. Leningradskaya lesotekhnicheskaya akademiya im. S.M.Kirova (for Prokhorchuk, Boytsov, Nechuyatova, Popov, Sitkhina, Mitin).
2. Vsesoyuznyy zaochnyy lesotekhnicheskiy institut (for Samknulo).
(Woodworking industries)

MITIN, A.; GUS'KOVA, N.

Courses for the improvement of qualifications. Avt. dor. 25 no.2:32 F '62. (MIRA 15:2)

1. Direktor kursov povysheniya kvalifikatsii pri Gosudarstvennom vsesoyuznom dorozhnom nauchno-issledovatel'skom institute Ministerstva transportnogo stroitel'stva SSSR (for Mitin).
2. Zaveduyushchaya aspiranturoy Gosudarstvennogo vsesoyuznogo dorozhnogo nauchno-issledovatel'skogo instituta Ministerstva transportnogo stroitel'stva SSSR (for Gus'kova).
(Technical education)

MITIN, Aleksey Mikhaylovich; GOLOVKIN, V.P., inzhener; SOROKIN, N.N., inzhener, redaktor; KANDYKIN, A.Ye., tekhnicheskiy redaktor.

[Routine maintenance of railroad tracks on a work section] Tekushchee sederzhanie puti na rabochem otdelenii. Moskva, Gos.transportnoe zheleznederezh. izd-vo, 1954. 23 p. (MLRA 8:5)

1. Brigadir puti Orlovskoy distantsii Moskovsko-Kursko-Donbasskoy deregi (for Mitin).
(Railroads—Track)

L 13709-65 EEC(b)-2/EWA(h)/EWA(c)/EWT(1)/EWT(m)/EWP(b)/ /EWP(t) Pl-4/Pz-6/Pab
IJP(c) AO/AT/JD

ACCESSION NR: AP5011338 UR/0020/65/161/005/1124/1126

AUTHOR: Zotov, Yu. A.; Maslov, V. N.; Mitin, A. P.

TITLE: Electromotive force observed in the epitaxial growth of germanium on germanium substrate by transport reaction with water vapor

SOURCE: AN SSSR. Doklady, v. 161, no. 5, 1965, 1124-1126

TOPIC TAGS: semiconductor thin film, germanium thin film, epitaxial vapor growth, chemical transport reaction, close spaced method, electrochemical transport reaction

ABSTRACT: The electromotive force (emf) thermally generated between close-spaced germanium electrodes has been measured and the effect of this emf on the rate of germanium transport has been determined in the process of epitaxial vapor growth of germanium by means of the transport reaction of the Ge source with water vapor. This study was undertaken to explain the electrochemical mechanism of the transport reactions taking place in the epitaxial growth of semiconductor thin films. Experiments were carried out in a horizontal quartz tube in which two single crystal germanium rods (electrodes) were placed end-to-end with 0.3—0.8 mm spacing. A movable heating element made it

Card 1/3

L 43909-65

ACCESSION NR: AP5011538

possible to vary the temperature gradient and therefore the emf between the electrodes. A stream of hydrogen saturated with water vapor was fed through the tube. Characteristic peaks and change in polarity coincident with the change in direction of temperature gradient were shown on plots of the emf and current versus the position of the heating element. A negative charge of the "hot" rod indicated transport of positive charges between the rods, and therefore no thermoionic emission from the Ge surface. The experimental rates of Ge transport at variable current through the source-substrate circuit were much higher than the rates calculated from Faraday's Law. This comparison led to the assumption of a thermoionic mechanism of transport reactions following the equations: $GeO + H^- \rightleftharpoons GeO + H^+ + 2e$ (at the source) and $GeO + 2H^+ \rightleftharpoons Ge + H_2O - 2e$ (at the substrate). This mechanism was confirmed by calculation of the transport rates, which takes into account thermal dissociation of water vapor, and by the fact that the potential of the substrate in relation to that of the source was constantly positive during the growth process. Orig. art. has: 3 figures, 1 table, and 5 formulas. [JK]

Card 2/3 Not to be released OID Oct 69

MITIN, A.T.

RYAZANTSEV, B.S.; MITIN, A.T.; BUZINIER, M.I.; SADOV, I.Ya., redaktor; VERINA, G.P., tekhnicheskiy redaktor.

[Organization of railroad signaling and communications] Organizatsiia khoziaistva signalizatsii i sviazi zheleznykh dorog. Moskva, Gos. transp. zhel-dor. izd-vo, 1952. 318 p. (MLRA 7:11)
(Railroads--Signaling) (Railroads--Communication systems)

MITIN, A.T.

AFANAS'YEV, Yevgeniy Vladimirovich; BUZINIYER, Mikhail Iosifovich; MITIN, Afanasiy Timofeyevich; KHABINSKAYA, Flora Abramovna; KRISHTAL', L.I., red.; BOBROVA, Ye.N., tekhn.red.

[Economics and organization of signaling and communications] Ekonomika i organizatsiia khoziaistva signalizatsii i sviazi. Moskva, Gos.transp.zhel-dor.izd-vo, 1959. 189 p. (MIRA 13:2)
(Railroads--Signaling)
(Railroads--Communication systems)

KITIN, A.V., inzhener; MEREZHKO, V.G., inzhener; RIDEL', N.I., kandidat tekhnicheskikh nauk, redaktor; KHITROV, P.A., tekhnicheskiy redaktor

[Manual for machinists operating railroad freight-lifting cranes] Rukovodstvo mashinistu gruzopod"emnogo krana na zheleznodorozhnom khodu. Izd. 2-e, dop. Moskva, Gos.transp. zhel.-dor. izd-vo, 1955. 234 p. (MIRA 9:3)

(Cranes, derricks, etc.)

MITIN, A.V., inzhener.

Efficient method of loading asbestos cement pipes. Zhel.dor.transp. 39 no.9:79 S '57. (MIRA 10:10)

(Pipe--Transportation)

L 5[011-65 EWT(1)/EPA(s)-2/EEC(k)-2/EWG(v)/FCC/EEC(t) Pe-5/Pae-2/Pt-7 IJP(c)

ACCESSION NR: AM5012979 UR/0044/65/000/003/A091/A091

SOURCE: Ref. zh. Matematika, Abs. 3A500

AUTHOR: Mitin, A. V.

TITLE: Emission of electromagnetic fields in conformally planar gravitational fields

CITED SOURCE: Uch. zap. Kazansk. un-t, v. 123, no. 2, 1963, 130-150

TOPIC TAGS: gravitation field, electromagnetic field, conformal planar field, electromagnetic emission, Einstein equation

TRANSLATION: The Einstein equation containing the cosmological term for conformally planar spaces defined by a pure electromagnetic radiation field with an energy-momentum tensor $T_{ij} = k k_i k_j$ (k_i = isotropic propagation vector) is solved using the known classification according to the groups of motions of conformally planar spaces. A detailed analysis is given of those solutions which allow definite groups of motions. It is shown that these solutions allow motion groups not higher than the third order, and that solutions allowing single-term

Card 1/2

L 51011-65

ACCESSION NR: AR5012979

motion groups cannot be static. M. Yakupov.

SUB CODE: MA, GP ENCL: 00

Card 2/2

L 47305-66 EWT(1)/T/EWP(k) IJP(c) WW/GG

ACC NR: AP6030972 SOURCE CODE: UR/0181/66/008/009/2744/2750

53
52
B

AUTHOR: Mitin, A. V.

ORG: Kazan' Physico-Technical Institute AN SSSR (Kazanskiy fiziko-tekhnicheskiy institut AN SSSR)

TITLE: Effect of ultrasonics on the electron paramagnetic resonance spectrum

SOURCE: Fizika tverdogo tela, v. 8, no. 9, 1966, 2744-2750

TOPIC TAGS: spin phonon interaction, electron paramagnetic resonance, EPR, EPR spectrum, ultrasound, ultrasonics

ABSTRACT: Spin-phonon reaction was used to analyze the effect of ultrasonics on the EPR spectrum. The directions propagation and polarization of ultrasound were so selected as to assure the hamiltonian spin-phonon reaction ($S=1/2$) exclusively with terms having an $\{S_x\}$ operator. Energy absorption was computed using a formula based on the assumption that the external field was stationary. Analysis of the calculations showed that the absorption spectrum contained lines other than the usual EPR spectral peak. A measurement of their intensity permits deter-

Card 1/2

MITIN, B.A.; PASHIN, Yu,D.; KOLEVATOV, V.N.; LOZOVSKIY, V.N.

Exchange of experience. Zav.lab. 28 no.10:1259-1261 '62. (MIRA 15:10)

1. Chelyabinskiy politekhnicheskiy institut(for Mitin). 2. Saratovskiy institut mekhanizatsii sel'skogo khozyaystva imeni Kalinina(for Pashin). 3. Ural'skiy filial AN SSSR(for Kolevatov). (Testing machines)

MITIN, B.A.

Calculating the strength of de[illegible] form[illegible] [illegible] porous medium. Koll.zhur. 25 no.3:348-35[illegible] My-Je '63. (MIRA 17:10)

1. Chelyabinskiy politekhnicheskiy institut.

L 50996-65 EWT(j)/EWP(e)/EWT(m)/EPF(c)/EPF(n)-2/EPR/EWP(t)/EWP(k)/EWP(z)/EWP(b)
PF-4/Pr-4/Pu-4/Pv-4 IJP(c) JD/JW/JG

ACCESSION NR: AP5013327 UR/0148/65/000/005/0145/0147
669.293'715

55
53
B

AUTHOR: Yelyutin, V. P.; Lysov, B. S.; Mitin, B. S.

TITLE: Interaction between niobium and aluminum oxide

SOURCE: IVUZ. Chernaya metallurgiya, no. 5, 1965, 145-147

TOPIC TAGS: niobium, sintered niobium alloy, aluminum oxide containing alloy, aluminum oxide solubility

ABSTRACT: The dependence of the interaction of niobium with Al_2O_3 on the temperature, holding time, and Al_2O_3 content has been investigated. Compositions containing 99.8%-pure niobium and 2, 4, 7, 10, or 15 vol% Al_2O_3 were degassed in vacuum at 975K for 30 min, furnace cooled, and sintered in argon at 1675, 1875, 2075, and 2275K for 2 and 3 hr. The content of metallic aluminum in compositions sintered for 2 hr varied randomly within wide limits regardless of the sintering temperature. A sharp variation in the aluminum content (from 0.08 to 2.10%) was observed in compositions sintered for 3 hr at 1875K. In compositions sintered for 3 hr at 2075 and 2275K, the aluminum content varied from 0.18 to 0.27% regardless of the Al_2O_3 content. This comparatively small scattering in the values of aluminum content in-

Card 1/2

L 50996-65

ACCESSION NR: AP5013327

dicated that under these conditions the reaction approached an equilibrium. In compositions sintered at 1675 and 1875K a correspondingly longer holding time (10 and 5 hr, respectively) was required to achieve equilibrium. The mean equilibrium concentration of aluminum was 0.31, 0.27, 0.22, and 0.18% in alloys sintered at 1675, 1875, 2075, and 2275K. Thus, even such a thermodynamically stable oxide as Al_2O_3 cannot be regarded as an insoluble additive in $Nb-Al_2O_3$ compositions. It can be assumed that a similarly noticeable chemical interaction exists between niobium and other thermodynamically stable oxides (ZrO_2, TiO_2, etc.). Orig. art. has: 1 table. [MS]

ASSOCIATION: Moskovskiy institut stali i splavov (Moscow Institute for Steel and Alloys)

SUBMITTED: 20Jun64 ENCL: 00 SUB CODE: MM

NO REF SOV: 002 OTHER: 009 ATD PRESS: 4014

Card 2/2

L 13561-66 EWT(m)/EWP(t)/EWP(b) IJP(c) JD/JG/WB

ACC NR: AP6001238 SOURCE CODE: UR/0363/65/001/012/2208/2211

AUTHOR: Yelyutin, V. P.; Kostikov, V. I.; Levin, V. Ya.; Maurakh, M. A.; Mitin, B. S.

ORG: Institute of Steel and Alloys (Institut stali i splavov)

TITLE: Wetting of tungsten with liquid aluminum oxide

SOURCE: AN SSSR. Izvestiya. Neorganicheskiye materialy, v. 1, no. 12, 1965, 2208-2211

TOPIC TAGS: tungsten, aluminum oxide, silicon dioxide, molybdenum, METAL FINISHING

ABSTRACT: The wetting of tungsten and molybdenum with liquid Al_2O_3 and of tungsten with a liquid Al_2O_3-SiO_2 mixture was studied by placing a drop of the liquid oxide or mixture on a plate of rolled W or Mo. The drop was allowed to spread, the temperature was quickly lowered, and the area covered by the oxide was measured. A formula was derived for the dependence of this area on the mass of the drop in the absence of interaction between the liquid and solid and for small equilibrium contact angles:

$$m = \rho\pi r^2 \sqrt{k\cos\theta - 2}$$

$$m = \frac{\rho}{\sqrt{\pi}} \sqrt{k\cos\theta - 2} \cdot S^{3/2},$$

where S is the area of spread. S was calculated from this formula for the systems W-Al_2O_3, W-Al_2O_3-SiO_2 and Mo-Al_2O_3, and was compared with the measured values. It was shown that

Card 1/2

UDC: 546.78:532.64

L 13561-66

ACC NR: AP6001238

as the interaction between the solid and liquid increases, the discrepancies between the two sets of values become more appreciable: in the case of Mo-Al_2O_3, the deviations from the calculated curve were much greater than in the case of W-Al_2O_3, because the effective charge of Mo is greater than that of W. Orig. art. has: 3 figures and 6 formulas.

SUB CODE: 11 / SUBM DATE: 05Jul65 / ORIG REF: 002 / OTH REF: 001

Card 2/2

L 43736-66 EWT(m)/EWP(t)/ETI IJP(c) WW/JD/JH/JG

ACC NR: AP6030769 SOURCE CODE: UR/0363/66/002/009/1599/1603

54 B

AUTHOR: Kostikov, V. I.; Mitin, B. S.; Roytberg, M. B.

ORG: Moscow Institute of Steels and Alloys (Moskovskiy institut stali i splavov)

TITLE: Reaction between tungsten and molten aluminum or silicon oxides

SOURCE: AN SSSR. Izvestiya. Neorganicheskiye materialy, v. 2, no. 9, 1966, 1599-1603.

TOPIC TAGS: tungsten compound, aluminum oxide, silicon oxide, TUNGSTEN, CHEMICAL REDUCTION, VAPORIZATION

ABSTRACT: The reaction between tungsten and molten aluminum or silicon oxides at 2300—2700C has been investigated. It was found that the reaction was complex and

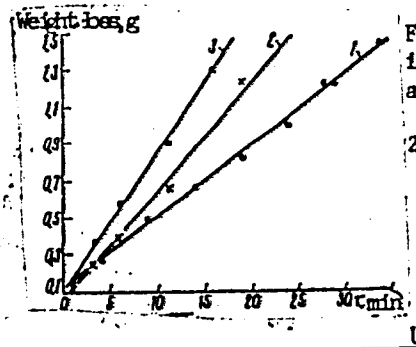

Fig. 1. Time dependence of weight loss into tungsten-molten aluminum oxide system at:

2300C (1), 2500C (2), and 2700C (3).

Card 1/2 UDC: 546.78+546.623-31+546.28

L 43736-66
ACC NR: AP6030769

involved the following processes: reduction of oxides by tungsten, vaporization of reduction products, reaction between the reduction products in the vapor phase, and vaporization and dissociation of oxides. The main factor determining the weight loss in the tungsten-refractory oxide system is vaporization of tungsten oxide. The time dependence of weight loss during the reaction between tungsten and aluminum oxide is shown in Fig. 1. The time dependence for tungsten-silicon oxide reaction follows a similar pattern but the weight loss is less intensive. Orig. art. has: 5 figures. [TD]

SUB CODE: 11, 07/ SUBM DATE: 01Dec65/ ORIG REF: 004/ OTH REF: 004/
ATD PRESS: 5076

hs

Card 2/2

L 27824-66 EPF(n)-2/EWT(m)/ETC(F)/EWG(m)/EWP(t)/ETI WW/JG/JD

ACC NR: AP6015731 (A) SOURCE CODE: UR/0032/66/032/005/0626/0627

AUTHOR: Yelyutin, V. P.; Kostikov, V. I.; Levin, V. Ya.; Maurakh, M. A.; Mitin, B. S.

ORG: Moscow Institute of Steel and Alloys (Moskovskiy institut stali i splavov)

TITLE: Unit for studying the wetting of solids with liquid refractory metals or compounds

SOURCE: Zavodskaya laboratoriya, v. 32, no. 5, 1966, 626-627

TOPIC TAGS: wetting, refractory metal, liquid metal

ABSTRACT: A unit for studying the wetting of solids with liquid refractory metals such as titanium, zirconium, vanadium, chromium, niobium, molybdenum, rhenium, tantalum, and tungsten has been designed and built. The spreading of a molten metal droplet on the solid, the contact angle, and other parameters are recorded by a high-speed motion-picture camera and can also be observed by television. The unit has a water-cooled vacuum chamber where the tested specimen (150 mm long and 50 mm wide) is placed and heated by the electric current to the desired temperature, up to 3000C. At the top of the vacuum chamber, a tiny arc furnace melts the tested metal, a droplet of which is dropped on the tested solid. A shielding gas atmosphere may be used in testing, and the vacuum in the chamber may be varied from $5 \cdot 10^{-5}$ mm Hg at room tempera-

Card 1/2 UDC: 532.23.07

L 27824-66

ACC NR: AP6015731

ture to $1 \cdot 10^{-3}$ mm Hg at 3000C. The specimen temperature is measured by an electron pyrometer. Orig. art. has: 1 figure. [ND]

SUB CODE: 11/ 11/ SUBM DATE: none/ ORIG REF: 001/ ATD PRESS: 5003

Card 2/2

GILELES, Lev Khatskelevich; KOKIN, Georgiy Mikhaylovich, prof.; MITIN, Boris Yefimovich; ROZHANSKIY, Vilen Anatol'yevich; VASIL'YEVA, I.A., red.; LEZHNEVA, Ye.I., red.; UVAROVA, A.F., tekhn.red.

[The MAZ-501 logging truck; construction, service, and repair] Avtomobil'-lesovoz MAZ-501; ustroistvo, obsluzhivanie i remont. Pod red. G.M.Kokina. Moskva, Gos.nauchno-tekhn.izd-vo mashinostroit.lit-ry, 1959. 362 p. (MIRA 12:5)
(Motortrucks--Maintenance and repair) (Lumbering--Machinery)

MITIN, B. Ye.

Determining the moment and friction force acting in the contact plane of an elastic wheel. Sbor.nauch.trud.Bel.politekh.inst. no.64:89-115 '59. (MIRA 13:5)
(Motortrucks--Wheels)

MITIN, B.Ye.

Analysing kinematic diagrams of motor-vehicle turns. Sbor. nauch.trud.Bel.politekh.inst. no.72:3-20 '59.
(MIRA 13:6)

(Motor vehicles--Dynamics)

MITIN, B.Ye.

Sidewise motion of a motor-vehicle wheel. Sbor.nauch.trud. Bel.politekh.inst. no.72:60-81 '59. (MIRA 13:6)
(Motor vehicles--Wheels)

MITIN, F. T.

MITIN, F. T.: "Principles of organizing the economy in the forbidden zones of the river Desna." Min Higher Education Ukainian SSR. Ukrainian Order of Labor Red Banner Agricultural Academy. Kiev. 1956. (Dissertion For the Degree of Candidate in Agricultural in Sciences.)

Knixhnaya letopis', No. 39, 1956. Moscow.

K-4

USSR/Forestry - Forest Management.

Abs Jour : Ref Zhur - Biol., No 5, 1958, 20129

Author : Mitin, F.T.

Inst : Bryanskiy Forestry Institute.

Title : The Application of Forest Typology in Determining Forest Management in the Restricted Zones of the Desna River.

Orig Pub : Sb. aspirantsk. rabot. Bryanskiy lesokhoz. in-t, 1957, No 1, 91-105.

Abstract : On the basis of investigations a number of authors have established the degree of effect of the composition, type and condition of the waterless valley forests on the water system of the Desna River. The best results in the restricted zones were obtained from mixed and complex plantings, noted for their maximal absorption of thawed water and which aid in filtration.

Card 1/2

MITIN, I.G., inzhener.

Automatization of open-hearth furnaces with gaseous fuel.
Metallurg no.3:16-18 Mr '56. (MLRA 9:9)

1. TSentral'naya laboratoriya avtomatiki.
(Open-hearth furnaces) (Automatic control)

18.3200

75946
SOV/133-59-10-7/39

AUTHORS: Mitin, I. G., Voronov, Yu. I.

TITLE: Application of Periscopic Method for the Measuring of Open-Hearth Furnace Roof Temperatures

PERIODICAL: Stal', 1959, Nr 10, pp 893-897 (USSR)

ABSTRACT: At Nizhniy Tagil Metallurgical (Nizhne-Tagil'skiy metallurgicheskiy kombinat) and Magnitogorsk Combines (Magnitogorskiy kombinat), roof surface temperatures are reliably controlled by pyrometers which were installed in September 1950 in the former, and January 1959 in the latter. Luminance temperatures within the 1,400-1,800° C range are measured with a maximum error of ± 18° C (see Fig. 1). The space between the pyrometer top and the roof does not affect readings which are not influenced by changes in the sensitivity of the photoelectric cell caused by the time or by the fluctuation of temperatures in the pyrometer top. The assistance

Card 1/4

Application of Periscopic Method For the Measuring of Open-Hearth Furnace Roof Temperatures

75946
SOV/133-59-10-7/39

of Voronov, Yu. I. (Engineer), and Romanov, K. I. (Foreman), in building the device is acknowledged. The roof pyrometer was designed by the Central Laboratory of Automation (TsLA), in cooperation with the plant, on the basis of a Zaporozh'ye design developed by the Central Design Bureau (TsPKB) on orders of the Central Laboratory of Automation. Conclusions: (1) The pyrometer allows the detection of maximum temperature zones and decreases the effects of the flame on the pyrometer. (2) Two pyrometers should be installed along knuckles. (3) The suggested design eliminates soiling of the device, and maintenance is less time-consuming than in radiation pyrometers. (4) The roof pyrometers are recommended for experimental use in other open-hearth furnaces. In 1959 the Central Laboratory of Automation plans to launch an experimental series of industrial roof

Card 2/4

Application of Periscopic Method For the Measuring of Open-Hearth Furnace Roof Temperatures

75946
SOV/133-59-10-7/39

pyrometers (FEP-5) for several furnaces at Nizhniy Tagil and Magnitogorsk Combines as well as for Chelyabinsk Metallurgical Plant and Plant imeni Dzerzhinskiy (Chelyabinskiy metallurgicheskiy zavod, Metallurgicheskiy zavod imeni Dzerzhinskogo). There are 6 figures; and 8 references, 5 Soviet, 1 French, 1 German, 1 British. The British reference is: Whitehead, E., "Instrumental Practice," 1956, Vol 10.

ASSOCIATION: Central Laboratory of Automation (Tsentral'naya laboratoriya avtomatiki)

Card 3/4

75946
SOV/133-59-10-7/39

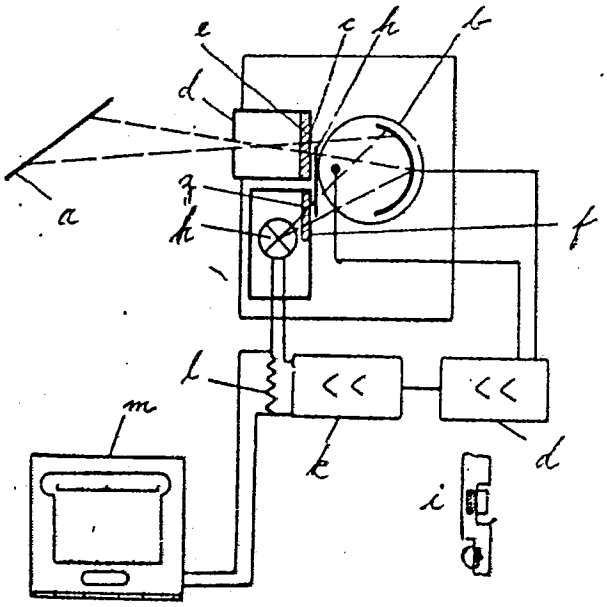

Fig. 1. Schematic diagram of Roof Pyrometer: (a) Roof; (b) StsB-3--type photoelectric cell; (c) and (d) diaphragms (opening in (c) has 0.8--mm diam); (e) red light filter; (f) diaphragm; (g) light filter; (h) tube; (i) vibrating slide valve; (j) amplifier; (k) photosensitive detector; (l) resistor; (m) potentiometer.

Card 4/4

ZRAZHEVSKIY, P.D.; MITIN, I.I.

Automatic temperature control in electric heating furnaces. Vestnik Akad. nauk Kazakh. SSR 8:171-173 '63 (MIRA 17:8)

met. i obog. AN Kazakh. SSR 8:171-173 '63

MITIN, I.I. (Stantsiya Cheremkhovo, Vostochno-Sibirskoy dorogi.)

Portable transformer. Put' i put.khoz. 5 no.9:33 S '61.
(MIRA 14:10)

(Electric transformers)

L 18417-63 BDS

ACCESSION NR: AP3005803 S/0136/63/000/008/0083/0084

49

AUTHORS: Mitin, I. I.; Sokolov, M. A.

TITLE: Hydrodynamic ultrasonic emulsifier

SOURCE: Tsvetnyye metally, no. 8, 1963, 83-84

TOPIC TAGS: metallurgy, emulsifier, hydrodynamic emulsifier

ABSTRACT: Authors describe a new type of hydrodynamic, ultrasonic emulsifier which was developed at the Institute of metallurgy and ore beneficiation, Academy of sciences, Kuz SSR. It employs a multiple-unit whistle. Diagram is shown in the Enclosure. Orig. art. has: 1 figure

ASSOCIATION: none

SUBMITTED: 00 DATE ACQ: 06Sep63 ENCL: 01

SUB CODE: ML NO REF SOV: 000 OTHER: 000

1/2

Card

MOKRYSHEV, A.I.; DADABAYEV, A.Yu.; AKHMETOV, S.F.; MITIN, I.I.

Effect of ultrasonic waves on the ion exchange recovery of thallium and the stability of ionites. Trudy Inst. met. i obog. AN Kazakh SSR 12:95-104 '65. (MIRA 18:10)

L 5191-66 EWT(d)/EWT(m)/EWP(w)/EWP(v)/T-2/EWP(k)/EWA(h)/ETC(m) WW/EM

ACC NR: AP5025064 SOURCE CODE: UR/0286/65/000/016/0108/0108

AUTHORS: Medvedev, V. V.; Feofanov, V. A.; Mitin, I. I.

ORG: none

52
B

TITLE: Ultrasonic hydrodynamic emitter. Class 42, No. 174017

SOURCE: Byulleten' izobreteniy i tovarnykh znakov, no. 16, 1965, 108

TOPIC TAGS: ultrasonic equipment, hydrodynamic shock, nozzle

ABSTRACT: This Author Certificate presents an ultrasonic hydrodynamic emitter of the vortex type, following that of Author Certificate No. 161980. To increase the intensity of the elastic oscillations at large distances from the exit nozzle and to generate electrohydrodynamic shocks in the body of the emitter, a central electrode is added to the equipment. The nozzle serves as the second electrode for the emitter (see Fig. 1).

UDC: 534.232:532.595.2

0901 0771

Card 1/2

L 5191-66

ACC NR: AP5025064

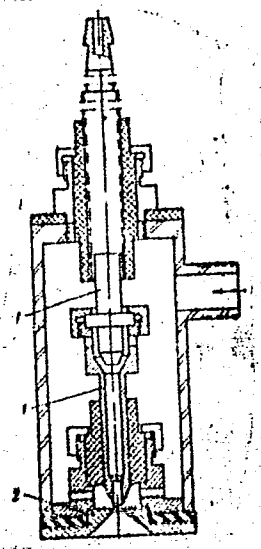

Fig. 1. 1- central electrode; 2- nozzle

Orig. art. has: 1 figure.

SUB CODE: IE/

SUBM DATE: 16Jul64

Card 2/2

MITIN, I. V.

"New polymers with aromatic rings in the chain," a paper presented at the 9th Congress on the Chemistry and Physics of High Polymers, 28 Jan-2 Feb 57, Moscow, Polymer Research Inst.

a

B-3,084,395

MITIN, K.A.

Determining electric parameters for the adjustment of the IU-1 level indicator. Priborostroenie no.11:24-25 N '60. (MIRA 13:11)

(Level indicators)

MITIN, K.S.

Stake markings. Meteor. i gidrol. no.11:46 N '56. (MIRA 10:1)
(Stream measurements)

MITIN, K.S.

Method for the use of Bact. perfrigens toxin in the histochemical study of collagen. Arkh.pat. 22 no.2:73-75 '60. (MIRA 13:12)
(COLLAGEN) (TOXINS AND ANTITOXINS)
(CLOSTRIDIUM PERFRIGENS)

MITIN, K. S., Cand. Medic. Sci. (diss) "Change in Connective Tissue of Walls of Vessels in Rheumatism,(Histo-chemical Investigation)," Moscow, 1961, 18 pp. (Acad. Med. Sci. USSR) 250 copies (KL Supp 12-61, 286).

MITIN, K.S.

Histochemical study of the connective tissue of the blood vessel walls during the active phase of rheumatic fever. Arkh. pat. 23 no. 1:33-40 '61. (MIRA 14:1)
(BLOOD VESSELS) (RHEUMATIC FEVER) (CONNECTIVE TISSUE)

MITIN, K.S. (Moskva)

Electron microscopic histochemical study of experimental myocardial ischemia. Arkh. pat. 27 no.1:40-47 '65. (MIRA 18:4)

1. Laboratoriya gistokhimii (zav. - doktor M.S.Burstone), laboratoriya elektronnoy mikroskopii (zav. - doktor D.J.Dalton) Instituta raka National'nogo instituta zdrdov'ya (Betezda, SShA), kafedra patologicheskoy anatomii (zav. - chlen-korrespondent AMN SSSR zasluzhennyy deyatel' nauki prof. A.I.Strukov) I Moskovskogo ordena Lenina meditsinskogo instituta imeni Sechenova.

MITIN, K.S., assistent

Histochemistry of the vascular walls in rheumatic fever. Trudy 1-go MMI 22:31-51 '63 (MIRA 18:2)

GUL'KEVICH, Yu.F., prof. (Minsk); MITIN, K.S., kand.med.nauk (Moskva)

Reviews. Arkh. pat. 27 no.5:73-76 '65. (MIRA 18:5)

MITIN, L. A., gornyy inzh. (Belovo)

Determination of the parameters for pressure hydraulic transportation of coal and rock mixtures. Ugol' 38 no.4:33-34 Ap '63. (MIRA 16:4)

(Hydraulic conveying)

MITIN, L.I., kapitan 2-go ranga

Navigation security of distant cruises. Mor. sbor. 48 no.8:38-42 Ag '65. (MIRA 18:8)

MITIN, M., akademik

Revolution in natural science. Tekhnol. 31 no.9:17 '63. (MIRA 16:9)

(Matter)

MITIN, M.B.

KOMAROV, V.L., akademik, redaktor; BAYKOV, A.A., akademik, redaktor; VOLGIN, V.P., akademik, redaktor; ORBELI, L.A., akademik, akademik-sekretar', redaktor; BRUYEVICH, N.G., akademik, redaktor; DEBORIN, A.M., akademik, redaktor; ~~MITIN, M.B., akademik~~, redaktor; LEBEDEV-POLYANSKIY, P.I., redaktor; YUDIN, P.F., redaktor

[Central meeting of the Academy of Sciences of the U.S.S.R., October 14-17, 1944; in honor of the President of the Academy, Academician V.L.Komarov, in connection with his 75th birthday and the 50th anniversary of his scientific activity] Obshchee sobranie Akademii nauk SSSR, 14-17 oktiabria 1944 goda; posviashchennoe chestvovaniiu prezedenta Akademii nauk SSSR akademika V.L.Komarova, v sviazi s 75-leniem so dnia rozhdeniia i 50-letiem nauchnoi deiatel'nosti. Moskva, 1945. 260 p. (MLRA 9:11)

1. President Akademii nauk SSSR (for Komarov). 2. Vitse-prezident Akademii nauk SSSR (for Baykov, Bolgin, Orbeli). 3. Chlen-korrespondent Akademii nauk SSSR (for Lebedev-Polyanskiy, Yudin) 4. Akademiya nauk SSSR.
(Komarov, Vladimir Leont'evich, 1869-1945)

PA 1/50T1

USSR/Academy of Sciences Jul 49

"The Directors' Conference of the All-Union Society (Moscow, 11 - 12 June 1949)" 2pp

"Nauka i Zhizn'" No 7

Acad Vavilov presided. A report, "The Present Situation and Measures to Improve the Work of the All-Union Society for the Propagation of Political and Scientific Knowledge," by Acad M. B. Mitin, Vice-Chm of the Board, was discussed by V. P. Komissarenko, Corr Mem, Acad Sci Ukrainian SSR, N. P. Kairov, Cand Hist Sci (Dagestan ASSR), V. G. Machavariani (Georgian SSR),

1/50T1

USSR/Academy of Sciences (Contd 1) Jul 49

Prof A. V. Ablov (Moldavian SSR), N. N. Pozdnyakov, Polytech Museum, Prof A. K. Sangavlo (Molotov), Kanar', Cand Hist Sci (Stalingrad), Corr Mem V. M. Maydebura, Chief Lector of Lipnyazhka Village, Kirovograd Oblast, V. V. Agapov (Leningrad), Prof V. N. Nikitin (Khar'kov), T. S. Gorbunov, Vice-Chm, Board of All-Union Soc, N. A. Mostovoy (TsK VLKSM), L. N. Kustov (Turkmen SSR), Ye. I. Uralova (Belorussian SSR), Yu. G. Mamed-Aliyev, Pres, Acad Sci Azerbaydzhan SSR, and Prof B. V. Lavrovskiy (Moscow). Resolutions were passed on the serious deficiencies in propagandizing towns and rural populations, the quality

1/50T1

USSR/Academy of Sciences (Contd 2) Jul 49

MITIN, M. B.

of lectors and ideology of their lectures, the participation of members in work, mass organization of the intelligentsia, and ideological instruction of workers. It was resolved to start a publishing house called "Znaniye."

1/50T1

MITIN, M. B.

"Against Reactionary Mendelism and Morganism", Collection of articles edited by: M. B. Mitin, N. I. Nuzhdin, A. I. Oparin, N. M. Sisakyan, V. N. Stoletov. Publishing House of the Akad. Nauk, USSR, Moscow-Leningrad, 1950, 350 pp. Rev. by M. F. Nikitenko.

SO: Progress of Contemporary Biology, Vol. 32, 1951, No. 3 (6)

SOV/30-59-1-47/57

M 30(9) M.B.

AUTHOR: Chesnokov, Ye. N., Candidate of Philosophical Sciences

TITLE: Problems Concerning Philosophy of Modern Natural Science (Filosofskiye voprosy sovremennogo yestestvoznaniya)

PERIODICAL: Vestnik Akademii nauk SSSR, 1959, Nr 1, pp 132-138 (USSR)

ABSTRACT: At the end of October last year an All-Union conference took place which dealt with these problems. The conference had been convened by the Akademiya nauk (Academy of Sciences) and the Ministerstvo vysshego obrazovaniya SSSR (Ministry of Higher Education of the USSR). More than 600 well-known experts in the spheres of sciences and philosophy took part, among them Academicians and Corresponding Members, Academy of Sciences, USSR, representatives of the Academies of the Union Republics and Branch Academies as well as scientists from scientific research institutes and universities. Scientific representatives from Bulgaria, Rumania, Germany, Hungary and Czechoslovakia were guests. It was the aim of the conference to unite the creative powers of Soviet philosophers and scientists for the purpose of a dialectic-materialistic generalization of the achievements of modern science and for raising its level which is intended to contribute towards a solution of the most

Card 1/4

SOV/30-59-1-47/57

Problems Concerning Philosophy of Modern Natural Science

important scientific problems in as short a period as possible. Such were the ideas expressed by Academician A. N. Nesmeyanov, President of the AS USSR and K. V. Ostrovityanov, Chairman of the Committee for the Organization of the Conference on the occasion of their opening speeches.

Further, the following reports were heard and discussed:

M. B. Mitin, Academician, spoke about Lenin's "materialism and ~~empiriocriti~~cism" as the great ideological weapon for the perception and transformation of the world.

M. E. Omel'yanovskiy, Academician of the AS UkrSSR, dealt in his report with V. I. Lenin and the philosophical problems of modern physics.

B. M. Kedrov, Doctor of Philosophical Sciences, Corresponding Member, Academy of Pedagogical Sciences RSFSR, reported on the interrelation in nature of the forms of movement of matter.

V. A. Fok spoke about the interpretation of quantum mechanics.

A. D. Aleksandrov, Corresponding Member, Academy of Sciences, USSR, spoke about the philosophical meaning and the importance of the theory of relativity.

Card 2/4

S. L. Sobolev, Academician, and A. A. Lyapunov, Professor,

SOV/30-59-1-47/57

Problems Concerning Philosophy of Modern Natural Science

dealt with cybernetics and natural science.
V. A. Ambartsumyan, Academician, spoke about some methodical problems of cosmogony.
V. A. Engel'gardt, Academician, and G. M. Frank, Corresponding Member, AMS USSR reported on the role of physics and chemistry in investigating biological problems.
A. I. Oparin, Academician spoke about the formation of life in the light of the achievements of modern natural science.
N. I. Grashchenkov's report dealt with the Lenin's reflex theory and modern physiology of the sensual organs.
A. Z. Zhmudskiy opposed the opinion expressed by M. E. Omel'-yanovskiy who said that in the capitalist countries a crisis in physics is approaching.
D. I. Blokhintsev, Ya. Terletskiy, D. D. Ivanenko, T. A. Lebedev, E. Ya. Kol'man, V. V. Perfil'yev took part in the discussion of the report delivered by V. A. Fok.
M. F. Shirokov opposed A. D. Aleksandrov's view concerning the general theory of relativity. V. I. Sviderskiy, A. L. Zel'-manov, A. A. Tyapkin also took part in the discussion of A. D. Aleksandrov's report.
G. I. Naan, A. L. Zel'manov took part in the discussion of the

Card 3/4

SOV/30-59-1-47/57

Problems Concerning Philosophy of Modern Science

report given by V. A. Ambartsumyan.
G. V. Nikol'skiy, P. K. Anokhin, G. V. Platonov took part in the discussion of the report by S. L. Sobolev and A. A. Lyapunov.
V. L. Ryzhkov, N. M. Sisakyan and I. Panchev (Bulgaria) participated in the discussion of the report delivered by V. A. Engel'gardt and G. M. Frank.
Yu. P. Frolov, V. N. Kolbanovskiy, S. L. Rubinshteyn participated at the discussion of the report by N. I. Grashchenkov.
P. N. Fedoseyev, Corresponding Member, Academy of Sciences, USSR concluded the conference. The results obtained at the conference were discussed at a joint meeting of the Prezidium Akademii nauk SSSR (Presidium of the AS USSR) and the Kollegiya Ministerstva vysshego obrazovaniya SSSR (Board of the Ministry of Higher Education of the USSR) on January 2, 1959. Measures were outlined for the intensification of working out philosophical problems of modern science.
There is 1 Soviet reference.

Card 4/4

SOV/25-59-2-9/48

30(7,13)

AUTHOR: Mitin M.B., Academician

TITLE: Man and Nature (Chelovek i Priroda)

PERIODICAL: Nauka i zhizn', 1959, Nr 2, p 24-28 (USSR)

ABSTRACT: On occasion of the Twelfth International Philosophical Congress held in Venice in September 1958, the author develops, on marxist principles, a picture of man in his relation to nature. Man is and remains a member of society; and only as such did he come into possession of the means to master nature. After a multiphase social development he found in socialism his best weapon for the accomplishment of this task. With regard to the surplus population problem, the author argues against Malthusian theories and underlines the theories of the Soviet scientist L.P. Prasolov, according to which about 70% of the land of the earth can be

Card 1/2

Man and Nature SOV/25-59-2-9/48

transformed into cultivated ground. The congress was attended by a Soviet delegation, which consisted of the academician M.B. Mitin, the Associate Member of the AS of USSR F.V. Konstantinov, Professor M.E. Omel'yanovskiy, B.M. Kedrov and many other scientists. There are 3 photos.

Card 2/2

KONSTANTINOV, B.P.; DEBORIN, A.M., akademik; PEYVE, Ya.V.; IOFFE, A.F., akademik; MIKHAYLOV, A.I., prof.; SATPAYEV, K.I., akademik; ZHUKOV, Ye.M., akademik; LAVRENT'YEV, M.A., akademik; SEMENOV, N.N., akademik; PAVLOVSKIY, Ye.N., akademik; MINTS, I.I., akademik; SISAKYAN, N.M.; ROMASHKIN, P.S.; FEDOROV, Ye.K.; STECHKIN, B.S., akademik; MAYSKIY, I.M., akademik; PAVLOV, Todor, akademik; ARBUZOV, A.Ye., akademik; VASIL'YEV, N.V., doktor ekon.nauk; BELOUSOV, V.V.; MITIN, M.B., akademik; BLAGONRAVOV, A.A., akademik; KANTOROVICH, L.V.; RYBAKOV, B.A., akademik; NEMCHINOV, V.S., akademik

Discussion of the address. Vest. AN SSSR 29 no.4:34-63 Ap '59. (MIRA 12:5)

1.Chlen-korrespondent AN SSSR (for Konstantinov, Peyve, Sisakyan, Romashkin, Fedorov, Belousov, Kantorovich).
(Science)

MITIN, M.B., akademik

Growing role of mathematics in science. Tekh.mol. 29 no.9:16-17 '61. (MIRA 14:10)

(Science)

ARZUMANYAN, A.A., akademik; BERG, A.I., akademik; ZHUKOV, Ye.M., akademik; SEMENOV, N.N., akademik; VINOGRADOV, V.V., akademik; FRANTSEV, Yu.P.; SHCHERBAKOV, D.I., akademik; ANISIMOV, I.I.; GATOVSKIY, L.M.; IOVCHUK, M.T.; FEDOSEYEV, P.N., akademik; ROMASHKIN, P.S.; KONSTANTINOV, F.V.; MITIN, M.B., akademik; YELYUTIN, V.P.; PLOTNIKOV, K.N.; PRUDENSKIY, G.A.; YUDIN, P.F., akademik; RYBAKOV, B.A., akademik; KONSTANTINOV, B.P., akademik; KHVOSTOV, V.M.; KEDROV, B.M.; MARKOV, A.A.; BAISHEV, S.B., akademik; ALEKSEYEV, M.N., prof.; SKAZKIN, S.D., akademik; ALEKSANDROV, A.D.; POSPELOV, P.N., akademik

Discussion of L.F. Il'ichev's rreport. Vest. AN SSSR 32 no.12:19-50 D '62. (MIRA 15:12)

1. Chleny-korrespondenty AN SSSR (for Aleksandrov, Frantsev, Anisimov, Gatovskiy, Iovchuk, Romashkin, Konstantinov, Yelyutin, Plotnikov, Prudenskiy, Khvostov, Kedrov, Markov). 2. AN Kazakhskoy SSR (for Baishev).

(Research)

MITIN, M.F., inzh.

Distillation of water by natural freezing. Vod.i san.tekh. no.2:24-27 F '63. (MIRA 16:2)

(Water, Distilled)

MITIN, M.F., insh.

Demineralization of water by the method of natural freezing; from practices in the Virgin Territory. Gidr. i mel. 15 no.2: 20-27 F '63. (MIRA 16:4)

1. Vsesoyuznyy nauchno-issledovatel'skiy institut gidrotekhniki i melioratsii im. Kostyakova.
(Virgin Territory—Saline waters—Demineralization)

KHESIN, Ya.Ye.; SUSHKOV, F.V.; MITIN, M.I.

Single-layer cell culture of the kidney of a cow's embryo under normal cultivation conditions and when inoculated with the smallpox virus. Trudy Mosk. nauch.-issl. inst. virus. prep. 2:280-295 '61. (MIRA 17:1)

MITIN, M.N.

USSR/Cosmochemistry. Geochemistry. Hydrochemistry. D

Abs Jour : Ref Zhur - Khimiya, No. 8, 1957, 26574.

Author : Mitin, M.N.
Inst : All-Union Scientific Research Institute of Mineral Oil and Natural Gas.

Title : Methods of Computation of Age of Water below Mineral Oil Bearing Layers by Contents of Rare Gases in It.

Orig Pub : Tr. Vses. neftegaz. n.-i. in-t, 1956, vyp. 9, 233 - 246.

Abstract : No abstract.

Card 1/1

MITIN, Mikhail Nikolayevich. MELKONYAN, Rafael' Vaganovich; RYABINOK, A.G., red.

[Electrochemical dimensional machining of diesel engine parts] Elektrokhimicheskaia razmernaia obrabotka detalei dizel'noi apparatury. Leningrad, 1964. 16 p. (MIRA 17:9)

MITIN, N.A.

Some problems in the work of the Lokot District Hospital following reorganization. Zdrav. Ros. Feder. 5 no.1:19-22 Ja '61.

1. Glavnyy vrach Loktevskogo rayona Altayskogo kraya.
(LOKOT DISTRICT (ALTAI TERRITORY)--HOSPITALS, RURAL)

MITIN, N.A., PROKHOROV, G.P.

A new method of computing and marking out curvatures with transition curves on automobile highways. Sbor. st. po geog. no.11:53-62 '60. (MIRA 13:8)

(Roads--Surveying)

MITIN, Nikolay Aleksandrovich; PROKHOROV, G.P., kand. tekhn.nauk; VASIL'YEVA, V.I., red.izd-va; ROMANOVA, V.V., tekhn.red.

[Tables for laying out horizontal and vertical circular curves and curvatures with connecting curves on highways] Tablitsy dlia razbivki gorizontal'nykh i vertikal'nykh krugovykh i zakruglenii s perekhodnymi krivymi na avtomobil'nykh dorogakh. Moskva, Gosgeoltekhizdat, 1963. 490 p. (MIRA 17:2)

MITIN, N.A.

USSR/ Physics - Non-elastic collissions

Card 1/1 Pub. 22 - 12/45

Authors : Mitin, N. A. and Grigor'ev, Ye. L.

Title : Non-elastic dispersion of negative π-mesons of 300 Mev energy by complex nuclei

Periodical : Dok. AN SSSR 103/2, 219-222, Jul 11, 1955

Abstract : Experimental measurements of the angular dispersion and energy distribution in the nonelastic collisions of π-mesons of 300 Mev energy with nucleons are described. These measurements were conducted with the help of photo-emulsions 400μ thick, where the π-mesons formed by the bombarding of a graphite target with 670 Mev protons collided with nucleons of the emulsion. Four references: 1 USSR and 3 USA (1954-1955). Graphs.

Institution : The Acad. of Sc., USSR, Institute of Nuclear Problems

Presented by : Academician L. A. Artsimovich, May 5, 1955

MIRIN, N.A., MUKHIN, A.I., OKHRNOV, E.B., PONEDELNYE, B. GRIGOR'YEV, A.I.

Positive pion-proton scattering at energies 176, 200, 240, 270, 307 and 310 MeV (II/49)

CERN-Symposium on High Energy Accelerators and Pion Physics.

Geneva 11-23 June 56
In. Branch #5

MITIN, N.A.

SUBJECT USSR / PHYSICS CARD 1 / 2 PA - 1337

AUTHOR GRIGOR'EV, E.L., MITIN, N.A.

TITLE The Elastic Scattering of Positive Pions with an Energy of 310 MeV by Protons.

PERIODICAL Žurn.eksp.i teor.fis, 31, fasc. 1, 37-39 (1956)

Issued: 9 / 1956 reviewed: 10 / 1956

The differential cross section of the elastic scattering of positive 310 MeV pions by hydrogen was measured by means of nuclear photoemulsions. The electron-sensitive photo plates with an emulsion thickness of 400 μ were irradiated with a bundle of positive pions at the output of a magnetic spectrometer. The mesons were produced by bombarding a paraffin target by a bundle of 660 MeV protons of a synchrocyclotron. The scattering processes were selected by means of a microscope with an immersion objective. The acts of elastic scattering were identified by the following criteria: 1.) Angular correlation between the scattered meson and the recoil proton. 2.) Complanarity. The complanarity condition is explicitly given. 427 scattering processes were found in the sector of dial 10-170° (in the center of mass system). The differential scattering cross section found on the basis of these results has, according to the diagram attached, a minimum at 105°. The total scattering cross section of the positive 310 MeV pions was assumed to be 7.10^{-27} cm^2. (The summation interval was 20°). The differential cross section can be expressed by the first three terms of a LEGENDRE series: $d\sigma/d\Omega = \left[(2,4\pm0,2) + (4,9\pm0,4)\cos\vartheta + (9,3\pm0,7)\cos^2\vartheta\right].10^{-27}\,cm^2/sterad.$

MYTIN, N.A., MUKHIN, A.I., OZEROV, E.B., PONTEKORVO, B.M., GRIGOR'YEV, E.L.

"Positive Pion-Proton Scattering at Energies 176, 200, 240, 270, 307 and 310 MeV," paper presented at CERN Symposium, 1956, appearing in Nuclear Instruments, No. 1, pp. 21-30, 1957