S/169/63/000/002/033/127
D263/D307

AUTHORS: Voskresenskiy, A. I. and Dergach, A. L.

TITLE: Microphysical characteristics of clouds of type St and Sc in the Arctic during the warm part of the year

PERIODICAL: Referativnyy zhurnal, Geofizika, no. 2, 1963, 29, abstract 2B195 (In collection: Issled. oblakov, osadkov i grozovogo elektrichestva, M., AN SSSR, 1961, 101-107)

TEXT: Measurements of the microphysical characteristics of clouds and mists were carried out by the expeditions 'Flying Observatory' during 1956-1957. The work was performed from an ИЛ-12 (IL-12) plane, fitted with modern instruments and equipment required for aerological and microphysical studies of clouds and mists. The expeditions went out in summer-autumn periods into the regions north of 70°N, chiefly over the coastal band of the Ob'-Yeniseyskiy region, but also to the western coast of Taymyr Peninsula, from Dickson Island to Chelyuskin promontory. In stratified and stratified-

Card 1/3

cumulus clouds the expeditions carried out a few hundred vertical soundings, as a result of which a few thousand samples of cloud elements and water contents were obtained. Majority of observations of St and Sc was carried out in sub-zero temperatures (0 to -12°C). The vertical thickness of St and Sc were on the average 200 - 300 and 300 - 400 m respectively. Photography of samples of cloud droplets was carried out by means of a microphotoequipment, consisting of a biological microscope and a Zenith-C camera. Samples were taken from the plane with the aid of the usual cloud sample collector. Mean spectra of cloud drops were thus obtained from St and Sc types. The droplets are characteristically fine; majority of drops fall into the radius range of 2 - 25 μ, and the occurrence of layer drops is extremely rare. Drop sizes vary most strongly in the central and upper parts of the cloud layers. The fundamental difference between the distribution curves in St and Sc is that in stratified clouds the drop spectrum is most nonuniform in the central part of the cloud, whilst in stratified-cumulus clouds maximum nonuniformity is found in the upper part. This difference may be explained by the different positions of these parts

of the clouds in relation to the beginning of inversion. Calculations of drop concentration, performed from drop size spectra and water contents, show that considerably lower drop concentrations exist in St and Sc clouds in the Arctic regions than in similar clouds in moderate latitudes. Over 1300 water content measurements were carried out on clouds and mists, of which >1000 were on St and Sc. From the results it may be concluded that, for the same meteorological conditions, St and Sc clouds in Arctic regions contain considerably less water than corresponding clouds in moderate latitudes. The mean water contents were 0.01 g/m^3 for St and 0.14 g/m^3 for Sc. The water distribution in these clouds was very non-uniform. The greatest water content variations, which reached a few hundred percent on an absolute measure, were noted in central and upper regions of the clouds. Maximum water contents were found, as expected, in the same regions, i.e. at the beginning of inversion. [Abstracter's note: Complete translation.]

SHEVCHENKO, A.A., doktor tekhn. nauk; GULYAYEV, G.I., kand. tekhn. nauk; YURGELENAS, V.A., mladshiy nauchnyy sotrudnik; KITAENKO, V.P., inzh.; DERGACH, A.Ya., inzh.; ZUYEV, I.I., inzh.; KOROBOCHKIN, I.Yu., inzh.

Reduction of stretched thin-walled pipes. Biul. TSNIICHM no.4: 31-33 '58. (MIRA 11:5)

(Pipe) (Rolling (Metalwork))

SOV/133-59-1-15/23

AUTHORS: Rudoy, V.S., Alferova, N.S., Konovalov, V.P., Nesterova, N.N., Korobochkin, I.Yu., Kirvalidze, N.S., Dergach, A.Ya. and Yakimenko, N.S.

TITLE: The Technology of Production of Seamless Tubes from High-alloy Steels Alloyed with Boron (Tekhnologiya proizvodstva besshovnykh trub iz vysokolegirovannykh staley s boron)

PERIODICAL: Stal', 1959, Nr 1, pp 68 - 73 (USSR)

ABSTRACT: Efforts made in 1956 to produce seamless tubes from high-alloy steels containing boron EI769 and EI770 gave negative results but in 1957 after some changes in the technology of smelting the metal, satisfactory results were obtained although there were no substantial changes in the chemical composition of the metal (%, numerator - data for 1957, denominator - for 1956):

	C	Si	Mn	Cr	Ni	W	Ti	B
EI769(Kh13N16TR)	0.08 / 0.07	0.55 / 0.64	1.65 / 1.73	13.7 / 13.7	15.7 / 14.9	- / -	0.81 / 0.90	0.009 / 0.0037
EI770(Kh13N18V2TR)	0.08 / 0.08	0.51 / 0.56	1.58 / 1.90	13.2 / 14.2	19.7 / 19.4	2.34 / 2.10	0.81 / 0.69	0.0023 / 0.0026

The Technology of Production of Seamless Tubes from High-alloy Steels Alloyed with Boron. SOV/133-59-1-15/23

The main characteristics of the technology of smelting metal in 1956 and 1957 differed as follows: a) in 1956, smelting was carried out in a 20-ton arc furnace from a charge containing 40-47% of stainless scrap (the remaining - soft iron and fresh ferroalloys); oxygen was used during melting and oxidising period (500 - 700 m³ per heat); slag and metal were deoxidised before the addition of ferro-chromium and with the addition of ferrotitanium onto the metal freed from slag 15-20 min before tapping; b) in 1957 smelting was carried out in a 4.5-ton arc furnace from a fresh charge containing from 55 to 78% armco iron and corresponding ferroalloys without utilisation of scrap and oxygen; refining under a white slag with the addition of ferrotitanium after the removal of slag 8-10 min before tapping. In both cases the metal was cast in 500-kg ingots. The quality of tube billets 85 mm in diameter in 1957 was higher than in 1956. The microstructure of metal in both cases consisted of austenite with fine intermetallic inclusions, stretched in the form of lines along the direction of rolling. Piercing ability of the steels was tested on conical specimens (Ref 3). The determination of

Card2/5

plasticity and structure of steels was carried out within a temperature range 950 - 1 300 °C. Both steels were found to possess a comparatively high plasticity in the temperature range 975 - 1 075 °C (Figures 1 and 2), higher than for steel 1Kh18N9T. However, the plasticity of the latter steel increases with increasing temperature while for EI769 and 770 it sharply decreases. In hot torsion tests (Figures 3 and 4) the differences in the plasticity of the experimental steels was more pronounced. The resistance to deformation of both steels is similar (Figure 4) but at all temperatures is higher than for 1Kh18N9T steel. In hot torsion tests the loss of plasticity of the experimental steels was less pronounced than in piercing tests. In the first case, loss of plasticity was observed at 1 300 °C and in the second case at 1 250 °C. On the basis of the above investigation the following piercing practice for the industrial conditions was proposed: the temperature of billets before the mill 960-980 °C, piercing temperature 1 100 - 1 120 °C, in addition piercing at 1 140 - 1 150° and 1 180 - 1 200 °C was tested. Hot rolling of tubes

Card3/5

SOV/133-59-1-15/23

The Technology of Production of Seamless Tubes from High-alloy Steels Alloyed with Boron

under industrial conditions is described in some detail. The results obtained are given in Table 1. The inspection of tubes after pickling indicated that for steel EI769 the proposed piercing practice (temperature 1 100 - 1 120 °C) gave the best results. A large-scale rolling of tubes from this steel yielded 90% of good-quality products. Rolling of tubes from steel EI770 was tried at four different temperature ranges (temperature before piercing: 920-980; 980-1 000; 1 020-1 040 and 1 040-1 050 °C - Table 2). Optimum results were obtained at a temperature before piercing of 950 °C. 95% of good-quality tubes was obtained. Mechanical properties of hot-rolled tubes before and after hardening are given in Table 3. Hardening of tubes was carried out from 1 100 °C. The dependence of the consumption of energy, power and heating-up of the metal during piercing on the temperature of the metal before piercing is shown in Figure 6. It is concluded that: 1) boron-containing steels of austenitic class EI769 and EI770 possess a lowered temperature at the beginning of incipient melting of grain boundaries; their optimum plasticity is shifted towards lower temperatures; they

Card4/5

possess high resistance to deformation and heat up intensively during piercing. The resistance to deformation of these steels is higher than of 1Kh18N9T steel which makes their piercing more difficult, particularly that with increasing temperature their plasticity decreases (unlike 1Kh18N9T steel). The developed methods of rolling these steels give quality hot-rolled tubes from EI769 steel without repairs and from EI770 steel with repairs which are usually permitted for high-alloy tubes, providing the metal is produced from fresh charges by the improved (1957) technology. The results of measurements of power consumption and heating up can be utilised for an approximate evaluation of these parameters during piercing of other austenitic steels. There are 6 figures, 3 tables and 6 Soviet references.

Card5/5

Dergach, A. Ya.

3

S/137/61/000/003/013/069
A006/A101

1.1300 also 1415, 1454

AUTHORS: Shevchenko, A.A., Gulyayev, G.I., Yurgelenas, V.A., Kitaenko, V. P., Dergach, A.Ya., Zayev, I.I., Korolchkin, I.Ya.

TITLE: A technology of pipe reduction with tension

PERIODICAL: Referativnyy zhurnal. Metallurgiya, no.3, 1961, 33, abstract 33056 ("Byul. nauchno-tekhn. inform. Ukr. n.-i. trubn. in-t", no.6 - 7, 1959, 15 - 21)

TEXT: VNITI together with the Yuzhnotrubnyy Plant determined the parameters of pipe reduction with tension, in order to assist the pipe-rolling shop in assimilating the given technology. For the first time pipes of 57x2.75; 50x x2.75; 38 x 2.75; and 38 x 2.5 mm with ± 10% tolerances of wall thickness were obtained by hot rolling for the cold drawing shop. The authors investigated and recommended the grooving of rolls of the reduction mill with higher partial deformations.

K. U.

[Abstracter's note: Complete translation.]

Card 1/1

AKIMOVA, Ye.P.; RUDOY, V.S.; SHEVCHENKO, L.N.; NESTEROVA, N.N.;
Prinimali uchastiye: VASILENKO, S.I.; ZUYEV, I.I.; VIL'YAMS, O.S.;
LAGUTINA, R.V.; DERGACH, A.Ya.; KITANENKO, V.P.; KIRVALIDZE, N.S.;
YAKIMENKO, N.S.; SAMOYLENKO, V.D.

Effect of the method of manufacturing EI847 steel on the quality of tubes. Stal' 21 no.12:1113-1114 D '61. (MIRA 14:12)

1. Ukrainskiy nauchno-issledovatel'skiy trubnyy institut (for Akimova, Rudoy, Shevchenko, Nesterova). 2. Nikopol'skiy yuzhnotrubnyy zavod (for Vasilenko, Zuyev, Vil'yams, Lagutina, Dergach, Kitanenko, Kirvalidze, Yakimenko, Samoylenko).
(Steel, Stainless—Electrometallurgy)
(Pipe mills—Quality control)

GULYAYEV, G.I., kand.tekhn.nauk; YURGELENAS, V.A., kand.tekhn.nauk; YEROKHIN, I.N., inzh.; GALITSKIY, B.M., inzh.; DERGACH, A.Ya., inzh.; KIRVALIDZE, N.S., inzh.; KURILENKO, V.Kh., inzh.

Potentialities of pipe reduction in automatic pipe mills. Met.i gornorud.prom. no.5:33-36 S-O '62. (MIRA 16:1)

1. Ukrainskiy nauchno-issledovatel'skiy trubnyy institut i Yuzhnotrubnyy zavod.

(Pipe mills)

S/130/63/000/001/005/008
A006/A101

AUTHORS: Kirvalidze, N. S., Dergach, A. Ya., Samoylenko, V. D.

TITLE: Improving heat treating conditions for pipe blanks

PERIODICAL: Metallurg, no. 1, 1963, 27 - 28

TEXT: At the Nikopol' Yuzhnotrubnyy Plant a new method of preheating the metal in continuous and annular furnaces was brought into use. The metal is subjected to intensified heating with natural gas when it enters the furnace; the temperature drops at the furnace end. The temperature of a 1 X18 H9 T (1Kh18N9T) steel blank was 1,160°C in the center of the blank; it was attained when the blank was approximately in the middle of the furnace, where the metal was held for an extended period of time at optimum temperature. Under these heating conditions overheating of the metal was prevented. The specific duration of heating was 8 - 10 min/cm of the blank diameter against 6.5 - 7.0 min/cm previously. Rejects were reduced by about a factor of 1.5 and the efficiency of the unit increased by up to 30%.

ASSOCIATION: Nikopol'skiy yuzhnotrubnyy zavod (Nikopol' Yuzhnotrubnyy Plant)

Card 1/1

CHEKMAREV, A.P., adademik; GRUDEV, A.P., kand. tekh.nauk; TARAN, Yu.N., kand. tekhn.nauk; ZIL'BERG, Yu.V., inzh.; KUNILENKO, V.Kh., inzh.; DERGACH, A.Ya., inzh.; LITINSKIY, D.M., inzh.; NESTEROVA, G.V., inzh. SAMOYLENKO, V.D., inzh.

Reducing metal sticking on the rolls during the hot rolling of stainless tubes. Stal' 23 no.7:631-635 Jl '63. (MIRA 16:9)

1. AN UkrSSR (for Chekmarev).
(Pipe mills) (Steel, Stainless)

L 52327-65 EWP(o)/EWP(k)/EWP(z)/EWA(c)EWT(d)/EWT(m)/EWP(b)/T/EWA(d)/EWP(1)/EWP(v)/EWP(t) Pf-4 MJW/JD/HW

ACCESSION NR: AP5015605 UR/0133/64/000/012/1117/1119

AUTHOR: Kirvalidze, N.S.(Engineer); Korobochkin, I.Yu.(Engineer); Kurilenko, V. Kh.(Engineer); Dergach, A.Ya.(Engineer); Onishchenko, M.P.(Engineer); Samoylenko, V.D.(Engineer)

31
30
B

TITLE: Increasing the productivity of an automatic installation for rolling Kh18N10T tubing 14 14

SOURCE: Stal', no. 12, 1964, 1117-1119

TOPIC TAGS: pipe, steel, metal rolling

Abstract: The piercability of Kh18N10T steel is sharply improved by increasing the mandrel slope up to 11° (critical reduction here reaches 13%, what a a slope angle of 9°—only around 10%).

Laboratory and industrial experiments showed that the mandrel rpm's (in the range of 70-140 rpm) have little effect on the piercability of this steel. Increasing the number of rpm's of the mandrel made it possible to increase productivity by 15% for high-quality tubing. 14

Card 1/2

L 52327-65

ACCESSION NR: AP5015685

The main factor, affecting the internal surface quality of castings, for a change of rpm, is the degree of strengthening and weakening processes. At substantially high rates of deformation the processes of weakening do not have time to occur and, therefore, a change of rpm of the mandrel in the piercing of Kh18N10T billets does not affect pierceability. Orig. art. has 2 figures and 3 formulas.

ASSOCIATION: Nikopol'skiy yuzhnotrubnyy zavod (Nikopol' Yuzhnotrubnyy Plant)

SUBMITTED: 00 ENCL: 00 SUB CODE: MM, IE

NO REF SOV: 005 OTHER: 000 JPRS

Card 2/2

DERGACH, G.I.; GUBNITSKAYA, Ye.S.

N-phosphorylated derivatives of cyanoformic and oxalic acids.
Zhur. ob. khim. 35 no.6:1009-1014 Je '65. (MIRA 18:6)

1. Institut organicheskoy khimii AN UkrSSR.

OSHEROV, S.Ya., kand.tekhn.nauk; BORISOV, V.P., inzh.; DERGACH, V.F., inzh.

GTU-15 gas turbine system manufactured by the "Ekonomaizer" factory. Energomashinostroenie 9 no.8:8-11 Ag '63. (MIRA 16:8)
(Gas turbines)

OSHEROV, S.Ya., kand. tekhn. nauk; DERGACH, V.F., inzh.; LIBENSON, M.N., inzh.

Determination of thermodynamic indices of gas turbine systems. Energomashinostroenie 10 no.2:46-47 F '64. (MIRA 17:6)

BEZTSENNYY, Viktor Ivanovich, inzh.; PETROV, Vasiliy Afanas'yevich, kand. tekhn. nauk; SAKHAROV, Mikhail Borisovich, inzh.; TUROVTSEV, Vasiliy Ivanovich, kand. tekhn. nauk. Prinimal uchastiye CHERNYSHEV, P.N., inzh.; KHUDOKORMOV, V.I., inzh., retsenzent; EVIN, G.D., inzh., retsenzent; DERGACH, Ye.S., inzh., retsenzent; GROKHOL'SKIY, N.F., kand. tekhn. nauk, retsenzent; NIKOLAYEV, K.I., kand. tekhn. nauk, retsenzent; SMARAGDOV, G.I., kand. tekhn. nauk, retsenzent; ZOLOTNIKOV, I.M., kand. tekhn. nauk, retsenzent; VISHNYAKOV, B.I., aspirant, retsenzent; ARSHINOV, I.M., inzh., red.; MEDVEDEVA, M.A., tekhn. red.

[Car repairing at factories] Remont vagonov na zavodakh. By V.I.Beztsennyi i dr. Moskva, Vses.izdatel'sko-poligr. ob"edinenie M-va putei soobshcheniia, 1961. 363 p. (MIRA 14:12)

1. Kafedra "Vagony i vagonnoye khozyaystvo" Leningradskogo instituta inzhenerov zheleznodorozhnogo transporta (for Grokhol'skiy, Nikolayev, Smaragdov, Zolotnikov)
(Railroads--Cars--Maintenance and repair)

DERGACHEV, A., kand.ekon.nauk

Principles of rhythmic operations in automobile repair shops. Avt. transp. 38 no. 5:27-29 My '60. (MIRA 14:2)
(Motor vehicles--Maintenance and repair)

L 05593-67 EWT(1) GW/GD
ACC NR: AT6005057 (N) SOURCE CODE: UR/0000/65/000/000/0092/0099

AUTHOR: Dantsig, L. G.; Dergachev, A. A.; Ivashchenko, A. I.

ORG: none

TITLE: Experience in using the point sounding method in analyzing seismological data for the Altay-Sayan region

SOURCE: AN SSSR. Sibirskoye otdeleniye. Institut geologii i geofiziki. Metodika seysmorazvedki (Methods of seismic prospecting). Moscow, Izd-vo Nauka, 1965, 92-99

TOPIC TAGS: seismology, seismic wave, body wave, point shooting, ~~discontinuity~~, crustal thickness, earthquake, Mohorovicic Discontinuity, Seismic Prospecting / Altaye-Sayanskaya Oblast

ABSTRACT: The depth of the Mohorovicic discontinuity under the Altay-Sayan region has been determined using the data registered from industrial explosions and near earthquakes (1960 through 1963). Five temporary seismic stations in the Kuzbass were used from January 1960 through May 1961, 2 from May until July 1962, and six after July 1962, with as many as 14-15 operating simultaneously at times when field parties other than those directed by the authors supplied data. For the first time in the Soviet Union, the data were analyzed by a variant of the point seismic sounding method originally developed for seismic

Card 1/3

ACC NR: AT6005057

prospecting. Advantages of this method over the Nersesov method used previously (Jeffreys-Bullen travel-time tables) are that there is no need to know the properties of the medium through which the seismic waves are propagated and the fact that the only requirement is that head waves of the P_n and S_n types are formed at the Moho discontinuity. A drawback of the method is inability to use data registered from distant earthquakes. Most of the data were registered from industrial shooting, with epicentral distances accurately known to within 1.0—1.5 km; the maximum error in determining shot times did not exceed ± 0.5 sec. A summary travel-time curve, constructed for these shots within intervals of 60 km < Δ < 500 km for $\bar{P}$ waves and Δ < 700 km for P_n waves, showed that average velocities were 6.1 km/sec for $\bar{V}$ and 80 km/sec for V_n (mean error not exceeding ± 0.1 km/sec in either case). Earthquake data were processed in a similar manner, with most epicenters determined by several methods and checked by the method of intersections for $\bar{S}$—$\bar{P}$, $\bar{S}$, occasionally for $\bar{P}$. The number of stations and their even spacing made it possible to establish epicentral distances of ± 10 km for near earthquakes and ± 15—20 km for the more distant stations when all of the stations were on one side of an epicenter. Separate travel-time curves were constructed for each earthquake (about 50 epicenters having a focal energy of more than 10^{10} joules); these curves were then collated into a summary curve. A total of 190 points for $\bar{P}$ waves and 94 for P_n waves were analyzed, the averaged velocities amounting to

Card 2/3

L 06598-67
ACC NR: AT6005057

$\bar{V}$ = 6.1 ± 0.1 km/sec and V_n = 8.1 ± 0.1 km/sec. A chart, compiled to depict the depths of the Moho determined by the new method shows the earth's crust to vary in depth between 36 and 50 km, averaging 43 km in the region. The discontinuity tends to dip toward the southeast. Orig. art. has: 4 figures. [ER]

SUB CODE: 08/ SUBM DATE: 30Sep65/ ORIG REF: 005

Card 3/3

DERGACHEV, A. F.

Planning and operating estimates in automobile repair enterprises. Moskva, Izd-vo Ministerstva kommunal'nogo khoziaistva RSFSR, 1950. 192 p. (52-23312)

TL35.D4

DERGACHEV, A. F.

Ways of reducing the cost of overhauling an automobile. Avt.transp. 32 no.8:7-8 Ag '54. (MLRA 7:11)
(Automobiles--Repairing)

25(5) PHASE I BOOK EXPLOITATION SOV/2500

Dergachev, Aleksandr Fedorovich, Candidate of Economic Sciences

Organizatsiya i planirovaniye predpriyatiy po remontu avtomobiley i dorozhnykh mashin (Organization and Planning of Automobile and Road Machinery Repair Shops) Moscow, Avtotransizdat, 1958. 303 p. Errata slip inserted. 3,500 copies printed.
(Title page):
Ed.: G. V. Teplov, Doctor of Economic Sciences, Professor;
Ed. (Inside book): V. I. Yablokov; Tech. Ed.: N. V. Mal'kova.

PURPOSE: This textbook is intended for students of automobile and highway institutes. It may also serve as a manual for engineering and technical personnel engaged in automobile transport.

COVERAGE: This textbook outlines principles of economics and organization of maintenance and repair establishments. It reviews such topics as the preparation of maintenance and repair operations, organization of technical control, administration of work and wages, organization of supply and tool control systems, and plant transportation. Problems in intraplant planning, cost accounting, and accounting are discussed. The final chapter presents an

Card 1/9

analysis of the economic activities of maintenance and repair establishments. No personalities are mentioned. There are no references.

TABLE OF CONTENTS:

14(9) SOV/143-59-3-18/20

AUTHOR: Tung Yü-hsing, Engineer

TITLE: Problems in Controlling Complex Utilization Water Reservoirs (Voprosy regulirovaniya vodokhranilishch kompleksnogo ispol'zovaniya)

PERIODICAL: Izvestiya vysshikh uchebnykh zavedeniy - Energetika, 1959, Nr 3, pp 141-149 (USSR)

ABSTRACT: In China, the monsoons control the rain periods which cause floods on many rivers. Available data show that changes in intensity and duration of floods are closely connected to the season. For example, on the Huang-ho river, floods in July and August are characterized by a brief duration with a high peak, while in September and in October the floods have a longer duration but lower peaks. The seasonal character of these floods provides the possibility of using a variable volume water reservoir for suppressing floods during the entire year and for increasing the installed capacity and power production of hydro-electric power plants. Therefore, the author presents calculations for methods of controlling water reservoirs which

Card 1/2

AVAILABLE: Library of Congress (TL152.D395)

Card 9/9

JG/ec
12-2-59

DERGACHEV, A.F., dots.

Technical and economic problems in the development of the automobile repair industry. Trudy MADI no.24:35-51 '58. (MIRA 11:12)

(Automobiles--Maintenance and repair)

DERGACHEV, A.F., dots.

Methods for determining the value of the automobile repair industry output. Trudy MADI no.24:52-58 '58. (MIRA 11:12)
(Automobiles--Maintenance and repair)

DERGACHEV, A., kand.ekonomicheskikh nauk; ROZENBERG, L., kand.tekhn.nauk; ~~ERIOMIVSKIY~~, Z., inzh.

Technical and economic expediency of repairing motor-vehicle parts. Avt.transp. 38 no.9:27-29 S '60. (MIRA 13:9)
(Motor vehicles--Maintenance and repair)

DERGACHEV, A.F., dotsent, kand.ekon.nauk

Technical and economic efficiency of various forms of the organization of motor-vehicle repair shops. Trudy MIEI no.16: 132-144 '61. (MIRA 14:12)
(Motor vehicles--Maintenance and repair)

DERGACHEV, Aleksandr Fedorovich; YABLOKOV, V.I., red.; GORYACHKINA, R.A., tekhn. red.

[Principles of the economics of automobile repair production] Osnovy ekonomiki avtoremontnogo proizvodstva. Moskva, Avtotransizdat, 1963. 102 p. (MIRA 16:4)
(Automobiles—Repairing)

DERGACHEV, A.F., kand. ekonom. nauk

Stimulate the increase in reliability and durability of motor vehicles. Avt. prom. 29 no.11:1-3 N '63. (MIRA 16:12)

1. Moskovskiy avtodorozhnyy institut.

DERGACHEV, A.F.; TROITSKIY, Kh.L.; SHABASHOV, Ya.I., inzh., red.

[Economics of construction and road machinery manufacturing] Ekonomika stroitel'nogo i dorozhnogo mashinostroeniia. Moskva, Mashinostroenie, 1964. 336 p. (MIRA 17:12)

17(8) SOV/[illegible]

AUTHOR: Dergachev, L.P., Guards Lieutenant-Colonel of the Medical Corps

TITLE: An Installation for Desaturation

PERIODICAL: Voyenno-meditsinskiy zhurnal, 1959, No. [illegible], p. [illegible] (USSR)

ABSTRACT: A new installation (95 x [illegible] x 80) [illegible] for [illegible] saturating the organism of nitrogen. [illegible] placed [illegible] a barochamber. Inside the [illegible], four [illegible] type devices are mounted. [illegible], an emergency valve leads outside. Behind of the [illegible] are 4 openings for the outlet of the oxygen hose (KSh-10). For elevations in a movable barochamber a "long [illegible]-mat" type, or a KP-19 type oxygen [illegible], or the KSh-10 hose is proposed. The new device is now being tested.

Card 1/1

DERGACHEV, F.V.

KUKIN, Georgiy Nikolayevich, doktor tekhnicheskikh nauk, professor; ~~DERGACHEV, F.V.,~~ retsenzent; LIOZNOV, A.G., redaktor; EL'KINA, E.M., tekhnicheskiy redaktor

[Uniformity of fineness of raw silk] Ravnomernost' shelka-syrtsa po tonine. Moskva, Gos. nauchno-tekhn. izd-vo Ministerstva promyshlennykh tovarov shirokogo potrebleniia SSSR, 1954. 138 p. (MLRA 8:4)
(Silk)

1ST AND 2ND ORDERS

PROCESSES AND PROPERTIES INDEX

3RD AND 4TH ORDERS

M

Dergalschew, Ivan Anatoljewitsch. *The Principles of Metal Science.* [In Russian.] Pp. 207. 1937. Moscow and Leningrad: Onti. (Rbl. 2.50.)

COMMON ELEMENTS

OPEN

MATERIALS INDEX

ASM-SLA METALLURGICAL LITERATURE CLASSIFICATION

1. DERGACHEV, I. A.

2. USSR (600)

4. Technology

7. Structure, properties, and methods of studying metals and alloys. Moskva, Metallurgizdat, 1952.

9. Monthly List of Russian Accessions, Library of Congress, January, 1953. Unclassified.

BORISOV, Vasiliy Ivanovich; DERGACHEV, I.A., red.; SHAROVA, Ye.A., red. izd-va; GRIGORCHUK, L.A., tekhn. red.

[Laboratornyi praktikum po metallovedeniiu i termicheskoi obrabotke. Moskva, Izd-vo "Vysshaia shkola," 1962. 151 p. (MIRA 15:5)

(Physical metallurgy) (Metals—Heat treatment)

BARABANOV, V.F.; TOMAKOV, P.I.; DERGACHEV, I.I.

Open-pit system for mining steep and inclined seams with filling of worked-out areas with barren rock. Ugol' 34 no.12:6-8 D '59. (MIRA 13:4)

1. Glavnyy inzhener tresta Prokop'yevskugol' (for Barabanov). 2. Glavnyy inzhener kar'yera No.8 (for Tomakov). 3. Zamestitel' glavnogo inzhenera kar'yera No.8 (for Dergachev)
(Kuznetsk Basin--Strip mining) (Mine filling)

DERGACHEV, I.I., gornyy inzh.

Baring and mining out of deep levels in Kuznetsk Basin open pit mines. Ugol' 37 no.2:19-21 F '62. (MIRA 15:2)

1. Razrez No.8 tresta Prokop'yevskugol'.
(Kuznetsk Basin—Strip mining)

DERGACHEV, I. S.

USSR/Medicine - Streptomycin Sep/Oct 48
Medicine - Tuberculous Meningitis, Therapy

"Course of Tuberculous Meningitis in Children, Treated with Streptomycin," KH. S. MARTINSON, Cand Med Sci, L. M. Pechuk, I. S. Dergachev, Tuberculosis Dept, Inst of Pediatrics, Acad Med Sci USSR, 6 pp

"Pediatriya" No 5

In 1947 Institute treated 30 children (age 4 months - 12 years) for meningitis, using Acad Shtern's method. Three recovered, 19 died, and eight are still treated for chronic tubercular meningo-encephalitis. Describes course of disease, with special reference to a new clinical form unknown before use of streptomycin.

PA 34/49T61

DERGACHEV, I. S. PHYSICIAN Doc Med Sci

Dissertation: "Pathology of Secondary Pneumonias in Children of Early Age in the Light of Functional Dats on Lung Tissue.

28 March 49

Second Moscow State Medical Inst imeni

I. V. Stalin

SO Vecheryaya Moskva
Sum 71

DERGACHEV, I.S.

Pathology and morphology of the vascular-and connective tissues barriers in toxic states. Pediatriia, Moskva No.3:21-25 May-June 50.

1. Of the Deaprtment of General Pathology of the Institute of Pediatrics of the Academy of Medical Sciences USSR (head of Department Prof. N.M.Nikolayev; Director of Institute -- G.N.Speranskiy).

DEMIANOV, I. S.

K patogenezu vtorichnykh pnevmonii u detei rannego vozrasta v svyazi s funktsional'noy sostoyaniem legochnoi tkani. (Eksperimental'nye i morfologicheskie issledovaniia) [Pathogenesis of secondary pneumonias in young children in relation to the functional condition of lung tissue; experimental and morphological research]. Moskva, 1953. 99 p. (Akad. med. nauk SSSR).

SO: Monthly List of Russian Accessions, Vol. 7, No 4, July 1954.

~~DERGACHEFF I. S.~~ DERGACHEV, I.S.

*The pathological morphology and pathogenesis of streptomycin-treated meningo-encephalitis (Russian text) PEDIATRIJA 1953, 5 (6-12)

Investigations on 100 autopsy cases (children) gave the following results. A group of 17 cases of pulmonary tb showed some degree of hyperaemia, infiltration and proliferation of connective tissue cells in the meninges and brain. Four cases of pulmonary tb with early meningo-encephalitis showed necrosis of fresh and older haemorrhagic foci and stasis in the small vessels, karyocytolysis in the cortex and other signs of encephalitis. A group of 39 cases of acute meningo-encephalitis showed inflammatory processes in the white matter of the subthalamic region, perivascular lymphoid and plasma cell infiltration, degeneration and destruction of nerve cells, glial proliferation, vascular changes, softening and severe damage in the cortical layer with karyolysis and cytolysis. The ependyma of the ventricles also showed severe lesions. The pia mater showed acute exudative foci of inflammation and marked vascular degeneration. Cases of chronic meningo-encephalitis showed adhesions and inflammation occasionally involving the white matter, considerable cicatrization in the thalamic region, and vascular thrombosis without degenerative changes. The findings do not differ to any significant extent from those reported by western authors. Frey - Berlin (XV, 5, 7,8)

SO: Excerpta Medica; Section V Vol 7 No 12

DERGACHEV, I.S.

Some problems in the pathogenesis of dysentery in infants.
Pediatriia no.4:14-20 Jl-Ag '54. (MLRA 7:10)

1. Iz patologoanatomicheskogo otdeleniya (zav. prof. I.S.Dergachev) Instituta pediatrii AMN SSSR (dir. prof. M.N.Kazantseva)
(DYSENTERY, in infant and child, pathogen.)

DERGACHEV, I.S.

DVIZHKOV, P.P., otvetstvennyy redaktor; AVTSYN, A.P., redaktor; VINOGRADOVA, T.P., redaktor; DERGACHEV, I.S., redaktor; KNYAZEVA, G.D., redaktor; PALEYES, L.O, redaktor; RAPOPORT, Ya.L., redaktor; SMOL'YANNIKOV, A.V., redaktor; UGRYUMOV, B.P., redaktor; SHTERN, R.D., redaktor; KOMAROVA, Z.N., redaktor; ZAKHAROVA, A.I., tekhnicheskiy redaktor

[Proceedings of the All-Union Conference of Pathoanatomists, Leningrad, July 4-9, 1954] Trudy Vsesoiuznoy konferentsii patologoanatomov 4-9 iiulia 1954 g. Leningrad. Moskva, Gos. izd-vo med. lit-ry, 1956. 411 p. (MIRA 10:3)

1. Vsesoyuznaya konferentsiya patologoanatomov. Leningrad, 1954.
(ANATOMY, PATHOLOGICAL—CONGRESSES)

2

Pathomorphology of the central nervous system during experimental scurvy, hypovitaminosis and during intake of large doses of ascorbic acid. M. A. Izrail'skaya and I. S. Dergachev (Pediatric Inst., Acad. Med. Sci. U.S.S.R., Moscow). *Voprosy Pitaniya* 15, No. 5, 72-7(1956).—The results obtained on guinea pigs indicate that during exptl. scurvy or vitamin C hypovitaminosis dystrophic-necrobiotic processes take place in the central nerve system characterized by caryocytolysis and dystrophy of nerve cells. The wrinkling of the nerve cells is particularly pronounced in the frontal and temple parts of the cerebrum and in the Purkinje cells of cerebellum. Plethora, diapedesis, endothelial proliferation of the capillary blood vessels, and proliferation of micro- and oligodendroglia cells occur often in the brain tissue. In a series of young animals there occurs productive meningoencephalitis. These pathol. changes are more evident in young animals than in old ones. The animals receiving 4 and 50 mg. ascorbic acid showed pathol. changes. Only a dose as high as 200 mg./animal/day could maintain the normal morphology of brain tissues.

R. Wierbicki

YARUSOVA, N.S.; DERGACHEV, I.S.; SELIVANOVA, V.M.; LAPINA, S.A.

Physiological effect of vitamin P-like substances. Vit. res. i ikh isp. no.4:92-97 '59. (MIRA 14:12)

1. Institut vitaminologii Ministerstva zdravookhraneniya SSSR, Moskva.

(VITAMINS—P)

ZAPROMETOV, M.N.; YEROFEYEVA, N.N.; DERGACHEV, I.S.; POTAPOVA, I.N.

Nontoxicity of increased doses of the vitamin P preparation (a catechin complex) in a prolonged experiment. Vit. res. i ikh isp. no.4:135-139 '59. (MIRA 14:12)

1. Institut fiziologii rasteniy im. K.A.Timiryazeva AN SSSR; Institut biokhimii im. A.N.Bakha AN SSSR i Institut pediatrii Akademii meditsinskikh nauk SSSR, Moskva.
(VITAMINS--P)

DERGACHEV, I.S., prof.; POTANOVA, I.N., kand.med.nauk; MIKHEYEVA, G.A.; VOLKOVA, T.N.

Some problems in the mechanism of action of biomycin (chlortetracycline). Report No.1: Effect of chlortetracycline on rabbits of different ages in relation to the dose, length of use, and method of administration. Pediatriia no.9:50-56 '61. (MIRA 14:8)

1. Iz Instituta pediatrii AMN SSSR (dir. - prof. O.D. Sokolova-Ponomareva).

(AUREOMYCIN)

DERGACHEV, I. S., prof.; POTAPOVA, I. N., kand. med. nauk

N. P. Gundobin, one of the pioneers of scientific pediatrics.
Pediatriia no.11:79-82 '61. (MIRA 14:12)

1. Iz Instituta pediatrii AMN SSSR (dir. M. Ya. Studenikin)

(PEDIATRICS) (GUNDOBIN, NIKOLAI PETROVICH, 1860-1908)

BRAGINSKAYA, V.P.; DERGACHEV, I.S.

Clinical aspects and pathomorphology of lesions of the heart in whooping cough complicated by pneumonia. Pediatriia no.2:34-39 '62. (MIRA 15:3)

1. Iz infektsionnogo otdela (zav. - prof. S.D. Nosov) i laboratorii patomorfologii (zav. - prof. I.S. Dergachev) Instituta pediatrii (dir. - dotsent M.Ya. Studenkin) AMN SSSR.
(WHOOPING COUGH) (PNEUMONIA) (HEART--DISEASES)

DERGACHEV, I.S.; POTAPOVA, I.N.; MIKHEYEVA, G.A.

Effect of chlortetracycline on the course of staphylococcal infection in an experiment. Antibiotiki 7 no.1:65-68 Ja '62. (MIRA 15:2)

1. Institut pediatrii AMN SSSR.
(STAPHYLOCOCCAL DISEASE) (AUREOMYCIN)

DERGACHEV, I.S.; POTAPOVA, I.N.; BEREZOVSKAYA, N.N.

Effect of vitamins C and P on the endocrine glands of guinea pigs. Vop. pit. 22 no.2:66-70 Mr-Ap '63. (MIRA 17:2)

1. Iz otdela vitaminov C i P (zav. - prof. N.S. Yarusova) Instituta vitaminologii Ministerstva zdravookhraneniya SSSR, Moskva.

DERGACHEV, I.S.; POTAPOVA, I.N.; BEREZOVSKAYA, N.N.

Effect of rutin on the endocrine glands under experimental conditions. Vop. pit. 22 no.4:53-56 Jl-Ag '63. (MIRA 17:10)

1. Iz otdela vitaminov C i P (zav. - prof. N.S. Yarusova) Gosudarstvennogo nauchno-issledovatel'skogo instituta vitaminologii Ministerstva zdravookhraneniya SSSR, Moskva.

DERGACHEV, I.S.; POTAPOVA, I.N.; BEREZOVSKAYA, N.N.

Effect of a catechin preparation on the endocrine glands of white rats kept on a casein diet. Report No. 1 Biul MOIP. Otd. biol. 68 no.4:141-143 Jl-Ag '63. (MIRA 16:10)

DERGACHEV, Ivan Sergeyevich; POTAPOVA, I.N., red.

[Pathological anatomy and the pathogenesis of diseases of the newborn, nursing infants and young children; selected chapters] Patologicheskaia anatomiia i patogenez boleznei novorozhdennykh, detei grudnogo i rannego vozrasta: izbrannye glavy. Moskva, Meditsina, 1964. 341 p. (MIRA 17:11)

KLIMANSKIY, V.A.; SPOROV, O.A.; DERGACHEV, I.S.; SCHASTNYY, S.A.

The condition of the lesser circulation in non-specific pulmonary fibrosis in children. Cesk. pediat. 20 no.3:383-385 Mr '65

M

COUNTRY : USSR
CATEGORY : Cultivated Plants.
Grains. Legumes. Tropical Cereals.
ABS. JOUR. : Referat. Zh., No. 3, 1959, No. 10869

AUTHOR : Dergachev, K.V.
INST. : Krasnoyarsk Scientific Research Institute of Agriculture.
TITLE : The Fall Sowing of Spring Wheat Under the Conditions of the Forest Steppe of Krasnoyarskiy Kray.

ORIG. PUB. : Byul. nauchno-tekhn. inform. Krasnoyarskogo n.-i. in-ta s.-kh., 1957, No. 1-2, 9-14.

ABSTRACT : Data are cited of the trial of revitalized seeds (obtained from the fall sowing) of different spring wheat varieties with F_1 and F_2. The fall sowings in the forest steppe of Krasnoyarskiy Kray prevent the infection of the plants with wheat smut and secure an increase in the vigor and yielding ability of the spring wheat and also an improvement in the quality of the seeds. Directions are given on the dates of the fall sowings in relation to soil temperature, on the choice of predecessors, the significance of the depth of the snow cover, relief, the sowing rates and varieties, and different schemes for growing elite seeds

CARD: 1/2

COUNTRY :
CATEGORY :

ABS. JOUR. : RZhBiol., No. 1959, No. 10389

AUTHOR :
INST. :
TITLE :

ORIG. PUB. :

ABSTRACT : with the use of fall sowing are recommended. -- N. F. Kravtsova

CARD: 2/2

DERGACHEV, K.V.

M

USSR / Cultivated Plants. Cereals.

Abs Jour : Ref Zhur - Biol., No 8, 1958, No 34632

Author : Dergachev, K.
Inst : None given
Title : Sub-Hibernal Sowing of Summer Wheat in the Forest-Steppeof Krasnodarskiy Kray

Orig Pub : S. kh. Sibiri, 1957, No 9, 34-36.

Abstract : Not given

Card 1/1

33

DERGACHEV, K. V., Cand Agr Sci -- (diss) "Pre-winter sowing of spring wheat under conditions of Krasnodarskiy Kray." Len, 1958. 19 pp (All-Union Order of Lenin Acad Agr Sci im V. I. Lenin, All-Union Inst of Plant Cultivation), 100 copies (KL, 15-58, 117)

GOL'DIN, M.A., kand.tekhn.nauk; PARAFENKO, V.I., inzh.; DERGACHEV, L.G., inzh.

Some problems of the application of telemechanics in mines. (MIRA 15:9)
Ugol' Ukr. 6 no.9:11-13 S '62.

1. Institut gornogo dela AN UkrSSR.
(Mining engineering) (Remote control)

GOL'DIN, M.A.; PARAFENKO, V.I.; DERGACHEV, L.G.

[Remote control of coal mines] Telemekhanizatsiia ugol'nykh shakht. Moskva, Nedra, 1965. 265 p. (MIRA 18:8)

DERGACHEV, N.I.

Chart for calculating the gravitational effect from the geological cross section. Uch. zap. Perm. gos. un. no.122: 59-62 '64. (MIRA 19:1)

DEBORCHEV, N.F.

CA

22

The heat capacity and the heat of evaporation of some solvents from wood. N. F. Deborchev and A. Y. Kiasnov. *J. Applied Chem. (U. S. S. R.)* 11, 1020-5(in French, 1025)(1938).—The av. heat capacity of solvents obtained by the dry distn. of wood were detd. at 23-100° by the method of mixing. The total heat of evapn. (λ^1) was calcd. by the formula $\lambda^1 = ((P + w)\Delta t)/r$ and the av. heat capacity by the formula $C_1 = (((P'C_0 + w)(\Delta t' - \Delta t_1)) - C_0)/p_1$, where (for both formulas) P is the mass of water in the calorimeter, w the water equiv. of calorimeter, r the mass of condensed vapor, C_0, C_1 and C_1 are sp. heats of water, of sample and of empty container resp., p_1 is the mass of sample and Δt, $\Delta t'$ and Δt_1 are increases of temp. due to the condensation of vapor, and to the presence of the container and the difference of temps. between heater and calorimeter, resp. The heat of evapn. (λ) was calcd. by $\lambda = \lambda^1 - (t_{av.} - \lambda t)C_1$ where $t_{av.}$ is an av. b. p. of the solvent. A. A. Podgorny

ASM-SLA METALLURGICAL LITERATURE CLASSIFICATION

DERGACHEV, N.F.

Formula for the determination of concentration of smoke gases in atmospheric air. Gig.i san. no.5:10-15 My '53. (MLRA 6:5)
(Air--Analysis) (Smoke)

DERGACHEV, N. F. Master of Science

"Fly Ash Wet Precipitates," paper presented at the 5th World Power Conference, Vienna, 1956

In Branch #5

DERGACHEV, N.F., kand.tekhn.nauk

Area of application and location of wet ash collectors designed by the All-Union Heat Engineering Institute. Energetik 8 no.6: 16-17 Je '60. (MIRA 13:7)
(Ash disposal)

GORDON, Grigoriy Mikhaylovich; PEYSAKHOV, Isaak L'vovich; DERGACHEV, N.F., kand. tekhn.nauk, retsenzent; RACHKOVA, S.N., retsenzent; ARKHANGEL'SKAYA, M.S., red.; KLEYNMAN, M.R., tekhn. red.

[Control of dust collecting equipment; dust and gas measurements] Kontrol' pyleulavlivaiushchikh ustanovok; pylegazovye zamery. Izd. 2., perer. i dop. Moskva, Gos. nauchno-tekhn.izd-vo lit-ry po chernoi i tsvetnoi metallurgii, 1961. 308 p. (MIRA 14:5)

1. Nachal'nik pylevoy laboratorii Chimkentskogo svintsovogo zavoda (for Rachkova)

(Dust collectors)

DERGACHEV, N.F., kand.tekhn.nauk; YANOVSKIY, L.P., inzh.

Scrubbing of the flue gases of the TP-10 steam boilers. Teploenergetika 8 no.6:20-24 Je '61. (MIRA 14:10)

1. Vsesoyuznyy teplotekhnicheskiy institut.
(Boilers) (Scrubber (Chemical technology))

DERGACHEV, N.F.

Scrubbing of the flue gases of industrial and heating system boiler installations. Energetik 9 no.9:37-38 S '61. (MIRA 14:9)
(Smoke prevention)

DERGACHEV, N.F.

Trapping of the soot from the flue gases of boiler furnaces.
Energetik 10 no.3:33-34 Mr '62. (MIRA 15:2)
(Soot)
(Furnaces)

DERGACHEV, N.I.

Determining the optimum radius of an area taken into account in a correction for the local relief in a gravimetric survey. Geol.i geofiz. no.5:135-137 '62. (MIRA 15:8)

1. Permskiy gosudarstvennyy universitet imeni A.M.Gor'kogo.
(Gravity prospecting)

DERGACHEV, N.I.; MALOVICHKO, A.K.

Effect of cartographic errors on the accuracy of determining corrections for relief in gravity observations. Prikl. geofiz. no.37:154-159 '63. (MIRA 16:10)

DERGACHEV, N.N.

Graph paper for calculating corrections for local relief in conducting gravity surveys. Geol. i geofiz. no.8:107-110 '62. (MIRA 15:10)

1. Permskiy gosudarstvennyy universitet.
(Gravimetry—Equipment and supplies)

L 0506[illegible] EWP(t)/ETI IJP(c) JD/JG/JR/GD

ACC NR: AT6027935 SOURCE CODE: UR/0000/66/000/000/0184/0190

AUTHOR: Broder, D. L.; Dergachev, N. P.; Kondrashov, A. P.; Zhiritskiy, V. K.; Kozlov, V. N.; Lavdanskiy, P. A.

ORG: None

TITLE: Investigation of the shielding properties of concrete which contains boron

SOURCE: Voprosy fiziki zashchity reaktorov (Problems in physics of reactor shielding); sbornik statey, no. 2. Moscow, Atomizdat, 1966, 184-190

TOPIC TAGS: concrete, boron, radiation shielding, fast neutron, gamma radiation, radiative capture

ABSTRACT: The authors study the shielding properties of concrete containing various concentrations of boron and various quantities of hydrogen. A beam of fast neutrons issuing from a horizontal channel in the shielding of the BR-5 reactor was used in these experiments with the arrangement shown in the figure. The diameter of the beam was 40 mm with a neutron density of 10^9 neutr/cm^2·sec. The particle detector was a fission chamber with Th^{232} and indicators made of red phosphorous. The effective threshold of this chamber is close to 1.5 Mev. Indium indicators were used for attenuated streams of thermal and intermediate neutrons. The concrete specimens were made up of 13 plates on a special stand with overall dimensions of 1000×1000×1300 mm. The first plate in this assembly was made with a recess to fit flush against the reactor

Card 1/3

L 05067-67

ACC NR: AT6027935

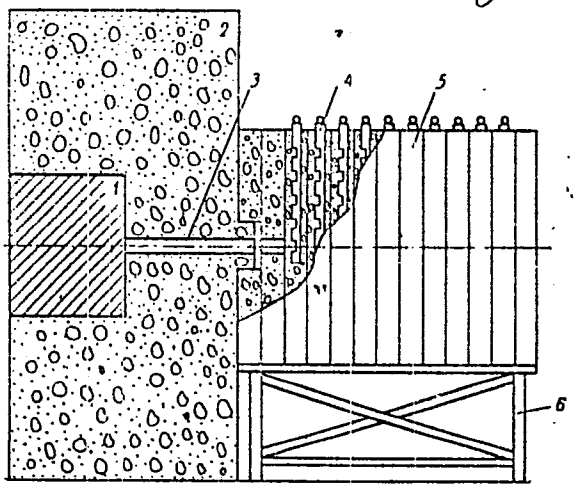

shielding and reduce neutron leakage. The detectors were placed in each plate in special vertical channels measuring 50 mm in diameter with a de th of 600 mm. Seven types of concrete were tested with various concentrations of boron and water. The chemical compositions and boron-water concentrations of the various types are tabulated together with their densities. The neutron flux was measured at various heighths in the experimental channels. The resultant data are used for calculating the relaxation length for fast, thermal and intermediate neutrons in 70-85 cm of concrete. The experimental relaxation lengths for fast neutrons agree satisfactorily with the theoretical data calculated on the basis of the removal cross section method. The shielding properties of concrete with respect to fast neutrons improve as the water concentration in the concrete is increased from 8 to 24 wt.%. An increase in the boron concentration of the concrete results in a considerable reduction in the intensities of thermal and intermediate neutrons and consequently in the production of capture γ-radiation. The

Card 2/3

L 05067-67

ACC NR: AT6027935

boron concentration should not be increased past 3-4 wt.% since this results in a noticeable reduction in the shielding properties of the concrete. Orig. art. has: 6 figures, 3 tables.

SUB CODE: 18, 11/ SUBM DATE: 12Jan66/ ORIG REF: 004/ OTH REF: 002

Card 3/3

DERGACHEV, N.V.; GURINOV, B.F.

Characteristics of discharges from power stations and industrial boilers burning solid fuel. (In: Russia (1923- U.S.S.R.) Vsesoyuznaya gosudarstvennaya sanitarnaya inspektsiya. Ochistka promyshlennykh vybrosov v atmosferu. 1953. p. 54-69) (MLRA 7:1)

1. Tsentral'nyy nauchno-issledovatel'skiy sanitarnyy institut imeni F.F Erismana.

(Air--Purification)

ALIYEV, N.; EYNALOV, A.; NASRULLAYEV, N.; MAMEDOV, A.; MAMEDOV, M.; GADZHIYEV, F., pomoshchnik mastera; EL'DAROV, M., operator; DERGACHEV, P., operator

A word from the petroleum workers of Peschanyy Island. Neftianik 7 no.11:9 N '62. (MIRA 16:6)

1. Zaveduyushchiy morskim promyslom kommunisticheskogo truda No.1 neftepromyslovogo upravleniya Peschanyyneft' (for Aliyev). 2. Sekretar' komiteta Leninskogo Kommunisticheskogo soyuza molodezhi neftepromyslovogo upravleniya Peschanyyneft' (for A. Mamedov). 3. Morskoy promysel kommunisticheskogo truda No.1 neftepromyslovogo upravleniya Peschanyyneft' (for Eynalov, Nasrullayev, M. Mamedov, Gadzhiyev, El'darov, Dergachev).
(Peschanyy Island—Oil well drilling, Submarine)

DERGACHEV, P. V. Cand Tech Sci -- (diss) "Study of the ~~operation~~ performance of [redacted] drains ~~structures~~." Mos, 1959. 11 pp (All-Union Sci Res Inst of Water Supply, Canalization, Hydraulic Structures, and Engineering Hydrogeology VODGEO), 150 copies (KL, 52-59, 120)

DERGACHEV, P.V.

Stability of porous structures. Osn., fund.i mekh.grun. no.5:10-13 '59. (MIRA 12:12)
(Structures, Theory of)

DERGACHEV, P.V.

Calculating the stability of cellular constructions. Osn. fund. i mekh. grun. 5 no.3:17-19 '63. (MIRA 17:1)

GERASCHEV, S.I., [illegible] prepodavatel'.

Prior series. Gruny [illegible] gor. ped. inst. [illegible] '64.
(MIRA 18:9)

APANASENKO, B.G.; DERGACHEV, S.V.; SMIRNOV, S.I.

Comparative evaluation of different methods of treating fractures of the clavicle. Vest. khir. 93 no.9:54-60 S '64. (MIRA 18:4)

1. Iz kliniki voyenno-morskoy i gospital'noy khirurgii (nachal'nik-prof. Ye. V. Smirnov) Voyenno-meditsinskoy ordena Lenina akademii imeni Kirova.

BUROV, Vadim Sergeyevich; TATARKIN, Leonid Tikhonovich; DERGACHEV, Vladimir Andreyevich; AKIMOVA, V.G., red.

[Lapping with diamond pastes. Using diamonds in honing; practice of the "Il'ich" Abrasives Plant] Dovodka almaznymi pastami. Primenenie almazov pri khoningovanii; opyt abrazivnogo zavoda "Il'ich." Leningrad, 1965. 17 p. (MIRA 18:5)

L 63124-65 EWT(m) DIAAP

ACCESSION NR: AP5015009 UR/0240/65/000/006/0070/0072

24
B

AUTHOR: Dergachev, V. L. (Moscow)

TITLE: Experimental inhalation poisoning of animals with radioactive aerosols 19

SOURCE: Gigiyena i sanitariya, no. 6, 1965, 70-72

TOPIC TAGS: animal, radioactive aerosol, aerosol chemistry, chemical laboratory apparatus, radiation injury

ABSTRACT: In experimental studies of radioactive particle inhalation in animals, methods employing aerosols with solid particles are considered particularly effective, but aerosols of this type have been difficult to produce. An apparatus (see encl 01) for producing aerosols with solid particles has been developed based on the interaction of salt solution droplets with oxygen of air in a hot furnace forming oxide as solid particles. Dispersity of the aerosol particles depends largely on initial solution concentration and relatively little on air inflow rate and furnace temperature. Air supplied to the sprayer is under a pressure of 1 atm, furnace

Card 1/3

L 63124-65

ACCESSION NR: AP5015000

temperature fluctuates from 1000 to 1100°, and air expenditure is approximately 12-20 l/min. The system operates under vacuum conditions with suction power considerably higher than air expenditure in the sprayer, and the solid particles are trapped by the filter. Experiments with a zirconium oxychloride solution of 0.5, labeled with a small amount of zirconium-95 show that the solid particles are insoluble and all radioactivity remains on the filter. The apparatus is simple in construction, safeguards the experimenter, and permits variation of solid particle sizes. Orig. art. has: 2 figures and 1 table.

ASSOCIATION: None.

SUBMITTED: 20May64 ENCL: 01 SUB CODE: GS, LS

NR REF SOV: 002 OTHER: 005

Card 2/3

L 63124-65

ACCESSION NR: AP5015000 ENCLOSURE: 01

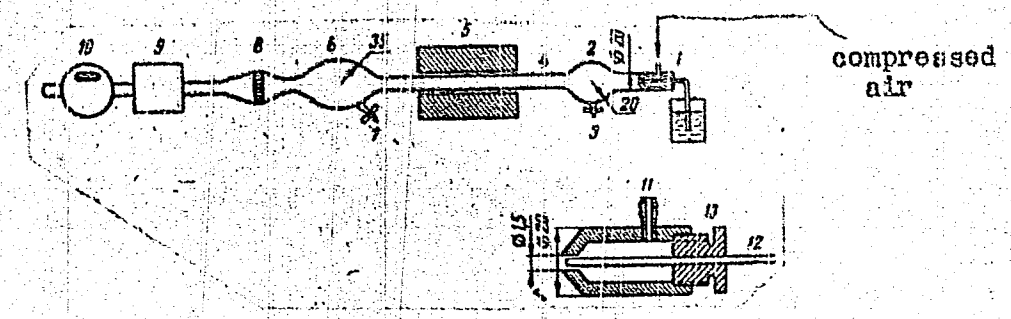

Fig. 1. Diagram of an apparatus for producing aerosols with solid particles. 1 - sprayer dispersing the initial solution, 2 - widening for separation of larger drops, 3 - cock, 4 - quartz tube (25 mm diameter, 1000mm long); middle part (300 mm) located in tubular furnace, 5 - tubular furnace with carborundum heating elements, 6 - widening for separation of larger solid particles, 7 - air inflow adjustment valve, 8 - filter holder with filter, 9 - vacuum, 10 - gas meter, 11 - connecting pipe of sprayer for compressed air supply, 12 - tube with capillary tip for inflow of initial solution, 13 - screw stopper.

Card 3/3

SHVEDOV, V.L.; DERGACHEV, V.I. (Moskva)

Changes in the reactivity in mice during a chronic effect of Sr^{90}.
Med. rad. 10 no.1:30-33 Ja '65. (MIRA 18:7)

DERGACHEV, V.V.; KALEBINA, N.S.; MALOV, G.A.

Effect of folic acid in compensatory hyperfunction of the heart. Dokl. AN SSSR 159 no.1:223-226 N '64. (MIRA 17:12)

1. Institut serdechno-sosudistoy khirurgii AMN SSSR i Institut normal'noy i patologicheskoy fiziologii AMN SSSR. Predstavleno akademikom A.N. Bakulevym.

DERGACHEV, V.V.; LEYKINA, Ye.M.; ANTIPOVA, K.K.

Effect of aminopterin on the nucleic acid concentration in the myocardium following compensatory hyperfunction of the heart. Dokl. AN SSSR 160 no.4:946-948 F '65. (MIRA 18:2)

1. Institut normal'noy i patologicheskoy fiziologii AMN SSSR i Institut eksperimental'noy biologii AMN SSSR. Submitted June 1, 1964.