"APPROVED FOR RELEASE: 03/15/2001 CIA-RDP86-00513R000100910001-9

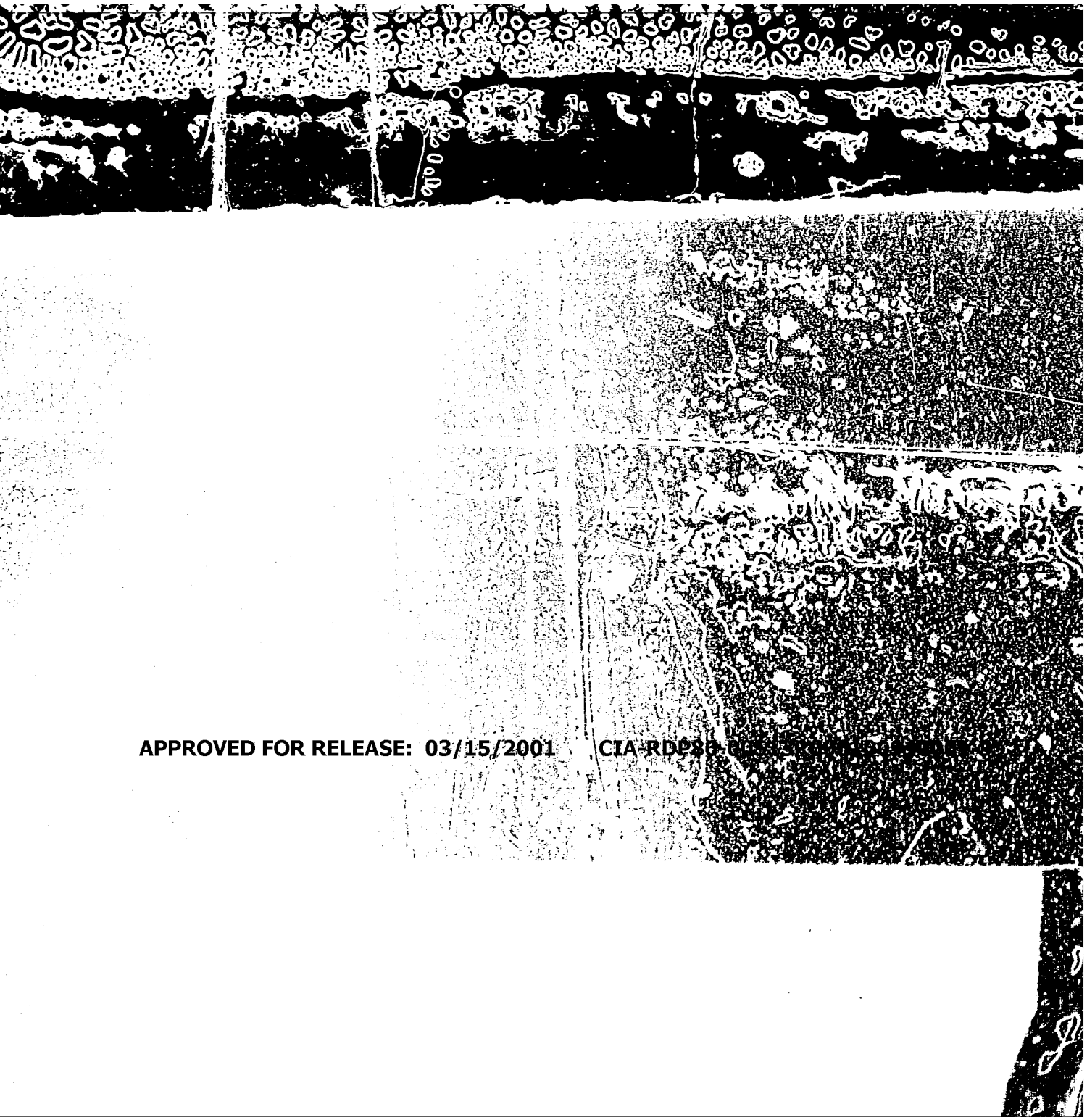

APPROVED FOR RELEASE: 03/15/2001 CIA-RDP86-00513R000100910001-9

"APPROVED FOR RELEASE: 03/15/2001 CIA-RDP86-00513R000100910001-9

L 1570-66 EWT(m)/EWA(h)

ACCESSION NR: AP5019216 UR/0056/65/049/001/0054/0065

AUTHOR: Aleksandrov, Yu. M.; Grushin, V. F.; Zapevalov, V. A.; Leykin, Ye. M.

TITLE: Photoproduction of positive pions from protons at photon energy 230 Mev and determination of the γπp coupling constant

SOURCE: Zhurnal. eksperimental'noy i teoreticheskoy fiziki, v. 49, no. 1, 1965, 54-65

TOPIC TAGS: pion, muon, particle production, angular distribution, meson interaction

ABSTRACT: In view of the contradictory results of earlier measurements, the authors measured the differential cross section and the angular distribution for the photoproduction of π^+-mesons from protons at photon energy 230 Mev for the c.m.s. angles 0, 38, 82, 90, 116, 138, 146, and 180°. The experiment was performed in the bremsstrahlung beam of the 265-Mev synchrotron at FIAN (Physics Institute of the Academy of Sciences). The experimental set-up is illustrated in Fig. 1 of the Enclosure. The apparatus and data-processing procedure are described in detail. The π^+-mesons of given energy were detected by a method involving identification of the particles from their momentum and range in matter, using a magnetic spectrometer and a detector of pion stoppings, comprising a plastic-scintillation-counter telescope con-

Card 1/3

APPROVED FOR RELEASE: 03/15/2001 CIA-RDP86-00513R000100910001-9

L 1570-66

ACCESSION NR: AP5019216

taining a copper absorber of fixed thickness. The charged-particle trajectories were traced by the hot-wire method. Positive pions stopped in one of the counters were reliably identified from the $\pi \to \mu$ decay, which occurred with a characteristic time $\tau_\pi = 2.55 \times 10^{-8}$ sec. Momentum analysis of the particles was performed at 0 and 180°, and at the remaining angles only the stopping detector was used. The mean statistical accuracy was ± (3--4)%. Comparison of the experimental data with a calculation based on dispersion relations (M. I. Adamovich et al., Trudy FIAN v. 34, 1965, in press) and the use of a suitably plotted likelihood function yielded for the γπp constant a value (0.63 ± 0.11)ef (e = electron charge, f = interaction constant). The square of the interaction constant was found to equal 0.07 ± 0.11. A

"APPROVED FOR RELEASE: 03/15/2001 CIA-RDP86-00513R000100910001-9

L 1570-66
ACCESSION NR: AP5019216

ENCLOSURE: 01

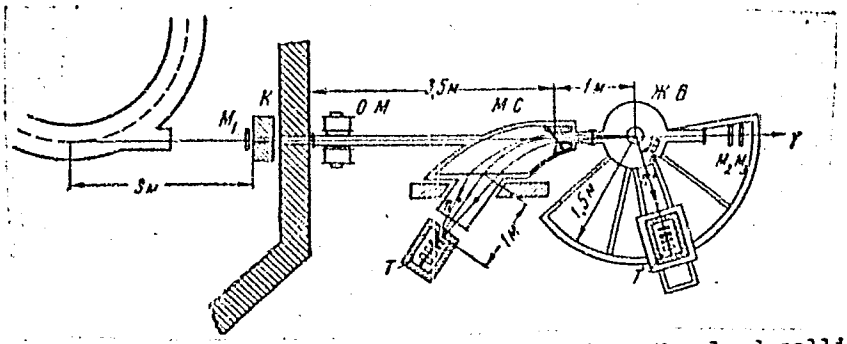

Fig. 1. Schematic diagram of experimental setup. K - lead collimators, OM - clearing magnet, MC - magnetic spectrometer, ЖВ - liquid hydrogen target, M_1, M_2, M_3 - monitor ionization chambers, T - scintillation counter telescope.

Card 3/3

APPROVED FOR RELEASE: 03/15/2001 CIA-RDP86-00513R000100910001-9

ACC NR: AR6035425 SOURCE CODE: UR/0137/66/000/009/1011/1012

AUTHOR: Aleksandrova, Yu. M.; Aleksandrov, L. N.

TITLE: Surface phenomena in the recrystallization of metals

SOURCE: Ref. zh. Metallurgiya, Abs. 9176

REF SOURCE: Sb. Poverkhnostn. yavleniya v rasplavakh i voznikayushchikh iz nikh tverd. fazakh. Nal'chik, 1965, 100-107

TOPIC TAGS: metal surface, metal recrystallization, surface property, activation energy, metal grain, rapture strength, hardness

ABSTRACT: A study of recrystallization processes yields the necessary data for the calculation of the surface energy. In the case of primary recrystallization, the following relations are used:

"APPROVED FOR RELEASE: 03/15/2001 CIA-RDP86-00513R000100910001-9

L 60859-65 EEC-4/EWG(v)/EWT(1)/FBD GW/WS-4

ACCESSION NR: AP5018071 UR/0020/65/163/001/0050/0053

57
55
B

AUTHOR: Kotel'nikov, V. A.; Aleksandrov, Yu. N.; Apraksin, L. V.; Dubrovin, V. M.; Kislik, M. D.; Kuznetsov, B. I.; Petrov, G. M.; Rzhiga, O. N.; Frantsesson, A. V.; Shakovskoy, A. M.

TITLE: Radar observations of Venus in the Soviet Union in 1964

55,12

SOURCE: AN SSSR. Doklady, v. 163, no. 1, 1965, 50-53

TOPIC TAGS: radio wave reflection, Venus radar observation, radio emission measurement, radar observation, radio astronomy

55,12

ABSTRACT: Radar observations of Venus at 40 cm were conducted between 11 and 30 June 1964 by the Institute of Radio Engineering and Electronics of the Academy of Sciences USSR. Frequency modulation and periodic linear frequency modulation of radiated signals were employed. Paramagnetic and parametric amplifiers were used at the receiver output. Signal analysis was performed by means of a 20-channel analyzer with a filter bandwidth of 1.2 cps for each channel. The reflected signal spectrum and measurements of the radial velocity of the motion of Venus were determined on the basis of the Doppler shift of the signal spectrum of the central frequency in relation to the radiation frequency. Frequency manipulation

Card 1/5

APPROVED FOR RELEASE: 03/15/2001 CIA-RDP86-00513R000100910001-9"

L 60859-65

ACCESSION NR: AP5018071

O

was effected with the radiating signal shaped as two alternating telegraphic pulse packets at two carrier frequencies differing either by 62.5 or by 2000 cps. At each frequency, pulse duration and the intervals between transmissions were 4.096 sec. Radio wave reflection from the Venusian surface and measurements of the distance to Venus were effected with linear frequency modulation. The results of the measurements of the distance to Venus and of the radial velocity of its motion are shown in Fig. 1 of Enclosure, with the vertical sections showing rms error values, which till 23 June did not exceed 15 km for 5 min of observation (at a deviation of 4 kc) and after 23 June did not exceed 2 km (at a deviation of 32 kc). Measurement error for velocity did not exceed 2.5 cm/sec. Signal propagation time was calculated with an accuracy of ±5 μsec, and Doppler frequency, with an accuracy of ±0.05 cps. The total rms error value for the initial data was ±400 km.

"APPROVED FOR RELEASE: 03/15/2001 CIA-RDP86-00513R000100910001-9

L 60859-65

ACCESSION NR: AP5018071

ASSOCIATION: Institut radiotekhniki i radioelektroniki Akademii nauk SSSR (Institute of Radio Engineering and Electronics, Academy of Sciences SSSR)

SUBMITTED: 12Apr65 ENCL: 02 SUB CODE: DC, AA

NO REF SOV: 003 OTHER: 000 ATD PRESS: 4063

Card 3/5

APPROVED FOR RELEASE: 03/15/2001 CIA-RDP86-00513R000100910001-9"

L 60859-65

ACCESSION NR: AP5018071

ENCLOSURE: 01

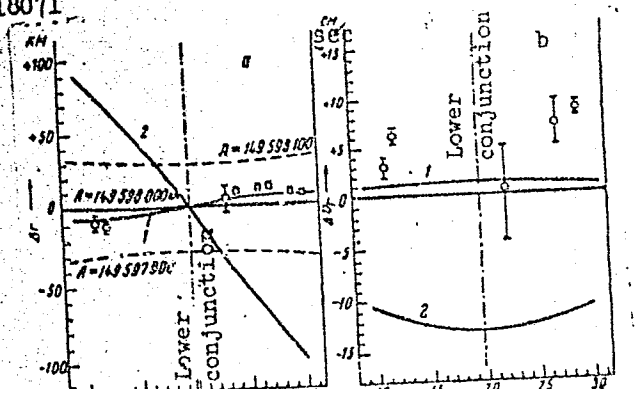

"APPROVED FOR RELEASE: 03/15/2001 CIA-RDP86-00513R000100910001-9

ALEKSANDROV, Yu.P., starshiy prepodavatel'

New members. Zashch. rast. ot vred. i bol. 9 no.9:58 '64. (MIRA 17:11)

1. Novosibirskiy sel'skokhozyaystvennyy institut.

APPROVED FOR RELEASE: 03/15/2001 CIA-RDP86-00513R000100910001-9"

"APPROVED FOR RELEASE: 03/15/2001 CIA-RDP86-00513R000100910001-9

ALEKSANDROV, Yu.P.

There are many changes in the shop. Mashinostroitel' no.3:40 Mr '61.
(MIRA 14:3)

1. Rukovoditel' brigady kommunisticheskogo truda Moskovskogo avtomobil'nogo zavoda imeni I.A. Likhacheva.
(Moscow—Automobile industry)

APPROVED FOR RELEASE: 03/15/2001 CIA-RDP86-00513R000100910001-9"

"APPROVED FOR RELEASE: 03/15/2001 CIA-RDP86-00513R000100910001-9

ALEKSANDROV, Yu.P.

Effect of aerosols on the Swedish fly. Zashch. rast. ot vred. i bol. 6 no.5:63 My '61. (MIRA 15:6)

1. Nachal'nik Altayskoy krayevoy ekspeditsii.
(Altai Territory--Frit flies)
(Aerosols)

APPROVED FOR RELEASE: 03/15/2001 CIA-RDP86-00513R000100910001-9"

"APPROVED FOR RELEASE: 03/15/2001 CIA-RDP86-00513R000100910001-9

ALEKSANDROV, Yu.P.

Seminar of Siberian forecasters. Zashch. rast. ot vred. i bol. 6 no.12:51 D '61. (MIRA 16:5)

1. Nachal'nik Altayskoy ekspeditsii po bor'be s vreditelyami, g. Barnaul.

APPROVED FOR RELEASE: 03/15/2001 CIA-RDP86-00513R000100910001-9"

"APPROVED FOR RELEASE: 03/15/2001 CIA-RDP86-00513R000100910001-9

ALEKSANDROV, Yu.P.

Sugar beet pests in the Altai. Zashch. rast. ot vred. i bol. 7 no.3:26-27 Mr '62. (MIRA 15:11)

1. Nachal'nik Altayskoy krayevoy ekspeditsii.
(Altai Territory--Sugar beets--Diseases and pests)
(DDT (Insecticide))

APPROVED FOR RELEASE: 03/15/2001 CIA-RDP86-00513R000100910001-9"

"APPROVED FOR RELEASE: 03/15/2001 CIA-RDP86-00513R000100910001-9

ALEKSANDROV, Yu.P. (Barnaul)

Forecasting service in the Altai Territory. Zashch.rast.ot vred.i bol. 7 no.5:46-48 My '62. (MIRA 15:11)

1. Nachal'nik Altayskoy ekspeditsii po bor'be s vreditelyami sel'skokhozyaystvennykh rasteniy.
(Altai Territory—Plants, Protection of)

APPROVED FOR RELEASE: 03/15/2001 CIA-RDP86-00513R000100910001-9"

"APPROVED FOR RELEASE: 03/15/2001 CIA-RDP86-00513R000100910001-9

ALEKSANDROV, Yu.P.; ALINOVSKIY, P.G.

Cooperation between science and production. Zashch. rast. ot vred. i bol. 7 no.8:4-6 Ag'62. (MIRA 15:12)

1. Nachal'nik Altayskoy krayevoy ekspeditsii (for Aleksandrov).
2. Zaveduyushchiy otdelom zashchity rasteniy Altayskogo nauchno-issledovatel'skogo instituta sel'skogo khozyaystva (for Alinovskiy).
(Altai Territory—Plants, Protection of)

APPROVED FOR RELEASE: 03/15/2001 CIA-RDP86-00513R000100910001-9"

"APPROVED FOR RELEASE: 03/15/2001 CIA-RDP86-00513R000100910001-9

ALEKSANDROV, Yu.P.; PROKOF'YEV, M.A.

Biological detachment of the Altai Expedition. Zashch. rast. ot vred. i bol. 8 no.2:58 F '63. (MIRA 16:7)

1. Nachal'nik Altayskoy ekspeditsii (for Aleksandrov). 2. Starshiy agronom biologicheskogo otryada pri Altayskoy ekspeditsii (for Prokof'yev).
(Altai Territory--Insects, Injurious and beneficial--Biological control) (Trichogramma)

APPROVED FOR RELEASE: 03/15/2001 CIA-RDP86-00513R000100910001-9"

"APPROVED FOR RELEASE: 03/15/2001 CIA-RDP86-00513R000100910001-9

DROZDOV, V.A., kand.tekhn.nauk; ALEKSANDROV, Yu.P., inzh.

Use of caps of organic glass for natural lighting of industrial buildings. Prom. stroi. 42 no.7:13-17 '65.

(MIRA 18:8)

APPROVED FOR RELEASE: 03/15/2001 CIA-RDP86-00513R000100910001-9"

"APPROVED FOR RELEASE: 03/15/2001 CIA-RDP86-00513R000100910001-9

ACC NR: AP7002088 SOURCE CODE: UR/0103/66/000/012/0047/0057

AUTHOR: Aleksandrov, Yu. S. (Leningrad); Kovshel', M. N. (Leningrad); Sorokin, A. V. (Leningrad)

ORG: none

TITLE: Method for determining statistical characteristics of phase coordinates in linear automatic control systems

SOURCE: Avtomatika i telemekhanika, no. 12, 1966, 47-57

TOPIC TAGS: automatic control system, automatic control R and D, statistic analysis, automatic control design, automatic control technology

ABSTRACT: A method of determining mathematical expectation and crosscorrelation functions of phase coordinates is set forth; the method is applicable only to linear automatic control systems describable by $\dot{x}(t) = A(t)x(t) + B(t)f(t)$, with this initial condition: $x(t)|_{t=0} = x_0$, where x(t) is the n-dimensional vector of phase coordinates (a single-column matrix of phase coordinates); A(t) is the square, n-th order, matrix of coefficients that depends on random design parameters of system k_i; with $i = 1, \ldots, m$; f(t) is the n-variate vector of external forces; B(t) is the diagonal matrix of coefficients that depends on k_i; x_0 is the n-variate vector of initial values

 UDC: 62-501.12

APPROVED FOR RELEASE: 03/15/2001 CIA-RDP86-00513R000100910001-9"

"APPROVED FOR RELEASE: 03/15/2001 CIA-RDP86-00513R000100910001-9

ACC NR: AP7002088

of the phase coordinates. The above system of differential equations is solved for t = T; and the solutions have these forms:

mathematical expectation, $M[x(T)] = \lim_{q \to \infty} M_q[x(T)]$,

crosscorrelation function, $K_{xx}(T, T_1) = \lim_{q \to \infty} K_{xxq}(T, T_1)$.

The number of realizations of random vector x(T) needed for determining the mathematical expectation is: $N = \prod_{i=1}^{n_1} q_i$ where n_1 - number of design parameters, q_i - number of realizations of the i-th design parameter. Thus, the number of x(T) realizations necessary for determining the mathematical expectation, in the above method, is equal to $1/q^{n_1}$ the number of such realizations needed in the interpolation method and in the B. G. Dostupov method. With $n_1 = 10$, the above method becomes close to the Monte-Carlo method as far as the required amount of calculations is concerned. Orig. art. has: 55 formulas

SUB CODE: 09, 13 / SUBM DATE: 25Apr66 / ORIG REF: 008

Card 2/2

APPROVED FOR RELEASE: 03/15/2001 CIA-RDP86-00513R000100910001-9"

"APPROVED FOR RELEASE: 03/15/2001 CIA-RDP86-00513R000100910001-9

S/194/62/000/002/086/096
D271/D301

9.2580

AUTHORS: Aleksandrov, Yu. S. and Utkin, G. M.

TITLE: An oscillator circuit with improved frequency stability

PERIODICAL: Referativnyy zhurnal, Avtomatika i radioelektronika, no. 2, 1962, abstract 2-7-160a (Tr. Mosk. energ. in-ta, 1961, no. 34, 172-180)

TEXT: A variable oscillator with improved frequency stability is studied; a polygonal approximation of the anode current characteristic is assumed and grid self-bias is taken into account. Stability is improved by a compensating effect of two identically built circuits. 5 references. / Abstracter's note: Complete translation. /

Card 1/1

APPROVED FOR RELEASE: 03/15/2001 CIA-RDP86-00513R000100910001-9"

"APPROVED FOR RELEASE: 03/15/2001 CIA-RDP86-00513R000100910001-9

SOMOV, G.P.; SHAPIRO, M.I.; PETROV, A.A.; ALEKSANDROV, Yu.V.

Etiology and epidemiology of tick-borne typhus fever on the islands and coast of the Martitime Territory. Trudy VladIEMG no.2:45-50 '62. (MIRA 18:3)

APPROVED FOR RELEASE: 03/15/2001 CIA-RDP86-00513R000100910001-9"

"APPROVED FOR RELEASE: 03/15/2001 CIA-RDP86-00513R000100910001-9

ACC NR: AR6034634 SOURCE CODE: UR/0372/66/000/007/G013/G013

AUTHOR: Aleksandrov, Yu. V.

TITLE: Analytical construction of regulators for two-channel systems with antisymmetric cross couplings

SOURCE: Ref. zh. Kibernetika, Abs. 7G76

REF SOURCE: Tr. Kazansk. aviats. in-ta, vyp. 87, 1965, 66-75

TOPIC TAGS: cross coupling, antisymmetric cross coupling, regulator, regulator design, two channel system

ABSTRACT: The problem of an analytical design for A. M. Letov regulators is generalized for a case of a two-channel system with cross couplings. The equation for the system has the form $d(p)x = k(p)u$,

$$d(\cdot) = p^n + \sum_{\alpha=0}^{n-1} d_\alpha p^\alpha;\quad k(p) = \sum_{\beta=0}^{m} k_\beta p^\beta,$$

d_α and k_β are complex numbers; $x = x_1 + ix_2$ are the controlled coordinates; $u = u_1 + iu_2$ are the actuation controls. Control u_1 and u_2 are selected from a condition of the functional minimum

Card 1/2 UDC: 62-505

APPROVED FOR RELEASE: 03/15/2001 CIA-RDP86-00513R000100910001-9"

"APPROVED FOR RELEASE: 03/15/2001 CIA-RDP86-00513R000100910001-9

ACC NR: AR6034634

$$I=\int_0^\infty \sum_{\alpha=0}^{n-1} a_\alpha (p^\alpha x)(p^\alpha \bar{x})\,dt+\int_0^\infty \sum_{\beta=0}^{n} a_\beta (p^\beta u)(p^\beta \bar{u})\,dt.$$

Necessary conditions for extreme conditions for the functional I are derived. The procedure for solving the derived equations is discussed. An example is analyzed. There is a bibliography of 4 items. Orig. art. has: 1 figure.

SUB CODE: 09/

Card 2/2

APPROVED FOR RELEASE: 03/15/2001 CIA-RDP86-00513R000100910001-9"

"APPROVED FOR RELEASE: 03/15/2001 CIA-RDP86-00513R000100910001-9

YAGODINSKIY, V.N.; ALEKSANDROV, Yu.V.; KOLODOCHKA, L.A.

Simple device for electrophoresis. Lab. delo. no.2:122-123 '65.
(MIRA 18:2)

APPROVED FOR RELEASE: 03/15/2001 CIA-RDP86-00513R000100910001-9"

"APPROVED FOR RELEASE: 03/15/2001 CIA-RDP86-00513R000100910001-9

ALEKSANDROV, Yu.V. (Sovetskaya Gavan'); KOLODOCHKA, L.A. (Sovetskaya Gavan'); YAGODINSKIY, V.N. (Sovetskaya Gavan')

Description of the male Macrocheles superbus Hull., 1918 (Gamasoidea, Macrochelidae). Zool. zhur. 44 no.4:608-610 '65. (MIRA 18:6)

APPROVED FOR RELEASE: 03/15/2001 CIA-RDP86-00513R000100910001-9"

"APPROVED FOR RELEASE: 03/15/2001 CIA-RDP86-00513R000100910001-9

ALEKSANDROV, Yu.V.; YAGODINSKIY, V.N.; APOLLOVA, L.N.

A new species of mites Parholaspulus bregetovae, sp. n. (Gamasoidea, Macrochelidae). Ent. oboz. 44 no.1:217-220 '65. (MIRA 18:7)

1. Meditsinskaya sluzhba Tikhookeanskogo flota.

APPROVED FOR RELEASE: 03/15/2001 CIA-RDP86-00513R000100910001-9"

"APPROVED FOR RELEASE: 03/15/2001 CIA-RDP86-00513R000100910001-9

ALEKSANDROV, Yu.V.; KOLODOCHKA, L.A.

A new species of mites, Parholaspulus jagodinskyi (Gamasoidea, Macrochelidae). Zool. zhur. 44 no.5:770-773 '65.
(MIRA 18:6)

1. Meditsinskaya sluzhba Tikhookeanskogo flota.

APPROVED FOR RELEASE: 03/15/2001 CIA-RDP86-00513R000100910001-9"

"APPROVED FOR RELEASE: 03/15/2001 CIA-RDP86-00513R000100910001-9

L 17735-66 EWT(1) GS

ACC NR: AT6006214 SOURCE CODE: UR/0000/65/000/000/0104/0110

AUTHOR: Aleksandrov, Yu. V.; Volkov, V. Ya.

43
B+1

ORG: none

21,44,55

TITLE: Grapho-analytic method for approximate determination of transfer functions from their amplitude-phase characteristics

SOURCE: AN SSSR. Institut avtomatiki i telemekhaniki. Tekhnicheskaya Kibernetika (Technical cybernetics). Moscow, Izd-vo Nauka, 1965, 104-110

TOPIC TAGS: automatic control, automatic control system, transfer function determination

ABSTRACT: A grapho-analytic method is presented for approximate determination of the transfer function of a complex dynamic system on the basis of its attenuation-phase characteristics. This method can be applied to linear systems of minimum-phase as well as of nonminimum-phase types. The transfer function of the dynamic system is taken in the form of a rational fraction for which corresponding attenuation and phase characteristics (logarithmic characteristics) A (ω) and ϕ (ω) as functions of unknown time parameters T_i, T_k, T_m, T_s, and parameters ζ_s and ζ_m are written. The problem of determining the transfer function is reduced to determining unknown parameters on the basis of graphs of A (ω) and ϕ (ω). The basic idea of the method consists in the decomposition of the attenuation characteristic A (ω) into characteristics of elementary

Card 1/2

2

APPROVED FOR RELEASE: 03/15/2001 CIA-RDP86-00513R000100910001-9"

"APPROVED FOR RELEASE: 03/15/2001 CIA-RDP86-00513R000100910001-9

L 17735-66
ACC NR: AT6006214

dynamic components and constructing their asymptotes. The time constants T_i, T_k, T_m, and T_s are determined on the basis of asymptotic attenuation characteristic of the components. To determine the unknowns ζ_s and ζ_m, the system of S + M equations is derived. The sets of parameters $\{T\}^1$ and $\{\xi\}^1$ define the first approximation of the transfer function. To obtain more exact values of parameters of the transfer function, the method of successive approximations is applied. An iterative procedure is presented. The method is illustrated by an example in which the transfer function was approximately calculated from given attenuation and phase characteristics of a certain stable dynamic system. It is stressed that this method makes it possible to calculate the transfer function with any desired accuracy and can be applied to systems with delay components. Orig. art. has: 7 formulas. [LK]

SUB CODE: 01/ SUBM DATE: 05Nov65/ ORIG REF: 003/ ATD PRESS: 4201

Card 2/2

APPROVED FOR RELEASE: 03/15/2001 CIA-RDP86-00513R000100910001-9"

"APPROVED FOR RELEASE: 03/15/2001 CIA-RDP86-00513R000100910001-9

L 34366-66 EWT(m)/EWP(t)/ETI IJP(c) JD/JG

ACC NR: AT6008411 SOURCE CODE: UR/3136/65/000/957/0001/0032

AUTHOR: Aleksandrov, Yu. V.; Alekseenko, Yu. N.; Batalov, A. A.; Buynitskaya, V. I.; Kochenov, A. S.; Sarychev, M. A.

ORG: Institute of Atomic Energy im. I. V. Kurchatov (Institut atomnoy energii)

TITLE: The study of the influence of the porosity of beryllium reflector on the flow of thermal neutrons in horizontal beams

SOURCE: Moscow. Institut atomnoy energii. Doklady, IAE-957, 1965. Issledovaniye vliyaniya skvazhnosti berilliyevogo otrazhatelya na potok teplovykh netronov v gorizontal'nykh puchkakh, 1-32

TOPIC TAGS: reactor reflector, neutron beam, neutron flux

ABSTRACT: The intensity of strong neutron fluxes (10^{10}—10^{11} n/cm^2·sec) at the exit of experimental reactor beams is in part determined by the flow of thermal neutrons at the header of the beam and by its cross section. In turn, these depend on the properties of the reflector. Since the authors were unable to imitate on the critical stand the active zone with the required spectral composition of the neutrons, they imitated the "thermal" active zone by establishing the appropriate distribution of the thermal neutron flux within the beryllium reflector. This was achieved by placing a 0.5-mm thick cadmium filter between the active zone and the reflector. The present article describes the critical stand used and the methodology of the

Card 1/2

Card 2/2

APPROVED FOR RELEASE: 03/15/2001 CIA-RDP86-00513R000100910001-9"

"APPROVED FOR RELEASE: 03/15/2001 CIA-RDP86-00513R000100910001-9

L 16878-66 EWT(1)/FCC GW

ACC NR: AR6016282 SOURCE CODE: UR/0269/66/000/001/0027/0028

45
B

AUTHOR: Aleksandrov, Yu. V.

TITLE: Diffuse light reflection by a plane semi-infinite almost dispersive atmosphere

SOURCE: Ref. zh. Astronomiya, Abs. 1.51.237

IN SOURCE: Vestn. Khar'kovsk. un-ta, no. 4, ser. astron., vyp. 1, 1965, 103-107

TOPIC TAGS: atmosphere, light scattering, light reflection, light diffusion, Legendre polynomial, approximation

ABSTRACT: Approximate expressions are obtained for functions in terms of which the intensity of radiation diffusely reflected from a semi-infinite atmosphere is expressed. It is assumed that the scattering indicatrix has the form

$$x(\gamma) = 1 + x_1 P_1(\cos\gamma) + x_2 P_2(\cos\gamma),$$

where γ is the scattering angle; $P_n(\cos\gamma)$ Legendre polynomials. It is also assumed that the survival of a quantum in the presence of scattering is close to unity. Approximations of the type of Eddington and Schwartzschild-Schuster are used. V. I. [Translation of abstract]

SUB CODE: 20, 04, 03

Card 1/1 pla

UDC: 523.035.18

APPROVED FOR RELEASE: 03/15/2001 CIA-RDP86-00513R000100910001-9"

"APPROVED FOR RELEASE: 03/15/2001 CIA-RDP86-00513R000100910001-9

L 06350-67 EWT(1) GW

ACC NR: AR6013404 SOURCE CODE: UR/0269/65/000/011/0060/0060

AUTHOR: Aleksandrov, Yu. V. 36 B

TITLE: Determination of the optical parameters of the planets from observations near opposition 12

SOURCE: Ref. zh. Astronomiya, Abs. 11.51.514

REF SOURCE: Vestn. Khar'kovsk. un-ta, no. 4, 1965, ser. astron., vyp. 1, 99-102

TOPIC TAGS: planetary atmosphere, optic measurement, optic property, Jupiter planet

ABSTRACT: It is noted that for small values of planetary phase angle the use of the least squares method to determine the optical parameters of the planetary atmosphere and surface leads to a very poorly specified system of normal equations. A method for determining the optical parameters of the planets from observations near opposition is proposed which, in the author's opinion, allows this difficulty to be overcome. This method is based on the use of dispersion analysis and permits finding the most probable values of the optical parameters and also the greatest number of parameters which can be determined from the observation data. Some results of data analysis of photographic photometry of Jupiter are presented as an example. L. Lisina [Translation of abstract]

SUB CODE: 03

UDC: 523.40

Card 1/1 mLE

APPROVED FOR RELEASE: 03/15/2001 CIA-RDP86-00513R000100910001-9"

"APPROVED FOR RELEASE: 03/15/2001 CIA-RDP86-00513R000100910001-9

ALEKSANDROV, Yu.Ye., kapitan 3-go ranga

Carrying out a maneuver. Mor. sbor. 47 no.4:58-59 Ap '64.
(MIRA 18:7)

APPROVED FOR RELEASE: 03/15/2001 CIA-RDP86-00513R000100910001-9"

"APPROVED FOR RELEASE: 03/15/2001 CIA-RDP86-00513R000100910001-9

ALEKSANDROV-DOL'NIK, M., kand.yurid.nauk

Legal bases for the organization of transportation operations.
Avt.transp. 40 no.2:15-17 F '62. (MIRA 15:2)
(Transportation, Automotive--Laws and regulations)

APPROVED FOR RELEASE: 03/15/2001 CIA-RDP86-00513R000100910001-9"

"APPROVED FOR RELEASE: 03/15/2001 CIA-RDP86-00513R000100910001-9

ALEKSANDROVA, A.; GLINKA, N.

Determining the sugar content of liquid hematogen by means of a saccharimeter. Mias.ind.SSSR 24 no.3:87 My-Je '53. (MLRA 6:7)

(Hematogen)

1. Leningradskiy myasokombinat.
(CA 47 no.21:11309 '53)

3

APPROVED FOR RELEASE: 03/15/2001 CIA-RDP86-00513R000100910001-9"

"APPROVED FOR RELEASE: 03/15/2001 CIA-RDP86-00513R000100910001-9

MEYEROVICH, L.A.; ZELICHENKO, L.G.; ALEKSANDROVA, A.A., red.; URAZOVA, A.N., tekhn. red.

[Pulse techniques] Impul'snaia tekhnika. Moskva, Izd-vo "Sovetskoe radio," 1953. 829 p. (MIRA 16:7)
(Pulse techniques (Electronics))

APPROVED FOR RELEASE: 03/15/2001 CIA-RDP86-00513R000100910001-9"

"APPROVED FOR RELEASE: 03/15/2001 CIA-RDP86-00513R000100910001-9

SIVERS, Arkadiy Petrovich; SUSLOV, Nikolay Aleksandrovich; ALEKSANDROVA, A.A., redaktor; KORUZEV, N.N., tekhnicheskiy redaktor.

[Fundamentals of radar] Osnovy radiolokatsii. Moskva, Izd-vo "Sovetskoe radio, 1956. 246 p. (MLRA 9:5)
(Radar)

APPROVED FOR RELEASE: 03/15/2001 CIA-RDP86-00513R000100910001-9"

"APPROVED FOR RELEASE: 03/15/2001 CIA-RDP86-00513R000100910001-9

ALEKSANDRO A, A.A.

VAYNSHTEYN, Lev Al'bertovich; ALEKSANDROVA, A.A., redaktor; KORUZEV, N.N., tekhnicheskiy redaktor

[Electromagnetic waves] Elektromagnitnye volny. Moskva, Izd-vo "Sovetskoe radio," 1957. 580 p. (MLRA 10:9)
(Electric waves)

APPROVED FOR RELEASE: 03/15/2001 CIA-RDP86-00513R000100910001-9"

"APPROVED FOR RELEASE: 03/15/2001 CIA-RDP86-00513R000100910001-9

GINZBURG, Vera Moiseyevna; BELOVA, Inessa Nikolayevna; ALEKSANDROVA, A.A., red.; SMUROV, B.V., tekhn. red.

[Calculation of parabolic antennas] Raschet parabolicheskikh antenn. Izd-vo "Sovetskoe radio," 1959. 249 p. (MIRA 13:2)
(Antennae (Electronics))

APPROVED FOR RELEASE: 03/15/2001 CIA-RDP86-00513R000100910001-9"

"APPROVED FOR RELEASE: 03/15/2001 CIA-RDP86-00513R000100910001-9

SHISHONOK, Nikolay Andreyevich; REPKIN, Vasiliy Fedorovich; BARVINSKIY, Leonid L'vovich; Prinimali uchastiye LERNER, V.Yu.; LASTOVCHENKO, M.M.; KREDENTSER, B.P.; USHAKOV, I.A.; BARZILOVICH, Ye.Yu.; SENETSKIY, S.A.; ALEKSANDROVA, A.A., red.; GUTCHINA, N.Ya., red.; LYUBIMOVA, T.M., red.

[Principles of the theory of the reliability and operation of radioelectronic apparatus] Osnovy teorii nadezhnosti i ekspluatatsii radioelektronnoi tekhniki. Moskva, Sovetskoe radio, 1964. 550 p. (MIRA 18:2)

APPROVED FOR RELEASE: 03/15/2001 CIA-RDP86-00513R000100910001-9"

"APPROVED FOR RELEASE: 03/15/2001 CIA-RDP86-00513R000100910001-9

BERGEL'SON, I.G.; DADERKO, N.K.; PAROL', N.V.; PETUKHOV, V.M.;
ALEKSANDROVA, A.A., red.; SMUROV, B.V., tekhn. red.

[Receiving and amplifing tubes with increased reliability]
Priemno-usilitel'nye lampy povyshennoi nadezhnosti; spravochnik.
Moskva, Izd-vo "Sovetskoe radio," 1962. 647 p. (MIRA 15:7)
(Electron tubes--Handbooks, manuals, etc.)

APPROVED FOR RELEASE: 03/15/2001 CIA-RDP86-00513R000100910001-9"

"APPROVED FOR RELEASE: 03/15/2001 CIA-RDP86-00513R000100910001-9

STAL'MAKHOV, V.S.; KOSTENKO, A.I., nauchnyy red.; ALEKSANDROVA, A.A., red.; BELYAYEVA, V.V., tekhn. red.

[Fundamentals of the electronics of superhigh frequency crossed-field devices] Osnovy elektroniki sverkhvysoko-chastotnykh priborov so skreshchennymi poliami. Moskva, Sovetskoe radio, 1963. 365 p. (MIRA 16:6)
(Microwaves) (Microwave tubes)

APPROVED FOR RELEASE: 03/15/2001 CIA-RDP86-00513R000100910001-9"

"APPROVED FOR RELEASE: 03/15/2001 CIA-RDP86-00513R000100910001-9

BAKUT, P.A.; BOL'SHAKOV, I.A.; GERASIMOV, B.M.; KURIKSHA, A.A.; REPIN, V.G.; TARTAKOVSKIY, G.P., prof.; SHIROKOV, V.V.; ALEKSANDROVA, A.A., red.; BELYAYEVA, V.V., tekhn. red.

[Problems of the statistical theory of radar] Voprosy statisticheskoi teorii radiolokatsii. [By] P.A.Bakut i dr. Pod obshchei red. G.P.Tartakovskogo. Moskva, Sovetskoe radio. Vol.1. 1963. 423 p. (MIRA 16:5)
(Radar)

APPROVED FOR RELEASE: 03/15/2001 CIA-RDP86-00513R000100910001-9"

"APPROVED FOR RELEASE: 03/15/2001 CIA-RDP86-00513R000100910001-9

MARKOV, Vladimir Vasil'yevich; ALEKSANDROVA, A.A., red.; OSHEROVICH,L.G., retsenzent; KALABEKOV,B.A.,retsenzent; ALEKSANDROVA,A.A.,red.; BELYAYEVA,V.V.,tekhn.red.

[Radio relay lines with a limited number of channels] Malokanal'nye radiorelейnye linii svia_i. Moskva, "Sovetskoe radio," 1963. 704 p. (MIRA 17:2)

APPROVED FOR RELEASE: 03/15/2001 CIA-RDP86-00513R000100910001-9"

"APPROVED FOR RELEASE: 03/15/2001 CIA-RDP86-00513R000100910001-9

LUKOSHKIN, Anatoliy Petrovich. Prinimal uchastiye GOLUBKOV, A.P., inzh.; ALEKSANDROVA, A.A., red.

[Radar amplifiers with a wide input signal range] Radiolokatsionnye usiliteli s bol'shim diapazonom vkhodnykh signalov. Moskva, Sovetskoe radio, 1964. 254 p.
(MIRA 17:10)

APPROVED FOR RELEASE: 03/15/2001 CIA-RDP86-00513R000100910001-9"

"APPROVED FOR RELEASE: 03/15/2001 CIA-RDP86-00513R000100910001-9

BAKUT, P.A.; BOL'SHAKOV, I.A.; GERASIMOV, B.N.; KURIKSHA, A.A.; REPIN, V.G.; TARTAKOVSKIY, G.P., prof.; SHIROKOV, V.V.; ALEKSANDROVA, A.A., red.

[Problems in statistical radar theory] Voprosy statisticheskoi teorii radiolokatsii [By] P.A.Bakut i dr. Moskva, Sovetskoe radio. Vol.2. 1964. 1078 p. (MIRA 17:9)

APPROVED FOR RELEASE: 03/15/2001 CIA-RDP86-00513R000100910001-9"

"APPROVED FOR RELEASE: 03/15/2001 CIA-RDP86-00513R000100910001-9

VASIL'YEV, Boris Vasil'yevich; KOZLOV, Boris Anatol'yevich; TKACHENKO, Leonid Grigor'yevich; ALEKSANDROVA, A.A., red.

[Reliability and efficiency of radio-electronic devices] Nadezhnost' i effektivnost' radioelektronnykh ustroistv. Moskva, Sovetskoe radio, 1964. 367 p. (MIRA 17:12)

APPROVED FOR RELEASE: 03/15/2001 CIA-RDP86-00513R000100910001-9"

"APPROVED FOR RELEASE: 03/15/2001 CIA-RDP86-00513R000100910001-9

KATSENBOGEN, Mikhail Solomonovich; ZUBKOV, V.D., retsenzent; SMIRNOV, B.A., retsenzent; ALEKSANDROVA, A.A., red.

[Characteristics of radar detection] Kharakteristiki obnaruzheniia. Moskva, Sovetskoe radio, 1965. 95 p. (MIRA 18:4)

APPROVED FOR RELEASE: 03/15/2001 CIA-RDP86-00513R000100910001-9"

"APPROVED FOR RELEASE: 03/15/2001 CIA-RDP86-00513R000100910001-9

BRUYEVICH, A.N.; YEVTYANOV, S.I.; ALEKSANDROVA, A.A., red.

[Approximation of nonlinear characteristics and the spectra under harmonic action] Aproksimatsiia nelineinykh kharakteristik i spektry pri garmonicheskom vozdeistvii. Moskva, Sovetskoe radio, 1965. 343 p.
(MIRA 18:8)

APPROVED FOR RELEASE: 03/15/2001 CIA-RDP86-00513R000100910001-9"

"APPROVED FOR RELEASE: 03/15/2001 CIA-RDP86-00513R000100910001-9

ALEKSANDROVA, A. G., AND POLYANSKAYA, V. A.

The Wind-Power Resources of Voronezhskaya Oblast

The purpose of the work is to clarify the reserves of wind energy in the territory of Voronezhskaya Oblast's. The mean annual velocities of the wind according to a number of stations in Voronezhskaya Oblast are reduced to the altitude 15 meters of a wind gauge, and corrections made for local conditions. largest number of days with strong wind is observed in January and February, the least in the summer months. The largest number of days with calm is observed in summer. The presented table of mean annual powers of an ideal wind engine, according to data of the meterological stations of Voronezhskaya Oblast, is computed by means of the formula $N = 0.000481\ D^2v^3Emax$, in kilowatts, where D is the diameter of the wheel, v is the wind velocity, and Emax is the maximum coefficient of utilization of wind energy of the ideal windmill Emax = 0.593). The wind velocities chosen were the mean annual velocities reduced to height 15 meters above the surface of the earth, and corrected for local conditions surrounding the wind gauge. A table of mean annual powers of a wind engine was computed taking into account the frequency of wind velocities from 3 to 10 meters/second according to the formula: N =

APPROVED FOR RELEASE: 03/15/2001 CIA-RDP86-00513R000100910001-9"

"APPROVED FOR RELEASE: 03/15/2001 CIA-RDP86-00513R000100910001-9

$0.000481\ (D^2E/n).(v_3^3n_3 + \ldots + v_{10}^3n_{10})$, in kilowatts, where the v's are the operating wind velocities from 3 to 10 meters/second, and the n's are the frequencies of the velocities corresponding; n designates the sum of the n's. If in the table of the mean annual powers of a wind engine all the data are multiplied by 0.65 (i.e., coefficient 0.38 is used instead of 0.593), then one obtains the power of an actual wind engine. (RZhGeol, No. 5, 1955) Tr. Voronezhsk. un-ta, 30, 1954, 33-40.

SO: Sum. No. 744, 8 Dec 55 - Supplementary Survey of Soviet Scientific Abstracts (17)

APPROVED FOR RELEASE: 03/15/2001 CIA-RDP86-00513R000100910001-9"

"APPROVED FOR RELEASE: 03/15/2001 CIA-RDP86-00513R000100910001-9

ALEKSANDROVA, A.G.; POLYANSKAYA, V.A.

The cycle of winds in Voronezh and adjoining (Kamensk, Belgorod, and Lipetsk) provinces. Trudy VGU 42 no.4:77-78 '55. (MIRA 11:6)
(Voronezh Province--Winds)

APPROVED FOR RELEASE: 03/15/2001 CIA-RDP86-00513R000100910001-9"

"APPROVED FOR RELEASE: 03/15/2001 CIA-RDP86-00513R000100910001-9

ALEKSANDROVA, A.G.

Vertical atmospheric stratification during glazed frost conditions.
Trudy GGO no.75:78-81 '57. (MIRA 11:3)
(Frost)

APPROVED FOR RELEASE: 03/15/2001 CIA-RDP86-00513R000100910001-9"

"APPROVED FOR RELEASE: 03/15/2001 CIA-RDP86-00513R000100910001-9

VOLGINA, K.P.; SHKURINA, A.M.; ALEKSANDROVA, A.G.

How methods of cultivating olf fallows affect the content of protein and the quality of gluten in wheat. Trudy Biol. inst. Zap.-sib. fil. AN SSSR no.3:245-252 '57. (MIRA 13:10)
(Tillate) (Wheat) (Gluten)

APPROVED FOR RELEASE: 03/15/2001 CIA-RDP86-00513R000100910001-9"

"APPROVED FOR RELEASE: 03/15/2001 CIA-RDP86-00513R000100910001-9

ALEKSANDROVA, A.G.

Photocolorimetric determination of phosphorus in vegetable material by the use of phosphomolybdovanadic heteropolyacid. Izv. Sib. otd. AN SSSR no.6:108-110 '62 (MIRA 17:7)

APPROVED FOR RELEASE: 03/15/2001 CIA-RDP86-00513R000100910001-9"

"APPROVED FOR RELEASE: 03/15/2001 CIA-RDP86-00513R000100910001-9

SOV/137-58-8-16493

Translation from: Referativnyy zhurnal, Metallurgiya, 1958, Nr 8, p 37 (USSR)

AUTHORS: Aleksandrova, A.I., Oyks, G.N., Bannyy, N.P.

TITLE: Manufacture of Steel From High-P Cast Iron (Proizvodstvo stali iz vysokofosforistogo chuguna)

PERIODICAL: Sb. Mosk. in-t stali, 1957, Vol 37, pp 281-304

ABSTRACT: An analysis of 120 experimental smeltings performed in metallurgical furnaces employing air with 25-30% of O_2. By employing O_2 the duration of the smelting process is reduced by 8% in the case of silica-brick furnace crowns (SC) and by 33% in the case of furnaces with basic crowns (BC); this reduction in time is accomplished primarily through a foreshortening of the melting and finishing stages. As the content of O_2 is increased from 25 to 30%, the duration of the smelting process diminishes continuously by 6.5-10.7% (in case of SC) and 14-36% (in the case of BC). Introduction of O_2 into the flame, increasing the amount of ore in the upper layers of friable ingredients, smelting procedures which allow slag to remain on the bottom of the hearth - all these measures speed up the processes of slag formation, dephosphorization, and

Card 1/2

APPROVED FOR RELEASE: 03/15/2001 CIA-RDP86-00513R000100910001-9"

"APPROVED FOR RELEASE: 03/15/2001 CIA-RDP86-00513R000100910001-9

Manufacture of Steel From High-P Cast Iron

saturation of slag with P_2O_5. Compared with smelting operations performed without oxygen in furnaces with SC's, the introduction of O_2 into the flame reduced the fuel consumption in furnaces with BC's by 15-18%. Annual output of furnaces employing O_2 increased by 5% in the case of SC furnaces and by 30.8% in the case of BC furnaces in comparison with BC furnaces employing no oxygen. The production cost of steel smelted in BC furnaces employing O_2 is less by 3 rubles than the cost of regular steel. Employment of phosphate slags will reduce the production costs by 17.6 rubles. Additional capital expenditures connected with the employment of O_2 can be recovered within approximately four years.

Ye.T.

1. Steel--Production 2. Furnaces--Operation 3. Cast iron--Properties
4. Phosphorus--Oxidation 5. Oxygen--Performance

Card 2/2

APPROVED FOR RELEASE: 03/15/2001 CIA-RDP86-00513R000100910001-9"

"APPROVED FOR RELEASE: 03/15/2001 CIA-RDP86-00513R000100910001-9

PROBST, Abram Yefimovich, prof., doktor ekonomicheskikh nauk,; ALEKSANDROVA, Antonina Ivanovna,; BRODSKIY, Viktor Borisovich,; OVSYANNIKOV, Vasiliy Ivanovich,; ROZENTRETER, Avenir Borisovich,;

[Prospects for developing the production of cast iron in electric furnaces in the eastern part of the U.S.S.R. (Eastern Siberia and the Far East). Perspektivy razvitiia vyplavki chuguna v elektricheskikh pechakh na Vostoke SSSR(Vostochnaia Sibir' i Dalnii Vostok). Moskva, Izd-vo Akad. nauk SSSR, 1958. 151 p. (MIRA 11:12)

(Far East--Cast iron)
(Siberia, Eastern--Cast iron)

APPROVED FOR RELEASE: 03/15/2001 CIA-RDP86-00513R000100910001-9"

"APPROVED FOR RELEASE: 03/15/2001 CIA-RDP86-00513R000100910001-9

ALEKSANDROVA, A. I., (Candidate of Technical Sciences)

"Prospects of Development of Electric Blast Furnace Production in the East of the USSR (Eastern Siberia and the Far East)".

for this work author received award by the Academy of Sciences of the USSR, 1957.
Priroda, No. 2, 1958. pp. 113-114.

APPROVED FOR RELEASE: 03/15/2001 CIA-RDP86-00513R000100910001-9"

"APPROVED FOR RELEASE: 03/15/2001 CIA-RDP86-00513R000100910001-9

ALEKSANDROVA, A.I.

PHASE I BOOK EXPLOITATION SOV/4252

Akademiya nauk SSSR. Sovet po izucheniyu proizvoditel'nykh sil

Chernaya metallurgiya (Ferrous Metallurgy) Moscow, Izd-vo AN SSSR, 1960. 275 p. (Series: Razvitiye proizvoditel'nykh sil Vostochnoy Sibiri) Errata slip inserted. 2,000 copies printed.

Ed.: G.I. Lyudogovskiy, Candidate of Technical Sciences; Ed. of Publishing House: G.M. Makovskiy; Tech. Ed.: Ye.V. Makuni; Editorial Board of this vol.: S.S. Dvorin, N.V. Ovchinnikiy, Candidate of Technical Sciences, A.N. Pokhvisnev, Doctor of Technical Sciences, and A.A. Fedotov, Engineer; Editorial Board of Series: I.P. Bardin, (Deceased), Academician, Academy of Sciences USSR (Chief. Ed.); M.A. Lavrent'yev, Academician, Academy of Sciences USSR; S.I. Vol'fkovich, Academician, Academy of Sciences USSR; V.I. Dikushin, Academician, Academy of Sciences USSR; V.S. Nemchinov, Academician, Academy of Sciences USSR; V.I. Veyts, Corresponding Member, Academy of Sciences USSR; O.D. Levitskiy, Corresponding Member, Academy of Sciences USSR; N.N. Nekrasov, Corresponding Member, Academy of Sciences USSR; L.B. Pustovalov, Corresponding Member, Academy of Sciences USSR; T.S. Khachaturov, Corresponding Member, Academy of Sciences USSR; N.F. Rostovtsev, Academician, All-Union Academy of Agricultural Science; A.N. Popov, Member, Academy of Building and Architecture USSR; L. Ye. Grafov, Deputy Chairman, State Planning Committee of the Council of Ministers RSFSR; A.D. Goshev, Member, State Planning Committee of the Council of Ministers RSFSR; A.Ye. Probst, Professor; V.F. Vasyutin, Professor; V.A. Krotov, Professor; P.V. Vasil'yev, Doctor of Economics; G.I. Lyudogovskiy, Candidate of Technical Sciences; P.A. Letunov, Candidate of Geology and Mineralogy; and M.G. Shkol'nikov, Candidate of Economics.

PURPOSE: This collection of papers is intended to furnish information on industrial resources in Eastern Siberia and to provide a basis for future developmental planning in the field of ferrous metallurgy..

COVERAGE: The collection is a summary of the proceedings of the Ferrous Metallurgy Section of the Joint Conference of Representatives of the Academy of Sciences USSR, the State Planning Commission, and the Council of Ministers RSFSR on the Development of the Industrial Resources of Eastern Siberia. The collection deals with four main areas of development in Eastern Siberia: 1) Mineral resources, 2) the fuel base, 3) prospects for the development of ferrous metallurgy, and 4) problems in the development of electrometallurgy. A list of the 112 members of the Section with their affiliations is given in the Appendix. References accompany several of the articles.

Makarov, V.S. Present Reserves and Prospects of Utilization of Ferrous-Metal Scrap in Eastern Siberia 200

Review of Addresses on Reports Dealing With the Development of Ferrous Metallurgy in Eastern Siberia 206

SECTION IV. PROBLEMS IN THE DEVELOPMENT OF ELECTROMETALLURGY IN EASTERN SIBERIA

Probst, A. Ye. Prospects for the Development of Electric Pig Iron Production in Eastern Siberia 215

Aleksandrova, A.I. and A.B. Rozentreter. On the Problem of Conversion of Electric Cast Iron Into Steel 227

Fedotov, A.A. Effectiveness of Hydrogen Production From Flue Gases of Electric Low-Shaft Furnaces 256

Card 7/8

APPROVED FOR RELEASE: 03/15/2001 CIA-RDP86-00513R000100910001-9"

"APPROVED FOR RELEASE: 03/15/2001 CIA-RDP86-00513R000100910001-9

ACCESSION NR: AT4010218 S/3056/63/000/000/0003/0013

AUTHOR: Aleksandrova, A. K.; By*zova, N. L.; Mashkova, G. B.

TITLE: Experiments on the dissemination of precipitating contaminants from a point source in the lower atmosphere

SOURCE: Issledovaniye nizhnego 300-metrovogo sloya atmosfery*. Moscow, 1963, 3-13

TOPIC TAGS: meteorology, air pollution, precipitating contaminant, point source contamination, lower atmosphere, turbulent diffusion

ABSTRACT: In calculating the diffusion of either precipitating or weightless contaminants in the boundary layer of the atmosphere, a phenomenon which depends both on the properties of the contaminant particles and on the turbulence of the air, the maximum concentration of contaminants and the distance of this point from the source are of considerable interest. The authors therefore present the results of 53 experiments. and derive formulas for these parameters on the basis of 2 systems of calculation, assuming either that the coefficient of vertical turbulent diffusion increases linearly with height, or that it is independent of height. For this purpose, 4 types of atmospheric stratification were distinguished (indifferent stratification and 3 degrees of instability), and inversions were not considered. As shown by graphs relating the height of the source to the dis-

Card 1/2

APPROVED FOR RELEASE: 03/15/2001 CIA-RDP86-00513R000100910001-9"

"APPROVED FOR RELEASE: 03/15/2001 CIA-RDP86-00513R000100910001-9

ACCESSION NR: AT4010218

tance between it and the point of maximum contaminant precipitation, as well as the relationships between atmospheric turbulence and the maximum contaminant concentration or length of the contaminated zone, the distance from the source to the area of maximum contaminant density, corrected for the effect of gravity, was proportional to the height of the source within each type of stratification and within the altitude range of 25-300 meters (error of ± 25%). The parameters of horizontal diffusion were determined by the type of stratification, while the position and magnitude of the maximum contaminant density and the length of the contaminated zone were determined by the ratio between the gravitational forces and the turbulence. At relatively high turbulence, the first type of calculation yielded better results for the maximum contaminant density, but the second type of calculation was preferable for determining the length of the contaminated zone; at relatively low turbulence, the method of calculation was immaterial. Orig. art. has: 3 tables, 5 figures and 12 formulas.

ASSOCIATION: none

SUBMITTED: 00 DATE ACQ: 20Feb64 ENCL: 00

SUB CODE: AS NO REF SOV: 009 OTHER: 003

Card 2/2

APPROVED FOR RELEASE: 03/15/2001 CIA-RDP86-00513R000100910001-9"

"APPROVED FOR RELEASE: 03/15/2001 CIA-RDP86-00513R000100910001-9

ACCESSION NR: AT4009671 S/2937/63/000/000/0155/0159

AUTHOR: Aleksandrova, A. K.

TITLE: A method of investigating the dispersion of an artificial aerosol in the surface layer

SOURCE: Izucheniye pogranichnogo sloya atmosfery* s 300-metrovoy meteorologi-cheskoy bashni. Moscow, 1963, 155-159

TOPIC TAGS: meteorological tower, artificial aerosol, polymethyl methacrylate

ABSTRACT: The 300-meter meterological tower has been used for an experiment involving the propagation of admixtures in the surface layer. The admixture used was a luminescent polymethyl methacrylate powder, whose advantages were described in the preceding article in the monograph. A special apparatus, illustrated and described in the text, was used for introducing the aerosol into the atmosphere. The apparatus holds 10 kg of powder and can introduce it into the atmosphere at the rate of 0.2 to 2 kilograms per hour. The particles were trapped at distances of 15 to 20 kilometers from the tower. Conclusions are drawn concerning the influence of the underlying surface on the transport of the admixture. Particles were trapped at 50 to 100 stations at distances of 25 meters to 1 kilometer apart. The processing method is described. Orig. art. has: 5 figures.

Card 1/2

Inst. Applied Geophysics

APPROVED FOR RELEASE: 03/15/2001 CIA-RDP86-00513R000100910001-9"

"APPROVED FOR RELEASE: 03/15/2001 CIA-RDP86-00513R000100910001-9

ALEKSANDROVA, A.M.

New data on the mothodology of peridural antsthesia in gynecological surgery. Akush. i gin. no.2:26-31'63.(MIRA 16:10)

1. Iz ginekologicheskoy kliniki (rukovoditel' - prof. M.S. Aleksandrov) Moskovskogo gorodskogo ordena Trudovogo Krasnogo Znameni nauchno-issledovatel'skogo instituta skoroy pomoshchi imeni N.V.Sklifosovskogo (dir. - zasluzhennyy vrach UkrSSR M.M.Tarasov).

(GYNECOLOGY, OPERATIVE) (SPINAL ANESTHESIA)

APPROVED FOR RELEASE: 03/15/2001 CIA-RDP86-00513R000100910001-9"

"APPROVED FOR RELEASE: 03/15/2001 CIA-RDP86-00513R000100910001-9

ALEKSANDROVA, A. M.

4

CA

Behavior of the glass electrode in nonaqueous solutions. IV. Errors of the glass electrode in the acid and the alkaline region in ethanol and in ethanol-water mixtures. N. A. Izmailov and A. M. Aleksandrova. *Zhur. Obshchei Khim.* (J. Gen. Chem.) 19, 1403-15(1949); cf. C.A. 41, 1144g.—In MeOH, EtOH, and in mixts. EtOH + H_2O, the calibration curve of the Hughes and the MacInnes and Dole glass electrodes in the alk. region passes through a max. With increasing amt. of EtOH, the max. moves to more strongly alk. values. In the acid region (HCl), the sign of the deviation from linearity between the potential and the pH is opposed to that in the alk. region. The calibration curve passes through a min. which shifts to less acid values with increasing amt. of EtOH. The ion-exchange coeff. K increases from H_2O to the abs. alks. Thus, from $K = 6.31 \times 10^{-10}$ in H_2O, it increases, for the glasses of Hughes and of MacInnes and Dole, to 8.0×10^{-7} and 2.0×10^{-7}, resp., in abs. EtOH, and to 2.82×10^{-10} and 2.82×10^{-11}, resp., in abs. MeOH. While the glass electrode remains perfectly usable in mixts. of EtOH and MeOH with H_2O, the range of its applicability becomes narrower with increasing alc. content. N. Thon

APPROVED FOR RELEASE: 03/15/2001 CIA-RDP86-00513R000100910001-9"

"APPROVED FOR RELEASE: 03/15/2001 CIA-RDP86-00513R000100910001-9

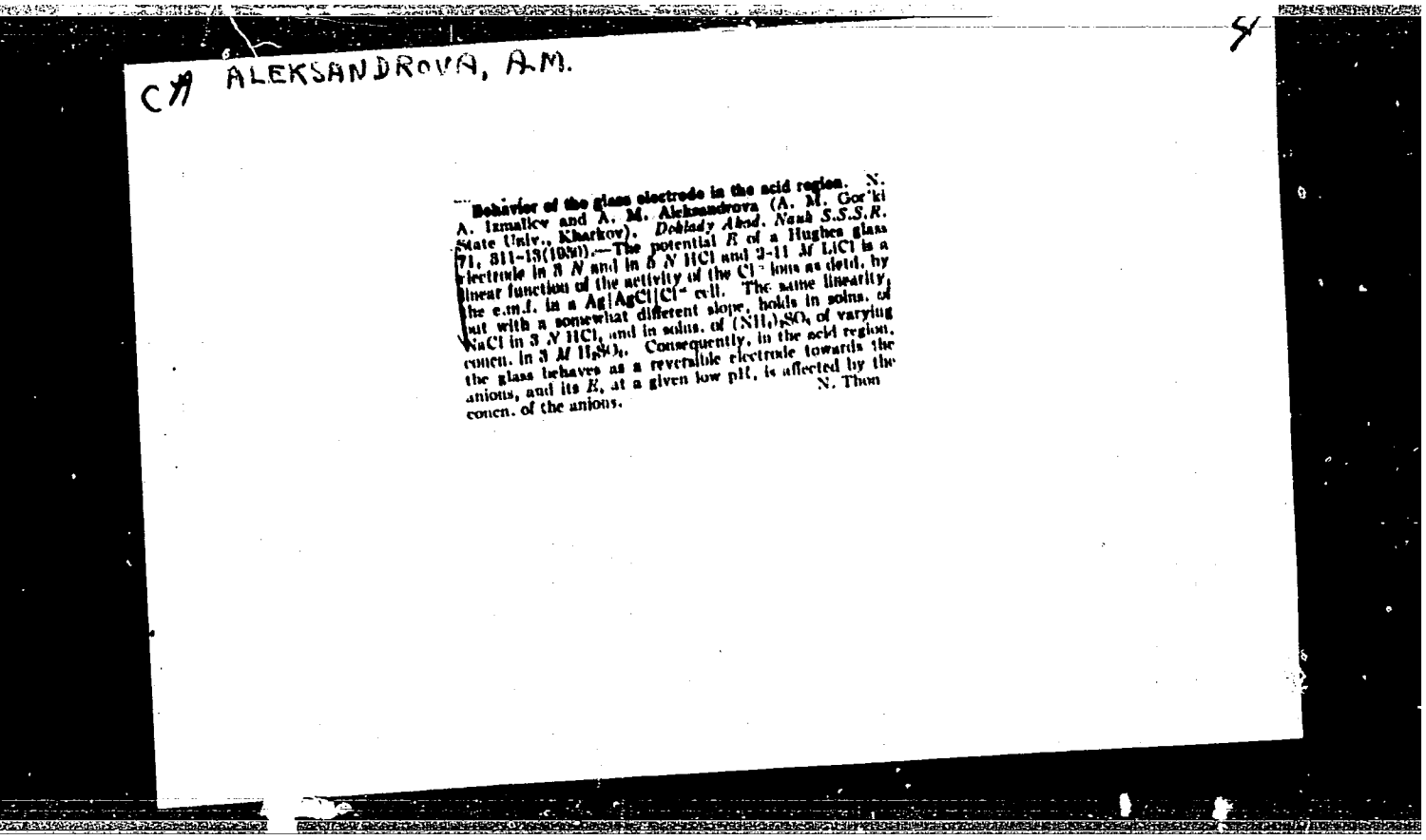

CA ALEKSANDROVA, A.M.

Behavior of the glass electrode in the acid region. N. A. Izmailov and A. M. Aleksandrova (A. M. Gor'ki State Univ., Kharkov). *Doklady Akad. Nauk S.S.S.R.* 71, 311-13(1950).—The potential E of a Hughes glass electrode in 3 N and in 5 N HCl and 2-11 M LiCl is a linear function of the activity of the Cl^- ions as detd. by the e.m.f. in a Ag|AgCl|Cl^- cell. The same linearity, but with a somewhat different slope, holds in solns. of NaCl in 3 N HCl, and in solns. of $(NH_4)_2SO_4$ of varying concn. in 3 M H_2SO_4. Consequently, in the acid region, the glass behaves as a reversible electrode towards the anions, and its E, at a given low pH, is affected by the concn. of the anions. N. Thon

APPROVED FOR RELEASE: 03/15/2001 CIA-RDP86-00513R000100910001-9"

"APPROVED FOR RELEASE: 03/15/2001 CIA-RDP86-00513R000100910001-9

CA ALEKSANDROVA, A.M.

4

Behavior of the glass electrode in nonaqueous media. V. Behavior of the glass electrode in glacial acetic acid. N. A. Izmailov and A. M. Aleksandrova (Kharkov State Univ.). *Zhur. Obshchei Khim.* (J. Gen. Chem., U.S.S.R.) 20, 2127-32(1950); cf. *C.A.* 45, 1430*d*.—Glass electrodes of Hughes (I) and of Maclanes-Dole (II) glass were calibrated at pH from 8.3 to − 1.4, detd. with the quinhydrone electrode (against H_2SO_4 0.1437 *M* in glacial AcOH) in the following solns. in glacial AcOH: $PhNMe_3$ 1 *M* (pH 8.3); AcONa 1.0 *N* (8.1); AcONa 0.25 *N* (7.6); AcONa 0.1 *N* (7.25); AcONa 0.01 *N* (6.7); AcONa 0.1 *N* + $HClO_4$ 0.1 *N* (3.3); $HClO_4$ 0.05 *N* (2.4); $HClO_4$ 0.1 *N* (2.1); $HClO_4$ 0.2 *N* (1.4); H_2SO_4 0.004 *M* + Ac_2O 10% (0.3); H_2SO_4 0.007 *M* + Ac_2O 10% (−0.2); $HClO_4$ 0.02 *N* + Ac_2O 10% (−1.4). In aq. soln., electrode I showed a break at pH −0.2, and II a deviation from linearity in the same region, but in glacial AcOH both electrodes showed a break at pH = 1.3. The potentials *E* of both electrodes varied linearly with the pH from 1.5 to 8.5, with the slopes $\Delta E/\Delta pH$ = 58.6 for (I) and 58.5 for (II), resp. Consequently, both electrodes were applicable for pH measurements in that range. Acid hysteresis was absent. Titration of $MeC_6H_4SO_3H$ with $PhNMe_3AcOH$ in glacial AcOH with electrode I gave rapid establishment of the potentials (2 min.) and a sharp peak of ΔE against the vol. of reagent added. N. Thon

APPROVED FOR RELEASE: 03/15/2001 CIA-RDP86-00513R000100910001-9"

"APPROVED FOR RELEASE: 03/15/2001 CIA-RDP86-00513R000100910001-9

CA ALEKSANDROVA, A.M.

4

The behavior of the glass electrode in nonaqueous solutions. V. In glacial acetic acid. N. A. Izmailov and A. M. Aleksandrova (Kharkov State Univ.). *J. Gen Chem. U.S.S.R.* 20, 2207-12(1950)(Engl. translation).—See C.A. 45, 4581d.

B. L. M.

APPROVED FOR RELEASE: 03/15/2001 CIA-RDP86-00513R000100910001-9"

"APPROVED FOR RELEASE: 03/15/2001 CIA-RDP86-00513R000100910001-9

ALEKSANDROVA, A.M.

Chemical Abst.
Vol. 48 No. 4
Feb. 25, 1954
Electrochemistry

Use of glass electrode in nonaqueous media. N. A. Izmailov and A. M. Aleksandrova. *Trudy Komissii Anal. Khim. Akad. Nauk S.S.S.R., Otdel. Khim. Nauk* 4(7): 149-62(1952); cf. *C.A.* 46, 4933*d*.—Over a wide pH interval, 2 electrodes were calibrated for mixts. of H_2O and O, 20, 71.9, 88.5, 93.5, and 100% EtOH by wt. Also 1 electrode was calibrated for H_2O, abs. EtOH, and abs. MeOH. The app. is described. The electrodes were sphere shaped, like those of Gaber, but one was made of the glass used by Hughes and the other of the glass used by MacInnes and Dole. The pH of the alc. solns. used was measured by H electrode and compared against a standard, 0.1*N* HCl in the corresponding soln. Thus, activity was expressed on the scale $pH_{solvent}$. Potentials of the electrode of Hughes glass were plotted against pH. All the curves were similar. In the middle pH range changes were proportional, but a min. occurred somewhere below pH 4 and a max. somewhere above pH 10. In the alk. range a cause of deviation was the differences of the exchange of H ion and Na ion between glass and soln. for different glass compns. For each electrode $pH_{max.}$ and K (const. of exchange of ions in glass) were detd. As alc. content increased, K increased because the activity was changed. As alc. content increased, the straight-line portion of the curve was shortened and this was the only limitation on the use of the glass electrode in nonaq. solns. In the middle pH range, pH did not depend on media. When the electrode of Hughes glass was used with H_2O, abs. EtOH, and abs. MeOH, the differences in curves were explained by differences of phase and diffusion potentials. When the electrode of M. and D. glass was used with H_2O and 88.5% EtOH, the curves were identical until pH 10, after which point alc. had a max. at a lower point than water had. 25 references. Eurilla Meyerle

4/15/54

APPROVED FOR RELEASE: 03/15/2001 CIA-RDP86-00513R000100910001-9"

"APPROVED FOR RELEASE: 03/15/2001 CIA-RDP86-00513R000100910001-9

Aleksandrova, G. M.

Behavior of the glass electrode in acids. N. A. Izmailov and A. M. Aleksandrova (A. M. Gor'kii State Univ., Khar'kov). *Sbornik Statei Obshchei Khim., Akad. Nauk S.S.S.R.* 1, 173-8(1953); cf. *C.A.* 45, 4581d.—To det. the effect of anions on the calibration curve of the glass electrode in acids, measurements were made with a Hughes glass electrode in aq. solns. of HCl, H_2SO_4, and H_3PO_4. In all acids E vs. pH curves passed through a min., the position of which depended on the anion as well as on the concn. of the acid and the compn. of the glass of the electrode. In HCl at low pH beyond the min. the glass electrode acted reversibly towards the anion. In H_2SO_4 [illegible] pH (10-15N), in H_3PO_4 at 0.4 pH (25-30N) and in HCl at 0.2 pH (1-2N). E vs. log a (a = mean activity) in H_2SO_4, H_3PO_4, and HCl gave min. at log a 0.65-2 [illegible] and 0.1. E vs. log a_{H^+} in HCl was a straight line [illegible] was a straight line almost vertical to the log a_{H^+} axis down to the lowest E where it [illegible] there was a wide min. at a high concn. [illegible] was concluded that the error of the glass electrode in acids could not be due to the change in the H_3O^+ activity in the solns., but rather to the likelihood that the electrode in acids added an anion function to the known H^+ function. In acids the electrode beyond the min. acted reversibly towards the anion. I. Bencowitz

APPROVED FOR RELEASE: 03/15/2001 CIA-RDP86-00513R000100910001-9"

"APPROVED FOR RELEASE: 03/15/2001 CIA-RDP86-00513R000100910001-9

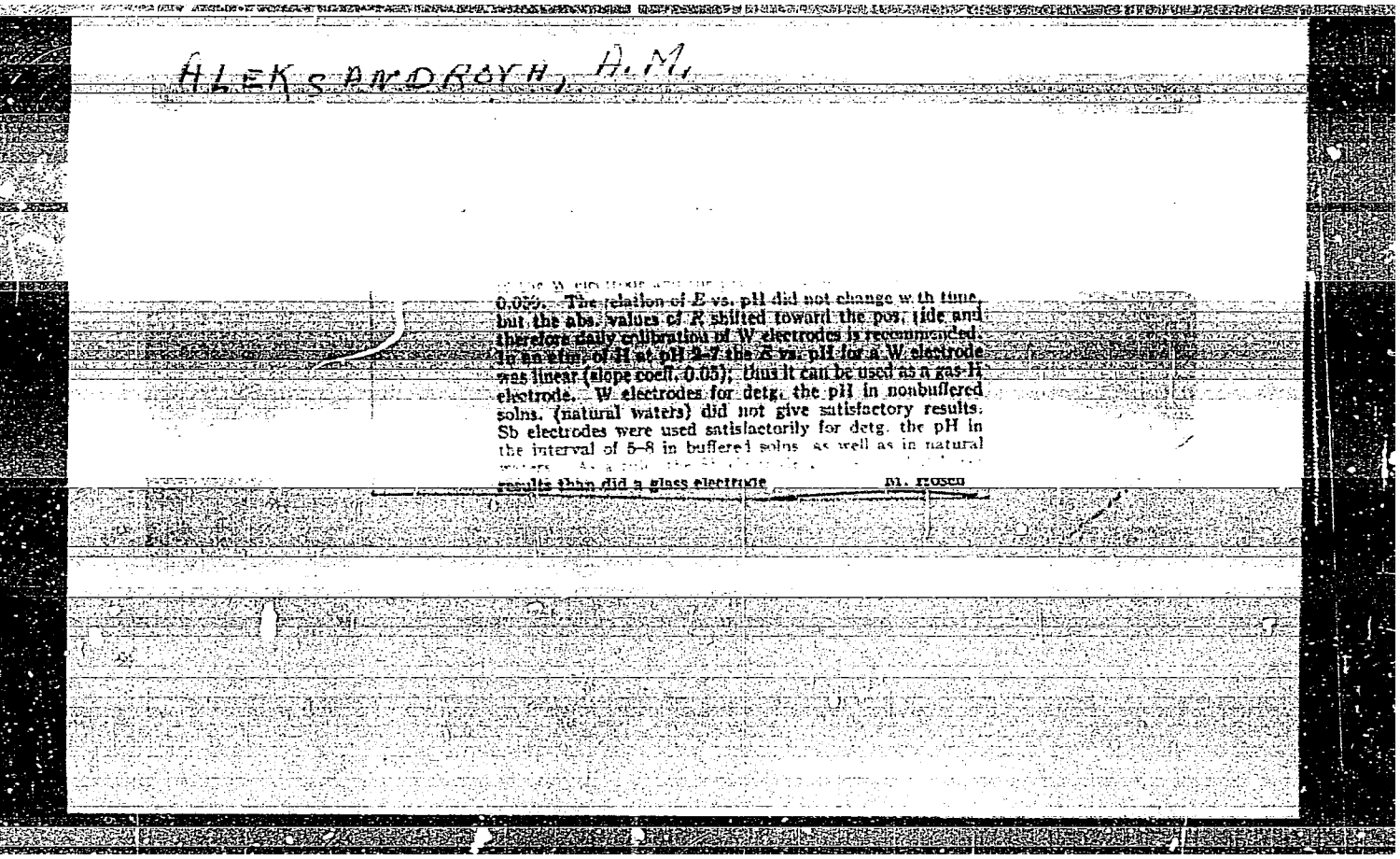

ALEKSANDROV, A.M.

0.059. The relation of E vs. pH did not change with time, but the abs. values of E shifted toward the pos. side and therefore daily calibration of W electrodes is recommended. In an atm. of H at pH 2–7 the E vs. pH for a W electrode was linear (slope coeff. 0.05); thus it can be used as a gas-H electrode. W electrodes for detg. the pH in nonbuffered solns. (natural waters) did not give satisfactory results. Sb electrodes were used satisfactorily for detg. the pH in the interval of 5–8 in buffered solns. as well as in natural [illegible] results than did a glass electrode. M. Rosen

APPROVED FOR RELEASE: 03/15/2001 CIA-RDP86-00513R000100910001-9"

"APPROVED FOR RELEASE: 03/15/2001 CIA-RDP86-00513R000100910001-9

ALEKSANDROVA, A.I.

Protective casing-support for glass electrodes. Uch.zap. KHGU 71:249-251 '56. (MLRA 10:8)
(Electrodes, Glass)

APPROVED FOR RELEASE: 03/15/2001 CIA-RDP86-00513R000100910001-9"

"APPROVED FOR RELEASE: 03/15/2001 CIA-RDP86-00513R000100910001-9

ALEKSANDROVA, A. M. Cand Chem Sci -- (diss) "Study of the properties of glass electrodes in acid fields and in non-aqueous solutions." Khar'kov, 1957. 14 pp (Min of Higher Education UkSSR. Sci Res Inst of Chemistry Khar'kov Order of Labor Red Banner State Univ im A. M. Gor'kiy), 100 copies (KL, 3-58, 95)

APPROVED FOR RELEASE: 03/15/2001 CIA-RDP86-00513R000100910001-9"

"APPROVED FOR RELEASE: 03/15/2001 CIA-RDP86-00513R000100910001-9

KRUPSKIY, N.K.; ALEKSANDROVA, A.M.; GORBAN', Yu.V.

Curves of the potentiometric titration of soil suspensions in anhydrous solvents. Pochvovedenie no. 5:106-110 My '61. (MIRA 14:5)

1. Ukrainskiy nauchno-issledovatel'skiy institut pochvovedeniya.
(Soils—Analysis) (Soil acidity)

APPROVED FOR RELEASE: 03/15/2001 CIA-RDP86-00513R000100910001-9"

"APPROVED FOR RELEASE: 03/15/2001 CIA-RDP86-00513R000100910001-9

KRUPSKIY, N.K.; ALEKSANDROVA, A.M.; KHIZHNYAK, A.I.

Determination of available aluminum in soils. Pochvovedenie no.10:93-96 O '61. (MIRA 14:9)

1. Ukrainskiy nauchno-issledovatel'skiy institut pochvovedeniya imeni A.N. Sokolovskogo.
(Soils--Aluminum content)

APPROVED FOR RELEASE: 03/15/2001 CIA-RDP86-00513R000100910001-9"

"APPROVED FOR RELEASE: 03/15/2001 CIA-RDP86-00513R000100910001-9

S/081/62/000/017/033/102
B162/B 101

AUTHORS: Krupskiy, N. K., Aleksandrova, A. M., Stetsenko, M. V.

TITLE: Detection of chloride ion in muddy and colored ground extracts

PERIODICAL: Referativnyy zhurnal. Khimiya, no. 17, 1962, 132, abstract 17D86 (Pochvovedeniye, no. 2, 1962, 109 - 113 [summary in Eng])

TEXT: In order to determine Cl^- in muddy and colored aqueous ground extracts, the methods applied are potentiometric titration of a solution of the sample (0.5 ml 2N H_2SO_4 per 10 ml of sample solution) acidified with 0.002N $AgNO_3$ solution using an indicating silver chloride electrode (Pt-wire, covered with a mixed paste of Ag_2O and AgCl (7:1) and calcined at 450°C); and visual mercurimetric titration with diphenyl carbazone as indicator in the presence of benzene. To 10 ml of the sample solution, 10 ml of water and then a few drops of 1% solution of diphenyl carbazone are added, neutralized with a 0.2N HNO_3 solution (till yellow color), 5 ml of benzene is added and the mixture titrated with a 0.01N $Hg(NO_3)_2$

Card 1/2

APPROVED FOR RELEASE: 03/15/2001 CIA-RDP86-00513R000100910001-9"

"APPROVED FOR RELEASE: 03/15/2001 CIA-RDP86-00513R000100910001-9

KRUPSKIY, N.K.; ALEKSANDROVA, A.M.; GUBAREVA, D.N.

Determining the pH value in soils of the Ukrainian S.S.R.
Pochvovedenie no.4:70-78 Ap '62. (MIRA 15:4)

1. Ukrainskiy nauchno-issledovatel'skiy institut pochvovedeniya imeni A.N.Sokolovskogo.
(Ukraine--Soil acidity)

APPROVED FOR RELEASE: 03/15/2001 CIA-RDP86-00513R000100910001-9"

"APPROVED FOR RELEASE: 03/15/2001 CIA-RDP86-00513R000100910001-9

ALEKSANDROVA A.N.

ГЕРМАНИЯ И НЕКОТОРЫЕ РЕДКИЕ
И РАССЕЯННЫЕ ЭЛЕМЕНТЫ В УГЛЕ

М. А. Мамонтовский, А. Н. Александрова, К. Ю. Волков,
С. А. Гордон, Л. Н. Петровская
(Московский [illegible])

VIII Mendeleyev Congress for General and Applied Chemistry in
Section of Chemistry and Chemical Technology of Fuels,
publ. by Acad. Sci. USSR, Moscow 1959

abstracts of reports scheduled to be presented at above mentioned congress,
Moscow, 13 March 1959.

APPROVED FOR RELEASE: 03/15/2001 CIA-RDP86-00513R000100910001-9"

"APPROVED FOR RELEASE: 03/15/2001 CIA-RDP86-00513R000100910001-9

ALEKSANDROVA, A.N., assistent

Rapid method of quantitative chemical determination of germanium in coal ash. Nauch. trudy MGI no.27:65-69 '59.
(Coal--Analysis)
(Germanium--Ananlysis)

APPROVED FOR RELEASE: 03/15/2001 CIA-RDP86-00513R000100910001-9"

"APPROVED FOR RELEASE: 03/15/2001 CIA-RDP86-00513R000100910001-9

GORDON, S.A., starshiy nauchnyy sotrudnik; ALEKSANDROVA, A.N., assistent

Germanium determination in coals and their products. Nauch. trudy MGI no.27:71-74 '59. (MIRA 14:6)
(Coal--Analysis) (Germanium--Analysis)

APPROVED FOR RELEASE: 03/15/2001 CIA-RDP86-00513R000100910001-9"

"APPROVED FOR RELEASE: 03/15/2001 CIA-RDP86-00513R000100910001-9

ALEKSANDROVA, A.N., assistent

Effect of the rate of heating on the formation of 2nd type coal oxygen compounds during the low temperature oxidation of coals and products of their preparation. Nauch. trudy MGI no.27:115-122 '59. (MIRA 14:6)
(Coal preparation) (Oxydation)

APPROVED FOR RELEASE: 03/15/2001 CIA-RDP86-00513R000100910001-9"

"APPROVED FOR RELEASE: 03/15/2001 CIA-RDP86-00513R000100910001-9

ALEKSANDROVA, A.N., assistent

Study of some gaseous products of the thermal decomposition of coals using a triethanolamine aqueous solution. Nauch. trudy MGI no.27:123-128 '59. (MIRA 14:6)
(Coal--Analysis) (Ethanol)

APPROVED FOR RELEASE: 03/15/2001 CIA-RDP86-00513R000100910001-9"

"APPROVED FOR RELEASE: 03/15/2001 CIA-RDP86-00513R000100910001-9

5(2)

AUTHORS: Menkovskiy, M. A., Aleksandrova, A. N. SOV/32-25-2-17/78

TITLE: An Accelerated Method for the Determination of Germanium in the Ashes of Coal Minerals (Uskorennyy metod opredeleniya germaniya v zole iskopayemykh ugley)

PERIODICAL: Zavodskaya Laboratoriya, 1959, Vol 25, Nr 2, p 161 (USSR)

ABSTRACT: In the method described the coal sample is fused by heating in phosphoric acid and treated with hydrochloric acid; then the germanium chloride which has formed is distilled off and the germanium is determined colorimetrically with phenol fluorone. In comparison with the analogous analysis of ores by Strickland (Ref 1) twice as much phosphoric acid and no nitric acid is used in the present case. Coal samples (brown coal, types D, G, PZh, K, and PS) were determined by the method described and at the same time by a method in which the decomposition was performed in a mixture of hydrofluoric acid and sulfuric acid. A comparison (Table) of the results showed a remarkable agreement. In the presence of larger quantities of chlorides (more than 10%) losses of germanium may occur in the fusion process, as was shown by I. P. Alimarin and B. N. Ivanov-Emin (Ref 2) in the case of the hydrofluoric acid - sulfuric acid mixture. Duration of analysis by the method described:

APPROVED FOR RELEASE: 03/15/2001 CIA-RDP86-00513R000100910001-9"

"APPROVED FOR RELEASE: 03/15/2001 CIA-RDP86-00513R000100910001-9

An Accelerated Method for the Determination of Germanium in the Ashes of Coal Minerals

SOV/32-25-2-17/78

1.5 hours. There are 1 table and 3 references, 2 of which are Soviet.

ASSOCIATION: Moskovskiy gornyy institut im. I. V. Stalina (Moscow Mining Institute imeni I. V. Stalin)

Card 2/2

APPROVED FOR RELEASE: 03/15/2001 CIA-RDP86-00513R000100910001-9"

"APPROVED FOR RELEASE: 03/15/2001 CIA-RDP86-00513R000100910001-9

MENKOVSKIY, M.A.; ALEKSANDROVA, A.N.

Using the acid demineralization method under reducing conditions for determining the characteristics of germanium compounds in coals. Dokl. AN SSSR 146 no.4:868-870 O '62. (MIRA 15:11)

1. Moskovskiy gornyy institut. Predstavleno akademikom S.I. Vol'fkovichem.

(Germanium compounds)
(Coal) (Pyrites)

APPROVED FOR RELEASE: 03/15/2001 CIA-RDP86-00513R000100910001-9"

"APPROVED FOR RELEASE: 03/15/2001 CIA-RDP86-00513R000100910001-9

L 15668-63 EWP(q)/EWT(m)/BDS AFFTC JD

ACCESSION NR: AP3004230 S/0032/63/029/007/0797/0799

AUTHORS: Monkovskiy, M. A.; Aleksandrova, A. N. 53 52

TITLE: Selection of coal ashing conditions for germanium determination

SOURCE: Zavodskaya laboratoriya, v. 29, no. 7, 1963, 797-799

TOPIC TAGS: germanium, germanium determination, ashing, coal ashing, ashing temperature, heating rate, ash content, Ge

ABSTRACT: The behavior of germanium during the process of ashing of various coal samples was investigated in relation to the rate of temperature increase, the amount of mineral admixtures, the total sulfur content of the coal, and the ashing temperature. Five-gram samples of coal were placed in a furnace, the temperature raised at rates of 3.5 and 20C per minute until a final temperature of 550C was reached, at which the ashing was continued until completed. The ash was analyzed for germanium, and it was found that in a brown coal sample with 13.41% ash the loss of germanium at a 3.5C-increase rate amounted to 2.1% of its original content, while at an increase rate of 20C per minute the germanium loss amounted to 10.0%. On the other hand, a furnace-type bituminous coal with a 4.46% ash content lost (under identical ashing conditions) 2.7% and 6.7% respectively of the original germanium content. In

Card 1/2

APPROVED FOR RELEASE: 03/15/2001 CIA-RDP86-00513R000100910001-9"

"APPROVED FOR RELEASE: 03/15/2001 CIA-RDP86-00513R000100910001-9

L 15668-63

ACCESSION NR: AP3004230

order to check the effect of ash on the loss of germanium during the ashing process, each sample was separated into two fractions by difference in specific gravity, the one floating on top of a nonspecified fluid, the other settling. The ash content of the floating fractions of the same brown and bituminous coal samples amounted to 2.54% and 1.35% respectively, as against 26.17% and 38.81% in the settling fraction. After ashing at the 3.5C-rate, the losses of germanium amounted to 0.4% and 8.4% in the floating fractions, as against 2.5% and 0.0 in the settling fractions, thus placing emphasis on the kind of coal being ashed. The recommended procedure for the ashing of coal samples for germanium determination consists in a staggered increase of temperature at a rate of 3.5C per minute, with a maximum of 700C-800C, and duration of 3.5-4 hours. Orig. art. has: 2 tables.

ASSOCIATION: Moskovskiy institut radioelectroniki i gornoy electromekhaniki (Moscow Institute of Radioelectronics and Mining Electromechanics)

SUBMITTED: 00 DATE ACQ: 02Aug63 ENCL: 00

SUB CODE: CH NO REF SOV: 002 OTHER: 006

Card 2/2

APPROVED FOR RELEASE: 03/15/2001 CIA-RDP86-00513R000100910001-9"

"APPROVED FOR RELEASE: 03/15/2001 CIA-RDP86-00513R000100910001-9

ALEKSANDROVA, Ariadna Nikolayevna, kand. khim. nauk

[Preparation, properties, and applications of synthetic high polymers] Poluchenie, svoistva i oblasti primeneniia sinteticheskikh vysokopolimerov. Moskva, Mosk. in-t radioelektroniki i gornoi elektromekhaniki, 1962. 34 p. (MIRA 17:4)

APPROVED FOR RELEASE: 03/15/2001 CIA-RDP86-00513R000100910001-9"

"APPROVED FOR RELEASE: 03/15/2001 CIA-RDP86-00513R000100910001-9

ALEKSANDROVA, A. P.

Aleksandrova, A. P. - "The characteristics of psychosis caused by the combined action of two poisons on the organism," Trudy Tsentr. in-ta psikhiatrii, Vol. IV, 1949, p. 251-58

SO: U-4934, 29 Oct 53, (Letop'i 'Zhurnal 'nykh Statey No. 16, 1949).

APPROVED FOR RELEASE: 03/15/2001 CIA-RDP86-00513R000100910001-9"

"APPROVED FOR RELEASE: 03/15/2001 CIA-RDP86-00513R000100910001-9

ALEKSANDROVA, A.P.

RAVKIN, I.G.; ALEKSANDROVA, A.P.; LANDO, L.I.; RODIN, I.I.

Reactions in chronic schizophrenia to polyvalent antiencephalitic serum used for therapeutic purposes [with summary in French]. Zhur. nevr. i psikh. 57 no.1:87-94 '57. (MLRA 10:3)

1. Nauchno-issledovatel'skiy institut psikhiatrii (dir. - prof. V.M. Banshchikov) Ministerstva zdravookhraneniya RSFSR i Institut virusologii AMN SSSR, Moskva.

(SCHIZOPHRENIA, ther.
antiencephalitis serum, causing reaction, EEG)
(IMMUNE SERUMS, ther. use
antiencephalitis serum in schizophrenia, causing reaction, EEG)
(ELECTROENCEPHALOGRAPHY, in various dis.
antiencephalitis serum ther. in schizophrenia causing reaction)

APPROVED FOR RELEASE: 03/15/2001 CIA-RDP86-00513R000100910001-9"

"APPROVED FOR RELEASE: 03/15/2001 CIA-RDP86-00513R000100910001-9

ALEKSANDROVA, A.P.; LUK'YANOV, V.S.; BANSHCHIKOV, V.M., prof., red.

[Problems in the clinical aspects, prevention, and treatment of hypotension] Voprosy kliniki, profilaktiki i lecheniia gipotonicheskoi bolezni. Pod red. V.M.Banshchikova, Moskva, zdravookhraneniia RSFSR, 1960. 83 p. (MIRA 15:1)
(HYPOTENSION)

APPROVED FOR RELEASE: 03/15/2001 CIA-RDP86-00513R000100910001-9"

"APPROVED FOR RELEASE: 03/15/2001 CIA-RDP86-00513R000100910001-9

ALEKSANDROVA, A.P., starshiy nauchnyy sotrudnik

Characteristics of the clinical aspects and course of hypotension with mental disorders. Trudy Gos.nauch-issl.inst.psikh. 25:407-421 '61. (MIRA 15:12)

1. Klinika sosudistykh psikhozov (zav. - prof. V.M.Banshchikov) Gosudarstvennogo nauchno-issledovatel'skogo instituta psikhiatrii Ministerstva zdravookhraneniya RSFSR.
(MENTAL ILLNESS) (HYPOTENSION)

APPROVED FOR RELEASE: 03/15/2001 CIA-RDP86-00513R000100910001-9"

"APPROVED FOR RELEASE: 03/15/2001 CIA-RDP86-00513R000100910001-9

BANSHCHIKOV, V.M., prof.; ALEKSANDROVA, A.P., kand.med.nauk; RYZHIKOV, G.V.

Effect of arterial hypotension on the clinical picture of cerebral atherosclerosis; a clinical observation. Trudy 1-go MMI 21:76-84'63. (MIRA 16:9)

1. Kafedra psikhiatrii (zav. - prof. V.M.Banshchikov) 1-go Moskovskogo ordena Lenina meditsinskogo instituta imeni I.M. Sechenova.

(HYPOTENSION) (CEREBRAL ARTERIOSCLEROSIS)

APPROVED FOR RELEASE: 03/15/2001 CIA-RDP86-00513R000100910001-9"

"APPROVED FOR RELEASE: 03/15/2001 CIA-RDP86-00513R000100910001-9

ALEKSANDROVA, A.P., kand. med. nauk; RYZHIKOV, G.V.

Results of hemophyrin treatment of hypotension with neuropsychic disorders. Trudy 1-go MMI 25:220-228 '63. (MIRA 17:12)

1. Kafedra psikhiatrii 1-go Moskovskogo ordena Lenina meditsinskogo instituta imeni I.M.Sechenova (zav. kafedroy V.M.Banshchikov).

APPROVED FOR RELEASE: 03/15/2001 CIA-RDP86-00513R000100910001-9"

"APPROVED FOR RELEASE: 03/15/2001 CIA-RDP86-00513R000100910001-9

ALEKSANDROVA, A.P.; RYZHIKOV, G.V.

Characteristics of the clinical picture of schizophrenia with a background of arterial hypotension; a clinical observation. Trudy 1-go MMI 34:192-197 '64. (MIRA 18:11)

1. Kafedra psikhiatrii (zav. - zasluzhennyy deyatel' nauki prof. V.M. Banshchikov) 1-go Moskovskogo ordena Lenina meditsinskogo instituta imeni Sechenova.

APPROVED FOR RELEASE: 03/15/2001 CIA-RDP86-00513R000100910001-9"

"APPROVED FOR RELEASE: 03/15/2001 CIA-RDP86-00513R000100910001-9

ALEKSANDROVA, A. S.

1166 Spectrum excitation by a [illegible]
[illegible] and S. P. Davydov [illegible]
Vestn. Leningr. Un-ta, Ser. Matem., Fiz. i Khim., 1956, (4), 51-53; *Ref. Zhur., Khim.*, 1956, Abstr. No 25 982.—The analysis [illegible] by using a low-tension generator of powerful impulse discharges (illustrated). The sample is cast in a metal mould and cut in two pieces. Before the analysis, the surface of the block is covered with a thin layer of an insulating [illegible]

[illegible] is 140 mm. The lines used for the analysis are—Sn 2840.0 and Cu 2824.4; [illegible]

[illegible] During work on the spectrum [illegible] standards the mean square error was [illegible]

APPROVED FOR RELEASE: 03/15/2001 CIA-RDP86-00513R000100910001-9"

"APPROVED FOR RELEASE: 03/15/2001 CIA-RDP86-00513R000100910001-9

Aleksandrova, A.S.

24(7) PHASE I BOOK EXPLOITATION SOV/1700

Lvov. Universitet

Materialy X Vsesoyuznogo soveshchaniya po spektroskopii, 1956. t. II: Atomnaya spektroskopiya (Materials of the 10th All-Union Conference on Spectroscopy, 1956. Vol 2: Atomic Spectroscopy) /Lvov/ Izd-vo L'vovskogo univ., 1958. 568 p. (Series: Its: Fizicheskiy sbornik, vyp.4(9)) 3,000 copies printed.

Additional Sponsoring Agency: Akademiya nauk SSSR. Komissiya po spektroskopii.

Editorial Board: G.S. Landsberg, Academician, (Resp. Ed.); B.S. Neporent, Doctor of Physical and Mathematical Sciences; I.L. Fabelinskiy, Doctor of Physical and Mathematical Sciences; V.A. Fabrikant, Doctor of Physical and Mathematical Sciences; V.G. Koritskiy, Candidate of Technical Sciences; S.M. Rayskiy, Candidate of Physical and Technical Sciences; L.K. Klimovskaya, Candidate of Physical and Mathematical Sciences; V.S. Miliyanchuk (Deceased), Doctor of Physical and Mathematical Sciences; A.Ye. Glauberman, Doctor of Physical and Mathematical Sciences; Ed.: S.L. Gazer; Tech. Ed.: T.V. Saranyuk.

PURPOSE: This book is intended for scientists and researchers in the field of spectroscopy, as well as for technical personnel using spectrum analysis in various industries.

COVERAGE: This volume contains 177 scientific and technical studies of atomic spectrography presented at the 10th All-Union Conference on Spectroscopy in 1956. The studies were carried out by members of scientific and technical institutes and include extensive bibliographies of Soviet and other sources. The studies cover many phases of spectroscopy: spectra of rare earths, electromagnetic radiation, physicochemical methods for controlling uranium production, physics and technology of gas discharge, optics and spectroscopy, abnormal dispersion in metal vapors, spectroscopy and the combustion theory, spectrum analysis of ores and minerals, photographic methods for quantitative spectrum analysis of metals and alloys, spectral determination of the hydrogen content of metals by means of isotopes, tables, and atlases of spectral lines, spark spectrographic analysis, statistical study of variation in the parameters of calibration curves, determination of traces of metals, spectrum analysis in metallurgy, thermochemistry in metallurgy, and principles and practice of spectrochemical analysis.

Card 2/31

Materials of the 10th All-Union Conference (Cont.) SOV/1700

Sventitskiy, N.S., K.A. Sukhenko, O.B. Fal'kova, P.P. Galonov, K.I. Taganov, and M.S. Alpatov. Spectrum Analysis of Titanium, Molybdenum, and Their Alloys for Nitrogen, Hydrogen, and Oxygen 225

Aleksandrova, A.S., Ye.I. Vorontsov, and S.S. Rimlyand. Work With Pulse Generators 231

Kudelya, Ye.S. Some Aspects of the Entry of Sample Components Into the Discharge With Spark Excitation of Spectra 233

Kudelya, Ye.S. Nature of the Structure Effect in Spectrum Analysis of Metal Alloys 242

Grikit, I.A. Mechanism of the Entry of the Sample Component Into the Analytic Gap and Methods for Eliminating Alloy Structure Effect on the Results of Spectrum Analysis 244

Card 15/31

APPROVED FOR RELEASE: 03/15/2001 CIA-RDP86-00513R000100910001-9"

"APPROVED FOR RELEASE: 03/15/2001 CIA-RDP86-00513R000100910001-9

ALEKSANDROVA, A.S.; VORONTSOV, Ye.I.; RIMLYAND, S.S.

Using a pulse generator. Fiz.sbor. no.4:231-238 '58.
(MIRA 12:5)

(Electric discharges) (Spectrum analysis)

APPROVED FOR RELEASE: 03/15/2001 CIA-RDP86-00513R000100910001-9"

"APPROVED FOR RELEASE: 03/15/2001 CIA-RDP86-00513R000100910001-9

ALEKSANDROVA, Ariadna Timofeyevna; BRODSKIY, S.I.; SAZHIN, I.I.; SHCHIRENKO, G.N.; GOLUBEV, V.A., inzh., red.; FRIDKIN, L.M., tekhn. red.

[Technical equipment for the manufacture of electric vacuum devices] Tekhnologicheskoe oborudovanie elektrovakuumnogo proizvodstva. Moskva, Gosenergoizdat, 1962. 300 p. (MIRA 15:6)

(Electronic industries--Equipment and supplies)

APPROVED FOR RELEASE: 03/15/2001 CIA-RDP86-00513R000100910001-9"

"APPROVED FOR RELEASE: 03/15/2001 CIA-RDP86-00513R000100910001-9

AM4017342 BOOK EXPLOITATION S/

Aleksandrova, Ariadna Timofeyevna; Brodskiy, Solomon Isayakovich; Sazhin Ivan Ivanovich; Shchirenko, Georgiy Nikolayevich

Equipment for working high-melting metals in the manufacture of electron vacuum devices (Oborudovaniye dlya obrabotki tugoplavkikh metallov v electrovakuumnom proizvodstve), Moscow, Gosenergoizdat, 1963, 79 p., illus., biblio. 9,000 copies printed.

TOPIC TAGS: high-melting metal, electron vacuum device, machining, tungsten powder, molybdenum powder, wire, rolling, laminating, electron-beam melting

PURPOSE AND COVERAGE: This booklet describes the equipment for chemical and thermal treatmen and machining refractory metals used in the manufacture of electron vacuum devices. The book is intended as a text for the section of the course "Mechanical Equipment in the Manufacture of Electron Vacuum Devices" on equipment. It can also serve as a text for students in similar specialties and can be useful to engineers, technicians, and workers engaged in the production of refractory metals.

TABLE OF CONTENTS [abridged]:

Card 1/2

APPROVED FOR RELEASE: 03/15/2001 CIA-RDP86-00513R000100910001-9"

"APPROVED FOR RELEASE: 03/15/2001 CIA-RDP86-00513R000100910001-9

AM4017342

Foreword - - 3
Introduction - - 5
Ch. I. Equipment for obtaining metallic tungsten and molybdenum powders - - 6
Ch. II. Equipment for obtaining compact tungsten and molybdenum - - 13
Ch. III. Equipment for making tungsten and molybdenum wire - - 20
Ch. IV Equipment for rolling very thin strip and laminating wire - - 53
Ch. V. Equipment for obtaining especially pure refractory metals - - 73

SUB CODE: ML SUBMITTED: 10 Jul 63 NR REF SOV: 016

OTHER: 000 DATE ACQ: 13 Mar 64

Card 2/2

APPROVED FOR RELEASE: 03/15/2001 CIA-RDP86-00513R000100910001-9"

"APPROVED FOR RELEASE: 03/15/2001 CIA-RDP86-00513R000100910001-9

ALEKSANDROVA, A.V.

Biology of Scopolia tangutica Maxim. Bot. zhur. 45 no.11:1667-1672 N '60. (MIRA 13:11)

1. Botanicheskiy institut imeni V.L.Komarova Akademii nauk SSSR, Leningrad.
(Kostroma Province--Scopolia) (Alkaloids)

APPROVED FOR RELEASE: 03/15/2001 CIA-RDP86-00513R000100910001-9"

"APPROVED FOR RELEASE: 03/15/2001 CIA-RDP86-00513R000100910001-9

ALEKSANDROVA, A. V. Cand Med Sci

Dissertation: "Comparative Evaluation of Various X-Ray Methods for Examination of Lungs After Thoracoplastic Operation in the Cast of Tuberculosis."

21 June 49

Central Inst for the Advanced Training of Physicians

SO Vecheryaya Moskva
Sum 71

APPROVED FOR RELEASE: 03/15/2001 CIA-RDP86-00513R000100910001-9"

"APPROVED FOR RELEASE: 03/20/2001 CIA-RDP86-00513R000100910001-9

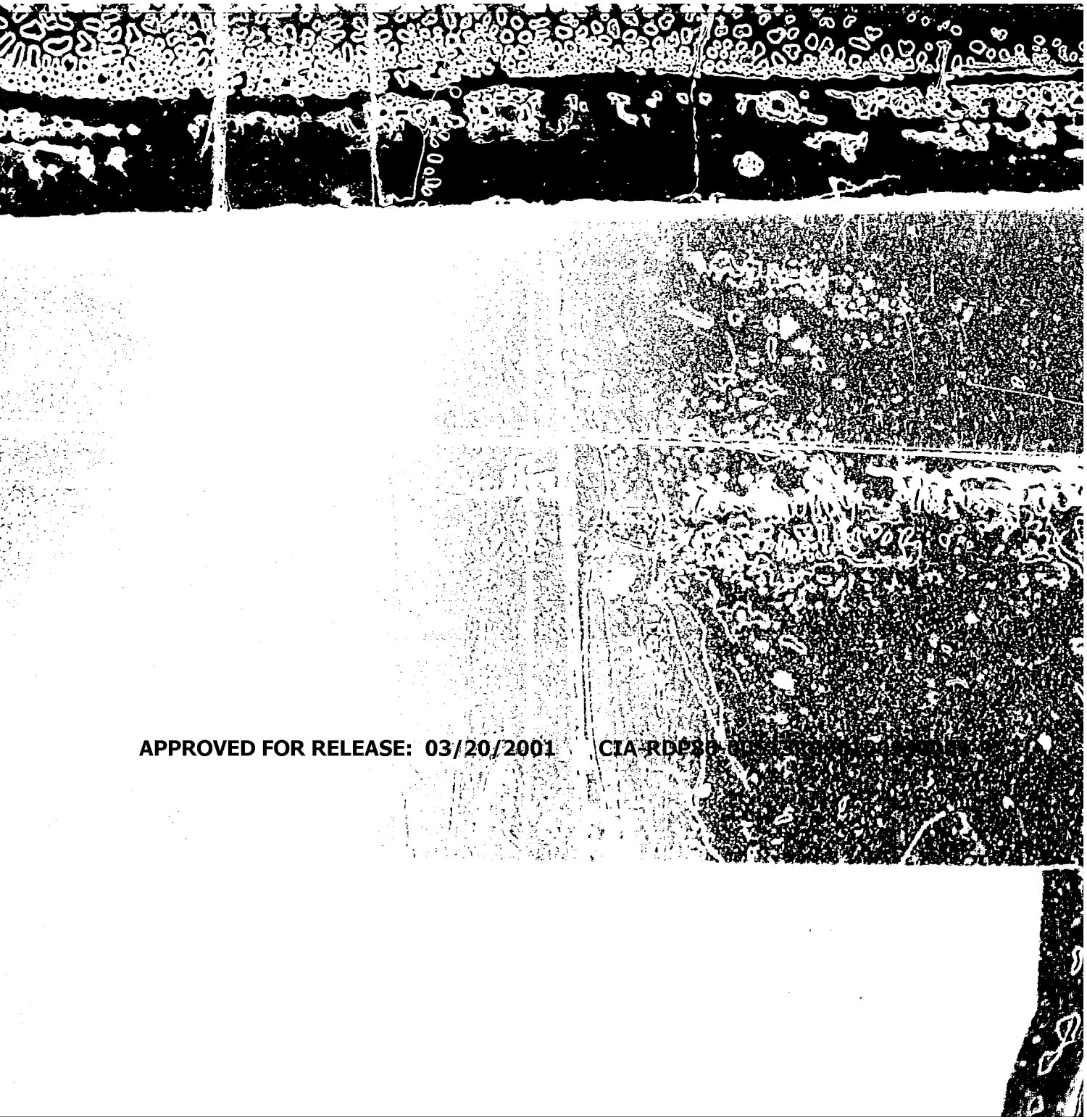

APPROVED FOR RELEASE: 03/20/2001 CIA-RDP86-00513R000100910001-9

"APPROVED FOR RELEASE: 03/20/2001 CIA-RDP86-00513R000100910001-9

L 1570-66 EWT(m)/EWA(h)

ACCESSION NR: AP5019216 UR/0056/65/049/001/0054/0065

AUTHOR: Aleksandrov, Yu. M.; Grushin, V. F.; Zapevalov, V. A.; Leykin, Ye. M.

TITLE: Photoproduction of positive pions from protons at photon energy 230 Mev and determination of the γπp coupling constant

SOURCE: Zhurnal eksperimental'noy i teoreticheskoy fiziki, v. 49, no. 1, 1965, 54-65

TOPIC TAGS: pion, muon, particle production, angular distribution, meson interaction

ABSTRACT: In view of the contradictory results of earlier measurements, the authors measured the differential cross section and the angular distribution for the photoproduction of π^+-mesons from protons at photon energy 230 Mev for the c.m.s. angles 0, 38, 82, 90, 116, 138, 146, and 180°. The experiment was performed in the bremsstrahlung beam of the 265-Mev synchrotron at FIAN (Physics Institute of the Academy of Sciences). The experimental set-up is illustrated in Fig. 1 of the Enclosure. The apparatus and data-processing procedure are described in detail. The π^+-mesons of given energy were detected by a method involving identification of the particles from their momentum and range in matter, using a magnetic spectrometer and a detector of pion stoppings, comprising a plastic-scintillation-counter telescope con-

Card 1/3

APPROVED FOR RELEASE: 03/20/2001 CIA-RDP86-00513R000100910001-9

L 1570-66

ACCESSION NR: AP5019216

taining a copper absorber of fixed thickness. The charged-particle trajectories were traced by the hot-wire method. Positive pions stopped in one of the counters were reliably identified from the $\pi \to \mu$ decay, which occurred with a characteristic time $\tau_\pi = 2.55 \times 10^{-8}$ sec. Momentum analysis of the particles was performed at 0 and 180°, and at the remaining angles only the stopping detector was used. The mean statistical accuracy was ± (3--4)%. Comparison of the experimental data with a calculation based on dispersion relations (M. I. Adamovich et al., Trudy FIAN v. 34, 1965, in press) and the use of a suitably plotted likelihood function yielded for the γπp constant a value (0.63 ± 0.11)ef (e = electron charge, f = interaction constant). The square of the interaction constant was found to equal 0.07 ± 0.11. A

"APPROVED FOR RELEASE: 03/20/2001 CIA-RDP86-00513R000100910001-9

L 1570-66
ACCESSION NR: AP5019216

ENCLOSURE: 01

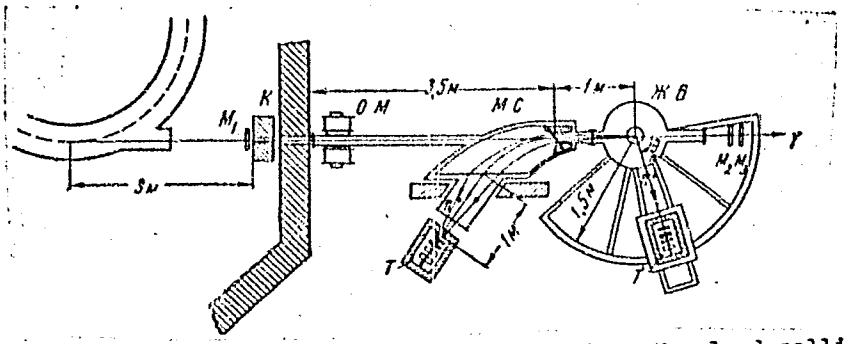

Fig. 1. Schematic diagram of experimental setup. K - lead collimators, OM - clearing magnet, MC - magnetic spectrometer, ЖВ - liquid hydrogen target, M_1, M_2, M_3 - monitor ionization chambers, T - scintillation counter telescope.

Card 3/3

APPROVED FOR RELEASE: 03/20/2001 CIA-RDP86-00513R000100910001-9

ACC NR: AR6035425 SOURCE CODE: UR/0137/66/000/009/1011/1012

AUTHOR: Aleksandrova, Yu. M.; Aleksandrov, L. N.

TITLE: Surface phenomena in the recrystallization of metals

SOURCE: Ref. zh. Metallurgiya, Abs. 9176

REF SOURCE: Sb. Poverkhnostn. yavleniya v rasplavakh i voznikayushchikh iz nikh tverd. fazakh. Nal'chik, 1965, 100-107

TOPIC TAGS: metal surface, metal recrystallization, surface property, activation energy, metal grain, rapture strength, hardness

ABSTRACT: A study of recrystallization processes yields the necessary data for the calculation of the surface energy. In the case of primary recrystallization, the following relations are used:

"APPROVED FOR RELEASE: 03/20/2001 CIA-RDP86-00513R000100910001-9

L 60859-65 EEC-4/EWG(v)/EWT(1)/FBD GW/WS-4

ACCESSION NR: AP5018071 UR/0020/65/163/001/0050/0053

57
56
B

AUTHOR: Kotel'nikov, V. A.; Aleksandrov, Yu. N.; Apraksin, L. V.; Dubrovin, V. M.; Kislik, M. D.; Kuznetsov, B. I.; Petrov, G. M.; Rzhiga, O. N.; Frantsesson, A. V.; Shakovskoy, A. M.

TITLE: Radar observations of Venus in the Soviet Union in 1964

SOURCE: AN SSSR. Doklady, v. 163, no. 1, 1965, 50-53

TOPIC TAGS: radio wave reflection, Venus radar observation, radio emission measurement, radar observation, radio astronomy

ABSTRACT: Radar observations of Venus at 40 cm were conducted between 11 and 30 June 1964 by the Institute of Radio Engineering and Electronics of the Academy of Sciences USSR. Frequency modulation and periodic linear frequency modulation of radiated signals were employed. Paramagnetic and parametric amplifiers were used at the receiver output. Signal analysis was performed by means of a 20-channel analyzer with a filter bandwidth of 1.2 cps for each channel. The reflected signal spectrum and measurements of the radial velocity of the motion of Venus were determined on the basis of the Doppler shift of the signal spectrum of the central frequency in relation to the radiation frequency. Frequency manipulation

Card 1/5

APPROVED FOR RELEASE: 03/20/2001 CIA-RDP86-00513R000100910001-9"

L 60859-65

ACCESSION NR: AP5018071

O

was effected with the radiating signal shaped as two alternating telegraphic pulse packets at two carrier frequencies differing either by 62.5 or by 2000 cps. At each frequency, pulse duration and the intervals between transmissions were 4.096 sec. Radio wave reflection from the Venusian surface and measurements of the distance to Venus were effected with linear frequency modulation. The results of the measurements of the distance to Venus and of the radial velocity of its motion are shown in Fig. 1 of Enclosure, with the vertical sections showing rms error values, which till 23 June did not exceed 15 km for 5 min of observation (at a deviation of 4 kc) and after 23 June did not exceed 2 km (at a deviation of 32 kc). Measurement error for velocity did not exceed 2.5 cm/sec. Signal propagation time was calculated with an accuracy of ±5 μsec, and Doppler frequency, with an accuracy of ±0.05 cps. The total rms error value for the initial data was ±400 km.

"APPROVED FOR RELEASE: 03/20/2001 CIA-RDP86-00513R000100910001-9

L 60859-65

ACCESSION NR: AP5018071

ASSOCIATION: Institut radiotekhniki i radioelektroniki Akademii nauk SSSR (Institute of Radio Engineering and Electronics, Academy of Sciences SSSR)

SUBMITTED: 12Apr65 ENCL: 02 SUB CODE: DC, AA

NO REF SOV: 003 OTHER: 000 ATD PRESS: 4063

Card 3/5

APPROVED FOR RELEASE: 03/20/2001 CIA-RDP86-00513R000100910001-9"

L 60859-65

ACCESSION NR: AP5018071

ENCLOSURE: 01

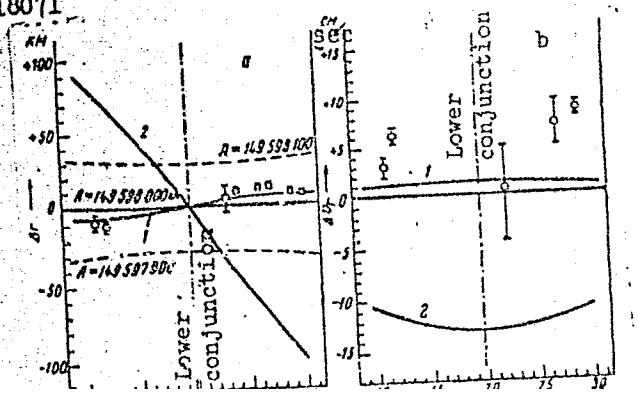

"APPROVED FOR RELEASE: 03/20/2001 CIA-RDP86-00513R000100910001-9

ALEKSANDROV, Yu.F., starshiy prepodavatel'

New members. Zashch. rast. ot vred. i bol. 9 no.9:58 '64. (MIRA 17:11)

1. Novosibirskiy sel'skokhozyaystvennyy institut.

APPROVED FOR RELEASE: 03/20/2001 CIA-RDP86-00513R000100910001-9"

"APPROVED FOR RELEASE: 03/20/2001 CIA-RDP86-00513R000100910001-9

ALEKSANDROV, Yu.P.

There are many changes in the shop. Mashinostroitel' no.3:40 Mr '61.
(MIRA 14:3)

1. Rukovoditel' brigady kommunisticheskogo truda Moskovskogo avtomobil'nogo zavoda imeni I.A. Likhacheva.
(Moscow—Automobile industry)

APPROVED FOR RELEASE: 03/20/2001 CIA-RDP86-00513R000100910001-9"

"APPROVED FOR RELEASE: 03/20/2001 CIA-RDP86-00513R000100910001-9

ALEKSANDROV, Yu.P.

Effect of aerosols on the Swedish fly. Zashch. rast. ot vred. i bol. 6 no.5:63 My '61. (MIRA 15:6)

1. Nachal'nik Altayskoy krayevoy ekspeditsii.
(Altai Territory--Frit flies)
(Aerosols)

APPROVED FOR RELEASE: 03/20/2001 CIA-RDP86-00513R000100910001-9"

"APPROVED FOR RELEASE: 03/20/2001 CIA-RDP86-00513R000100910001-9

ALEKSANDROV, Yu.P.

Seminar of Siberian forecasters. Zashch. rast. ot vred. i bol. 6 no.12:51 D '61. (MIRA 16:5)

1. Nachal'nik Altayskoy ekspeditsii po bor'be s vreditelyami, g. Barnaul.

APPROVED FOR RELEASE: 03/20/2001 CIA-RDP86-00513R000100910001-9"

"APPROVED FOR RELEASE: 03/20/2001 CIA-RDP86-00513R000100910001-9

ALEKSANDROV, Yu.P.

Sugar beet pests in the Altai. Zashch. rast. ot vred. i bol. 7 no.3:26-27 Mr '62. (MIRA 15:11)

1. Nachal'nik Altayskoy krayevoy ekspeditsii.
(Altai Territory--Sugar beets--Diseases and pests)
(DDT (Insecticide))

APPROVED FOR RELEASE: 03/20/2001 CIA-RDP86-00513R000100910001-9"

"APPROVED FOR RELEASE: 03/20/2001 CIA-RDP86-00513R000100910001-9

ALEKSANDROV, Yu.P. (Barnaul)

Forecasting service in the Altai Territory. Zashch.rast.ot vred.i bol. 7 no.5:46-48 My '62. (MIRA 15:11)

1. Nachal'nik Altayskoy ekspeditsii po bor'be s vreditelyami sel'skokhozyaystvennykh rasteniy.
(Altai Territory—Plants, Protection of)

APPROVED FOR RELEASE: 03/20/2001 CIA-RDP86-00513R000100910001-9"

"APPROVED FOR RELEASE: 03/20/2001 CIA-RDP86-00513R000100910001-9

ALEKSANDROV, Yu.P.; ALINOVSKIY, P.G.

Cooperation between science and production. Zashch. rast. ot vred. i bol. 7 no.8:4-6 Ag'62. (MIRA 15:12)

1. Nachal'nik Altayskoy krayevoy ekspeditsii (for Aleksandrov).
2. Zaveduyushchiy otdelom zashchity rasteniy Altayskogo nauchno-issledovatel'skogo instituta sel'skogo khozyaystva (for Alinovskiy).
(Altai Territory—Plants, Protection of)

APPROVED FOR RELEASE: 03/20/2001 CIA-RDP86-00513R000100910001-9"

"APPROVED FOR RELEASE: 03/20/2001 CIA-RDP86-00513R000100910001-9

ALEKSANDROV, Yu.P.; PROKOF'YEV, M.A.

Biological detachment of the Altai Expedition. Zashch. rast. ot vred. i bol. 8 no.2:58 F '63. (MIRA 16:7)

1. Nachal'nik Altayskoy ekspeditsii (for Aleksandrov). 2. Starshiy agronom biologicheskogo otryada pri Altayskoy ekspeditsii (for Prokof'yev).
(Altai Territory--Insects, Injurious and beneficial--Biological control) (Trichogramma)

APPROVED FOR RELEASE: 03/20/2001 CIA-RDP86-00513R000100910001-9"

"APPROVED FOR RELEASE: 03/20/2001 CIA-RDP86-00513R000100910001-9

DROZDOV, V.A., kand.tekhn.nauk; ALEKSANDROV, Yu.P., inzh.

Use of caps of organic glass for natural lighting of industrial buildings. Prom. stroi. 42 no.7:13-17 '65.

(MIRA 18:8)

APPROVED FOR RELEASE: 03/20/2001 CIA-RDP86-00513R000100910001-9"

"APPROVED FOR RELEASE: 03/20/2001 CIA-RDP86-00513R000100910001-9

ACC NR: AP7002088 SOURCE CODE: UR/0103/66/000/012/0047/0057

AUTHOR: Aleksandrov, Yu. S. (Leningrad); Kovshel', M. N. (Leningrad); Sorokin, A. V. (Leningrad)

ORG: none

TITLE: Method for determining statistical characteristics of phase coordinates in linear automatic control systems

SOURCE: Avtomatika i telemekhanika, no. 12, 1966, 47-57

TOPIC TAGS: automatic control system, automatic control R and D, statistic analysis, automatic control design, automatic control technology

ABSTRACT: A method of determining mathematical expectation and crosscorrelation functions of phase coordinates is set forth; the method is applicable only to linear automatic control systems describable by $\dot{x}(t) = A(t)x(t) + B(t)f(t)$, with this initial condition: $x(t)|_{t=0} = x_0$, where x(t) is the n-dimensional vector of phase coordinates (a single-column matrix of phase coordinates); A(t) is the square, n-th order, matrix of coefficients that depends on random design parameters of system k_i; with $i = 1, \ldots, m$; f(t) is the n-variate vector of external forces; B(t) is the diagonal matrix of coefficients that depends on k_i; x_0 is the n-variate vector of initial values

 UDC: 62-501.12

APPROVED FOR RELEASE: 03/20/2001 CIA-RDP86-00513R000100910001-9"

"APPROVED FOR RELEASE: 03/20/2001 CIA-RDP86-00513R000100910001-9

of the phase coordinates. The above system of differential equations is solved for t = T; and the solutions have these forms:

mathematical expectation, $M[x(T)] = \lim_{q \to \infty} M_q[x(T)]$,

crosscorrelation function, $K_{xx}(T, T_1) = \lim_{q \to \infty} K_{xxq}(T, T_1)$.

The number of realizations of random vector x(T) needed for determining the mathematical expectation is: $N = \prod_{i=1}^{n_1} q_i$ where n_1 - number of design parameters, q_i - number of realizations of the i-th design parameter. Thus, the number of x(T) realizations necessary for determining the mathematical expectation, in the above method, is equal to $1/q^{n_1}$ the number of such realizations needed in the interpolation method and in the B. G. Dostupov method. With $n_1 = 10$, the above method becomes close to the Monte-Carlo method as far as the required amount of calculations is concerned. Orig. art. has: 55 formulas

SUB CODE: 09, 13 / SUBM DATE: 25Apr66 / ORIG REF: 008

APPROVED FOR RELEASE: 03/20/2001 CIA-RDP86-00513R000100910001-9"

"APPROVED FOR RELEASE: 03/20/2001 CIA-RDP86-00513R000100910001-9

S/194/62/000/002/086/096
D271/D301

9.2580

AUTHORS: Aleksandrov, Yu. S. and Utkin, G. M.

TITLE: An oscillator circuit with improved frequency stability

PERIODICAL: Referativnyy zhurnal, Avtomatika i radioelektronika, no. 2, 1962, abstract 2-7-160a (Tr. Mosk. energ. in-ta, 1961, no. 34, 172-180)

TEXT: A variable oscillator with improved frequency stability is studied; a polygonal approximation of the anode current characteristic is assumed and grid self-bias is taken into account. Stability is improved by a compensating effect of two identically built circuits. 5 references. / Abstracter's note: Complete translation. /

Card 1/1

APPROVED FOR RELEASE: 03/20/2001 CIA-RDP86-00513R000100910001-9"

"APPROVED FOR RELEASE: 03/20/2001 CIA-RDP86-00513R000100910001-9

SOMOV, G.P.; SHAPIRO, M.I.; PETROV, A.A.; ALEKSANDROV, Yu.V.

Etiology and epidemiology of tick-borne typhus fever on the islands and coast of the Martitime Territory. Trudy VladIEMG no.2:45-50 '62. (MIRA 18:3)

APPROVED FOR RELEASE: 03/20/2001 CIA-RDP86-00513R000100910001-9"

"APPROVED FOR RELEASE: 03/20/2001 CIA-RDP86-00513R000100910001-9

ACC NR: AR6034634 SOURCE CODE: UR/0372/66/000/007/G013/G013

AUTHOR: Aleksandrov, Yu. V.

TITLE: Analytical construction of regulators for two-channel systems with antisymmetric cross couplings

SOURCE: Ref. zh. Kibernetika, Abs. 7G76

REF SOURCE: Tr. Kazansk. aviats. in-ta, vyp. 87, 1965, 66-75

TOPIC TAGS: cross coupling, antisymmetric cross coupling, regulator, regulator design, two channel system

ABSTRACT: The problem of an analytical design for A. M. Letov regulators is generalized for a case of a two-channel system with cross couplings. The equation for the system has the form $d(p)x = k(p)u$,

$$d(p) = p^n + \sum_{\alpha=0}^{n-1} d_\alpha p^\alpha; \quad k(p) = \sum_{\beta=0}^{m} k_\beta p^\beta,$$

d_α and k_β are complex numbers; $x = x_1 + ix_2$ are the controlled coordinates; $u = u_1 + iu_2$ are the actuation controls. Control u_1 and u_2 are selected from a condition of the functional minimum

Card 1/2 UDC: 62-505

APPROVED FOR RELEASE: 03/20/2001 CIA-RDP86-00513R000100910001-9"

"APPROVED FOR RELEASE: 03/20/2001 CIA-RDP86-00513R000100910001-9

ACC NR: AR6034634

$$I=\int_0^{\infty}\sum_{\alpha=0}^{n-1} a_\alpha (p^\alpha x)(p^\alpha \bar{x})\,dt+\int_0^{\infty}\sum_{\beta=0}^{m-1} a_\beta (p^\beta u)(p^\beta \bar{u})\,dt.$$

Necessary conditions for extreme conditions for the functional I are derived. The procedure for solving the derived equations is discussed. An example is analyzed. There is a bibliography of 4 items. Orig. art. has: 1 figure.

SUB CODE: 09/

Card 2/2

APPROVED FOR RELEASE: 03/20/2001 CIA-RDP86-00513R000100910001-9"

"APPROVED FOR RELEASE: 03/20/2001 CIA-RDP86-00513R000100910001-9

YAGODINSKIY, V.N.; ALEKSANDROV, Yu.V.; KOLODOCHKA, L.A.

Simple device for electrophoresis. Lab. delo. no.2:122-123 '65.
(MIRA 18:2)

APPROVED FOR RELEASE: 03/20/2001 CIA-RDP86-00513R000100910001-9"

"APPROVED FOR RELEASE: 03/20/2001 CIA-RDP86-00513R000100910001-9

ALEKSANDROV, Yu.V. (Sovetskaya Gavan'); KOLODOCHKA, L.A. (Sovetskaya Gavan'); YAGODINSKIY, V.N. (Sovetskaya Gavan')

Description of the male Macrocheles superbus Hull., 1918 (Gamasoidea, Macrochelidae). Zool. zhur. 44 no.4:608-610 '65. (MIRA 18:6)

APPROVED FOR RELEASE: 03/20/2001 CIA-RDP86-00513R000100910001-9"

"APPROVED FOR RELEASE: 03/20/2001 CIA-RDP86-00513R000100910001-9

ALEKSANDROV, Yu.V.; YAGODINSKIY, V.N.; APOLLOVA, L.N.

A new species of mites Parholaspulus bregetovae, sp. n. (Gamasoidea, Macrochelidae). Ent. oboz. 44 no.1:217-220 '65. (MIRA 18:7)

1. Meditsinskaya sluzhba Tikhookeanskogo flota.

APPROVED FOR RELEASE: 03/20/2001 CIA-RDP86-00513R000100910001-9"

"APPROVED FOR RELEASE: 03/20/2001 CIA-RDP86-00513R000100910001-9

ALEKSANDROV, Yu.V.; KOLODOCHKA, L.A.

A new species of mites, Parholaspulus jagodinskyi (Gamasoidea, Macrochelidae). Zool. zhur. 44 no.5:770-773 '65.
(MIRA 18:6)

1. Meditsinskaya sluzhba Tikhookeanskogo flota.

APPROVED FOR RELEASE: 03/20/2001 CIA-RDP86-00513R000100910001-9"

"APPROVED FOR RELEASE: 03/20/2001 CIA-RDP86-00513R000100910001-9

L 17735-66 EWT(1) GS

ACC NR: AT6006214 SOURCE CODE: UR/0000/65/000/000/0104/0110

AUTHOR: Aleksandrov, Yu. V.; Volkov, V. Ya.

43
B+1

ORG: none

21,44,55

TITLE: Grapho-analytic method for approximate determination of transfer functions from their amplitude-phase characteristics

SOURCE: AN SSSR. Institut avtomatiki i telemekhaniki. Tekhnicheskaya Kibernetika (Technical cybernetics). Moscow, Izd-vo Nauka, 1965, 104-110

TOPIC TAGS: automatic control, automatic control system, transfer function determination

ABSTRACT: A grapho-analytic method is presented for approximate determination of the transfer function of a complex dynamic system on the basis of its attenuation-phase characteristics. This method can be applied to linear systems of minimum-phase as well as of nonminimum-phase types. The transfer function of the dynamic system is taken in the form of a rational fraction for which corresponding attenuation and phase characteristics (logarithmic characteristics) A (ω) and ϕ (ω) as functions of unknown time parameters T_i, T_k, T_m, T_s, and parameters ζ_s and ζ_m are written. The problem of determining the transfer function is reduced to determining unknown parameters on the basis of graphs of A (ω) and ϕ (ω). The basic idea of the method consists in the decomposition of the attenuation characteristic A (ω) into characteristics of elementary

2

Card 1/2

APPROVED FOR RELEASE: 03/20/2001 CIA-RDP86-00513R000100910001-9"

"APPROVED FOR RELEASE: 03/20/2001 CIA-RDP86-00513R000100910001-9

L 17735-66
ACC NR: AT6006214

dynamic components and constructing their asymptotes. The time constants T_i, T_k, T_m, and T_s are determined on the basis of asymptotic attenuation characteristic of the components. To determine the unknowns ζ_s and ζ_m, the system of S + M equations is derived. The sets of parameters $\{T\}^1$ and $\{\xi\}^1$ define the first approximation of the transfer function. To obtain more exact values of parameters of the transfer function, the method of successive approximations is applied. An iterative procedure is presented. The method is illustrated by an example in which the transfer function was approximately calculated from given attenuation and phase characteristics of a certain stable dynamic system. It is stressed that this method makes it possible to calculate the transfer function with any desired accuracy and can be applied to systems with delay components. Orig. art. has: 7 formulas. [LK]

SUB CODE: 01/ SUBM DATE: 05Nov65/ ORIG REF: 003/ ATD PRESS: 4201

Card 2/2

APPROVED FOR RELEASE: 03/20/2001 CIA-RDP86-00513R000100910001-9"

"APPROVED FOR RELEASE: 03/20/2001 CIA-RDP86-00513R000100910001-9

L 34366-66 EWT(m)/EWP(t)/ETI IJP(c) JD/JG

ACC NR: AT6008411 SOURCE CODE: UR/3136/65/000/957/0001/0032

AUTHOR: Aleksandrov, Yu. V.; Aleksenko, Yu. N.; Batalov, A. A.; Buynitskaya, V. I.; Kochenov, A. S.; Sarychev, M. A.

ORG: Institute of Atomic Energy im. I. V. Kurchatov (Institut atomnoy energii)

TITLE: The study of the influence of the porosity of beryllium reflector on the flow of thermal neutrons in horizontal beams

SOURCE: Moscow. Institut atomnoy energii. Doklady, IAE-957, 1965. Issledovaniye vliyaniya skvazhnosti berilliyevogo otrazhatelya na potok teplovykh netronov v gorizontal'nykh puchkakh, 1-32

TOPIC TAGS: reactor reflector, neutron beam, neutron flux

ABSTRACT: The intensity of strong neutron fluxes (10^{10}—10^{11} n/cm^2·sec) at the exit of experimental reactor beams is in part determined by the flow of thermal neutrons at the header of the beam and by its cross section. In turn, these depend on the properties of the reflector. Since the authors were unable to imitate on the critical stand the active zone with the required spectral composition of the neutrons, they imitated the "thermal" active zone by establishing the appropriate distribution of the thermal neutron flux within the beryllium reflector. This was achieved by placing a 0.5-mm thick cadmium filter between the active zone and the reflector. The present article describes the critical stand used and the methodology of the

Card 1/2

Card 2/2

APPROVED FOR RELEASE: 03/20/2001 CIA-RDP86-00513R000100910001-9"

"APPROVED FOR RELEASE: 03/20/2001 CIA-RDP86-00513R000100910001-9

L 16878-66 EWT(1)/FCC GW

ACC NR: AR6016282 SOURCE CODE: UR/0269/66/000/001/0027/0028

45
B

AUTHOR: Aleksandrov, Yu. V.

TITLE: Diffuse light reflection by a plane semi-infinite almost dispersive atmosphere

SOURCE: Ref. zh. Astronomiya, Abs. 1.51.237

REF SOURCE: Vestn. Khar'kovsk. un-ta, no. 4, ser. astron., vyp. 1, 1965, 103-107

TOPIC TAGS: atmosphere, light scattering, light reflection, light diffusion, Legendre polynomial, approximation

ABSTRACT: Approximate expressions are obtained for functions in terms of which the intensity of radiation diffusely reflected from a semi-infinite atmosphere is expressed. It is assumed that the scattering indicatrix has the form

$$x(\gamma) = 1 + x_1 P_1(\cos\gamma) + x_2 P_2(\cos\gamma),$$

where γ is the scattering angle; $P_n(\cos\gamma)$ Legendre polynomials. It is also assumed that the survival of a quantum in the presence of scattering is close to unity. Approximations of the type of Eddington and Schwartzschild-Schuster are used. V. I. [Translation of abstract]

SUB CODE: 20, 04, 03

Card 1/1 pla

UDC: 523.035.18

APPROVED FOR RELEASE: 03/20/2001 CIA-RDP86-00513R000100910001-9"

"APPROVED FOR RELEASE: 03/20/2001 CIA-RDP86-00513R000100910001-9

L 06350-67 EWT(1) GW

ACC NR: AR6013404 SOURCE CODE: UR/0269/65/000/011/0060/0060

36
B

AUTHOR: Aleksandrov, Yu. V.

TITLE: Determination of the optical parameters of the planets from observations near opposition

SOURCE: Ref. zh. Astronomiya, Abs. 11.51.514

REF SOURCE: Vestn. Khar'kovsk. un-ta, no. 4, 1965, ser. astron., vyp. 1, 99-102

TOPIC TAGS: planetary atmosphere, optic measurement, optic property, Jupiter planet

ABSTRACT: It is noted that for small values of planetary phase angle the use of the least squares method to determine the optical parameters of the planetary atmosphere and surface leads to a very poorly specified system of normal equations. A method for determining the optical parameters of the planets from observations near opposition is proposed which, in the author's opinion, allows this difficulty to be overcome. This method is based on the use of dispersion analysis and permits finding the most probable values of the optical parameters and also the greatest number of parameters which can be determined from the observation data. Some results of data analysis of photographic photometry of Jupiter are presented as an example. L. Lisina [Translation of abstract]

SUB CODE: 03

UDC: 523.40

Card 1/1 mLE

APPROVED FOR RELEASE: 03/20/2001 CIA-RDP86-00513R000100910001-9"

"APPROVED FOR RELEASE: 03/20/2001 CIA-RDP86-00513R000100910001-9

ALEKSANDROV, Yu.Ye., kapitan 3-go ranga

Carrying out a maneuver. Mor. sbor. 47 no.4:58-59 Ap '64.
(MIRA 18:7)

APPROVED FOR RELEASE: 03/20/2001 CIA-RDP86-00513R000100910001-9"

"APPROVED FOR RELEASE: 03/20/2001 CIA-RDP86-00513R000100910001-9

ALEKSANDROV-DOL'NIK, M., kand.yurid.nauk

Legal bases for the organization of transportation operations.
Avt.transp. 40 no.2:15-17 F '62. (MIRA 15:2)
(Transportation, Automotive--Laws and regulations)

APPROVED FOR RELEASE: 03/20/2001 CIA-RDP86-00513R000100910001-9"

"APPROVED FOR RELEASE: 03/20/2001 CIA-RDP86-00513R000100910001-9

ALEKSANDROVA, A.; GLINKA, N.

Determining the sugar content of liquid hematogen by means of a saccharimeter. Mias.ind.SSSR 24 no.3:87 My-Je '53. (MLRA 6:7)

(Hematogen)

1. Leningradskiy myasokombinat.
(CA 47 no.21:11309 '53)

3

APPROVED FOR RELEASE: 03/20/2001 CIA-RDP86-00513R000100910001-9"

"APPROVED FOR RELEASE: 03/20/2001 CIA-RDP86-00513R000100910001-9

MEYEROVICH, L.A.; ZELICHENKO, L.G.; ALEKSANDROVA, A.A., red.; URAZOVA, A.N., tekhn. red.

[Pulse techniques] Impul'smaia tekhnika. Moskva, Izd-vo "Sovetskoe radio," 1953. 829 p. (MIRA 16:7)
(Pulse techniques (Electronics))

APPROVED FOR RELEASE: 03/20/2001 CIA-RDP86-00513R000100910001-9"

"APPROVED FOR RELEASE: 03/20/2001 CIA-RDP86-00513R000100910001-9

SIVERS, Arkadiy Petrovich; SUSLOV, Nikolay Aleksandrovich; ALEKSANDROVA, A.A., redaktor; KORUZEV, N.N., tekhnicheskiy redaktor.

[Fundamentals of radar] Osnovy radiolokatsii. Moskva, Izd-vo "Sovetskoe radio, 1956. 246 p. (MLRA 9:5)
(Radar)

APPROVED FOR RELEASE: 03/20/2001 CIA-RDP86-00513R000100910001-9"

"APPROVED FOR RELEASE: 03/20/2001 CIA-RDP86-00513R000100910001-9

ALEKSANDRO A, A.A.

VAYNSHTEYN, Lev Al'bertovich; ALEKSANDROVA, A.A., redaktor; KORUZEV, N.N., tekhnicheskiy redaktor

[Electromagnetic waves] Elektromagnitnye volny. Moskva, Izd-vo "Sovetskoe radio," 1957. 580 p. (MLRA 10:9)
(Electric waves)

APPROVED FOR RELEASE: 03/20/2001 CIA-RDP86-00513R000100910001-9"

"APPROVED FOR RELEASE: 03/20/2001 CIA-RDP86-00513R000100910001-9

GINZBURG, Vera Moiseyevna; BELOVA, Inessa Nikolayevna; ALEKSANDROVA, A.A., red.; SMUROV, B.V., tekhn. red.

[Calculation of parabolic antennas] Raschet parabolicheskikh antenn. Izd-vo "Sovetskoe radio," 1959. 249 p. (MIRA 13:2)
(Antennae (Electronics))

APPROVED FOR RELEASE: 03/20/2001 CIA-RDP86-00513R000100910001-9"

"APPROVED FOR RELEASE: 03/20/2001 CIA-RDP86-00513R000100910001-9

SHISHONOK, Nikolay Andreyevich; REPKIN, Vasiliy Fedorovich; BARVINSKIY, Leonid L'vovich; Prinimali uchastiye LERNER, V.Yu.; LASTOVCHENKO, M.M.; KREDENTSER, B.P.; USHAKOV, I.A.; BARZILOVICH, Ye.Yu.; SENETSKIY, S.A.; ALEKSANDROVA, A.A., red.; GUTCHINA, N.Ya., red.; LYUBIMOVA, T.M., red.

[Principles of the theory of the reliability and operation of radioelectronic apparatus] Osnovy teorii nadezhnosti i ekspluatatsii radioelektronnoi tekhniki. Moskva, Sovetskoe radio, 1964. 550 p. (MIRA 18:2)

APPROVED FOR RELEASE: 03/20/2001 CIA-RDP86-00513R000100910001-9"

"APPROVED FOR RELEASE: 03/20/2001 CIA-RDP86-00513R000100910001-9

BERGEL'SON, I.G.; DADERKO, N.K.; PAROL', N.V.; PETUKHOV, V.M.;
ALEKSANDROVA, A.A., red.; SMUROV, B.V., tekhn. red.

[Receiving and amplifing tubes with increased reliability]
Priemno-usilitel'nye lampy povyshennoi nadezhnosti; spravochnik.
Moskva, Izd-vo "Sovetskoe radio," 1962. 647 p. (MIRA 15:7)
(Electron tubes--Handbooks, manuals, etc.)

APPROVED FOR RELEASE: 03/20/2001 CIA-RDP86-00513R000100910001-9"

"APPROVED FOR RELEASE: 03/20/2001 CIA-RDP86-00513R000100910001-9

STAL'MAKHOV, V.S.; KOSTENKO, A.I., nauchnyy red.; ALEKSANDROVA, A.A., red.; BELYAYEVA, V.V., tekhn. red.

[Fundamentals of the electronics of superhigh frequency crossed-field devices] Osnovy elektroniki sverkhvysoko-chastotnykh priborov so skreshchennymi poliami. Moskva, Sovetskoe radio, 1963. 365 p. (MIRA 16:6)
(Microwaves) (Microwave tubes)

APPROVED FOR RELEASE: 03/20/2001 CIA-RDP86-00513R000100910001-9"

"APPROVED FOR RELEASE: 03/20/2001 CIA-RDP86-00513R000100910001-9

BAKUT, P.A.; BOL'SHAKOV, I.A.; GERASIMOV, B.M.; KURIKSHA, A.A.; REPIN, V.G.; TARTAKOVSKIY, G.P., prof.; SHIROKOV, V.V.; ALEKSANDROVA, A.A., red.; BELYAYEVA, V.V., tekhn. red.

[Problems of the statistical theory of radar] Voprosy statisticheskoi teorii radiolokatsii. [By] P.A.Bakut i dr. Pod obshchei red. G.P.Tartakovskogo. Moskva, Sovetskoe radio. Vol.1. 1963. 423 p. (MIRA 16:5)
(Radar)

APPROVED FOR RELEASE: 03/20/2001 CIA-RDP86-00513R000100910001-9"

"APPROVED FOR RELEASE: 03/20/2001 CIA-RDP86-00513R000100910001-9

MARKOV, Vladimir Vasil'yevich; ALEKSANDROVA, A.A., red.; OSHEROVICH,L.G., retsenzent; KALABEKOV,B.A.,retsenzent; ALEKSANDROVA,A.A.,red.; BELYAYEVA,V.V.,tekhn.red.

[Radio relay lines with a limited number of channels] Malokanal'nye radiorelейnye linii svia_i. Moskva, "Sovetskoe radio," 1963. 704 p. (MIRA 17:2)

APPROVED FOR RELEASE: 03/20/2001 CIA-RDP86-00513R000100910001-9"

"APPROVED FOR RELEASE: 03/20/2001 CIA-RDP86-00513R000100910001-9

LUKOSHKIN, Anatoliy Petrovich. Prinimal uchastiye GOLUBKOV, A.P., inzh.; ALEKSANDROVA, A.A., red.

[Radar amplifiers with a wide input signal range] Radiolokatsionnye usiliteli s bol'shim diapazonom vkhodnykh signalov. Moskva, Sovetskoe radio, 1964. 254 p.
(MIRA 17:10)

APPROVED FOR RELEASE: 03/20/2001 CIA-RDP86-00513R000100910001-9"

"APPROVED FOR RELEASE: 03/20/2001 CIA-RDP86-00513R000100910001-9

BAKUT, P.A.; BOL'SHAKOV, I.A.; GERASIMOV, B.N.; KURIKSHA, A.A.; REPIN, V.G.; TARTAKOVSKIY, G.P., prof.; SHIROKOV, V.V.; ALEKSANDROVA, A.A., red.

[Problems in statistical radar theory] Voprosy statisticheskoi teorii radiolokatsii [By] P.A.Bakut i dr. Moskva, Sovetskoe radio. Vol.2. 1964. 1078 p. (MIRA 17:9)

APPROVED FOR RELEASE: 03/20/2001 CIA-RDP86-00513R000100910001-9"

"APPROVED FOR RELEASE: 03/20/2001 CIA-RDP86-00513R000100910001-9

VASIL'YEV, Boris Vasil'yevich; KOZLOV, Boris Anatol'yevich; TKACHENKO, Leonid Grigor'yevich; ALEKSANDROVA, A.A., red.

[Reliability and efficiency of radio-electronic devices] Nadezhnost' i effektivnost' radioelektronnykh ustroistv. Moskva, Sovetskoe radio, 1964. 367 p. (MIRA 17:12)

APPROVED FOR RELEASE: 03/20/2001 CIA-RDP86-00513R000100910001-9"

"APPROVED FOR RELEASE: 03/20/2001 CIA-RDP86-00513R000100910001-9

KATSENBOGEN, Mikhail Solomonovich; ZUBKOV, V.D., retsenzent;
SMIRNOV, B.A., retsenzent; ALEKSANDROVA, A.A., red.

[Characteristics of radar detection] Kharakteristiki obnaruzheniia. Moskva, Sovetskoe radio, 1965. 95 p.
(MIRA 18:4)

APPROVED FOR RELEASE: 03/20/2001 CIA-RDP86-00513R000100910001-9"

"APPROVED FOR RELEASE: 03/20/2001 CIA-RDP86-00513R000100910001-9

BRUYEVICH, A.N.; YEVTYANOV, S.I.; ALEKSANDROVA, A.A., red.

[Approximation of nonlinear characteristics and the spectra under harmonic action] Aproksimatsiia nelineinykh kharakteristik i spektry pri garmonicheskom vozdeistvii. Moskva, Sovetskoe radio, 1965. 343 p.
(MIRA 18:8)

APPROVED FOR RELEASE: 03/20/2001 CIA-RDP86-00513R000100910001-9"

"APPROVED FOR RELEASE: 03/20/2001 CIA-RDP86-00513R000100910001-9

ALEKSANDROVA, A. G., AND POLYANSKAYA, V. A.

The Wind-Power Resources of Voronezhskaya Oblast

The purpose of the work is to clarify the reserves of wind energy in the territory of Voronezhskaya Oblast's. The mean annual velocities of the wind according to a number of stations in Voronezhskaya Oblast are reduced to the altitude 15 meters of a wind gauge, and corrections made for local conditions. largest number of days with strong wind is observed in January and February, the least in the summer months. The largest number of days with calm is observed in summer. The presented table of mean annual powers of an ideal wind engine, according to data of the meterological stations of Voronezhskaya Oblast, is computed by means of the formula $N = 0.000481\ D^2v^3E_{max}$, in kilowatts, where D is the diameter of the wheel, v is the wind velocity, and E_{max} is the maximum coefficient of utilization of wind energy of the ideal windmill $E_{max} = 0.593$). The wind velocities chosen were the mean annual velocities reduced to height 15 meters above the surface of the earth, and corrected for local conditions surrounding the wind gauge. A table of mean annual powers of a wind engine was computed taking into account the frequency of wind velocities from 3 to 10 meters/second according to the formula: N =

APPROVED FOR RELEASE: 03/20/2001 CIA-RDP86-00513R000100910001-9"

"APPROVED FOR RELEASE: 03/20/2001 CIA-RDP86-00513R000100910001-9

$0.000481\ (D^2E/n).(v_3^3n_3 + \ldots + v_{10}^3n_{10})$, in kilowatts, where the v's are the operating wind velocities from 3 to 10 meters/second, and the n's are the frequencies of the velocities corresponding; n designates the sum of the n's. If in the table of the mean annual powers of a wind engine all the data are multiplied by 0.65 (i.e., coefficient 0.38 is used instead of 0.593), then one obtains the power of an actual wind engine. (RZhGeol, No. 5, 1955) Tr. Voronezhsk. un-ta, 30, 1954, 33-40.

SO: Sum. No. 744, 8 Dec 55 - Supplementary Survey of Soviet Scientific Abstracts (17)

APPROVED FOR RELEASE: 03/20/2001 CIA-RDP86-00513R000100910001-9"

"APPROVED FOR RELEASE: 03/20/2001 CIA-RDP86-00513R000100910001-9

ALEKSANDROVA, A.G.; POLYANSKAYA, V.A.

The cycle of winds in Voronezh and adjoining (Kamensk, Belgorod, and Lipetsk) provinces. Trudy VGU 42 no.4:77-78 '55. (MIRA 11:6)
(Voronezh Province--Winds)

APPROVED FOR RELEASE: 03/20/2001 CIA-RDP86-00513R000100910001-9"

"APPROVED FOR RELEASE: 03/20/2001 CIA-RDP86-00513R000100910001-9

ALEKSANDROVA, A.G.

Vertical atmospheric stratification during glazed frost conditions.
Trudy GGO no.75:78-81 '57. (MIRA 11:3)
(Frost)

APPROVED FOR RELEASE: 03/20/2001 CIA-RDP86-00513R000100910001-9"

"APPROVED FOR RELEASE: 03/20/2001 CIA-RDP86-00513R000100910001-9

VOLGINA, K.P.; SHKURINA, A.M.; ALEKSANDROVA, A.G.

How methods of cultivating olf fallows affect the content of protein and the quality of gluten in wheat. Trudy Biol. inst. Zap.-sib. fil. AN SSSR no.3:245-252 '57. (MIRA 13:10)
(Tillate) (Wheat) (Gluten)

APPROVED FOR RELEASE: 03/20/2001 CIA-RDP86-00513R000100910001-9"

"APPROVED FOR RELEASE: 03/20/2001 CIA-RDP86-00513R000100910001-9

ALEKSANDROVA, A.G.

Photocolorimetric determination of phosphorus in vegetable material by the use of phosphomolybdovanadic heteropolyacid. Izv. Sib. otd. AN SSSR no.6:108-110 '62 (MIRA 17:7)

APPROVED FOR RELEASE: 03/20/2001 CIA-RDP86-00513R000100910001-9"

"APPROVED FOR RELEASE: 03/20/2001 CIA-RDP86-00513R000100910001-9

SOV/137-58-8-16493

Translation from: Referativnyy zhurnal, Metallurgiya, 1958, Nr 8, p 37 (USSR)

AUTHORS: Aleksandrova, A.I., Oyks, G.N., Bannyy, N.P.

TITLE: Manufacture of Steel From High-P Cast Iron (Proizvodstvo stali iz vysokofosforistogo chuguna)

PERIODICAL: Sb. Mosk. in-t stali, 1957, Vol 37, pp 281-304

ABSTRACT: An analysis of 120 experimental smeltings performed in metallurgical furnaces employing air with 25-30% of O_2. By employing O_2 the duration of the smelting process is reduced by 8% in the case of silica-brick furnace crowns (SC) and by 33% in the case of furnaces with basic crowns (BC); this reduction in time is accomplished primarily through a foreshortening of the melting and finishing stages. As the content of O_2 is increased from 25 to 30%, the duration of the smelting process diminishes continuously by 6.5-10.7% (in case of SC) and 14-36% (in the case of BC). Introduction of O_2 into the flame, increasing the amount of ore in the upper layers of friable ingredients, smelting procedures which allow slag to remain on the bottom of the hearth - all these measures speed up the processes of slag formation, dephosphorization, and

Card 1/2

APPROVED FOR RELEASE: 03/20/2001 CIA-RDP86-00513R000100910001-9"

"APPROVED FOR RELEASE: 03/20/2001 CIA-RDP86-00513R000100910001-9

Manufacture of Steel From High-P Cast Iron

saturation of slag with P_2O_5. Compared with smelting operations performed without oxygen in furnaces with SC's, the introduction of O_2 into the flame reduced the fuel consumption in furnaces with BC's by 15-18%. Annual output of furnaces employing O_2 increased by 5% in the case of SC furnaces and by 30.8% in the case of BC furnaces in comparison with BC furnaces employing no oxygen. The production cost of steel smelted in BC furnaces employing O_2 is less by 3 rubles than the cost of regular steel. Employment of phosphate slags will reduce the production costs by 17.6 rubles. Additional capital expenditures connected with the employment of O_2 can be recovered within approximately four years.

Ye.T.

1. Steel--Production 2. Furnaces--Operation 3. Cast iron--Properties
4. Phosphorus--Oxidation 5. Oxygen--Performance

APPROVED FOR RELEASE: 03/20/2001 CIA-RDP86-00513R000100910001-9"

"APPROVED FOR RELEASE: 03/20/2001 CIA-RDP86-00513R000100910001-9

PROBST, Abram Yefimovich, prof., doktor ekonomicheskikh nauk,; ALEKSANDROVA, Antonina Ivanovna,; BRODSKIY, Viktor Borisovich,; OVSYANNIKOV, Vasiliy Ivanovich,; ROZENTRETER, Avenir Borisovich,;

[Prospects for developing the production of cast iron in electric furnaces in the eastern part of the U.S.S.R. (Eastern Siberia and the Far East). Perspektivy razvitiia vyplavki chuguna v elektricheskikh pechakh na Vostoke SSSR(Vostochnaia Sibir' i Dalnii Vostok). Moskva, Izd-vo Akad. nauk SSSR, 1958. 151 p. (MIRA 11:12)

(Far East--Cast iron)
(Siberia, Eastern--Cast iron)

APPROVED FOR RELEASE: 03/20/2001 CIA-RDP86-00513R000100910001-9"

"APPROVED FOR RELEASE: 03/20/2001 CIA-RDP86-00513R000100910001-9

ALEKSANDROVA, A. I., (Candidate of Technical Sciences)

"Prospects of Development of Electric Blast Furnace Production in the East of the USSR (Eastern Siberia and the Far East)".

for this work author received award by the Academy of Sciences of the USSR, 1957.
Priroda, No. 2, 1958. pp. 113-114.

APPROVED FOR RELEASE: 03/20/2001 CIA-RDP86-00513R000100910001-9"

"APPROVED FOR RELEASE: 03/20/2001 CIA-RDP86-00513R000100910001-9

ALEKSANDROVA, A.I.

PHASE I BOOK EXPLOITATION SOV/4252

Akademiya nauk SSSR. Sovet po izucheniyu proizvoditel'nykh sil

Chernaya metallurgiya (Ferrous Metallurgy) Moscow, Izd-vo AN SSSR, 1960. 275 p. (Series: Razvitiye proizvoditel'nykh sil Vostochnoy Sibiri) Errata slip inserted. 2,000 copies printed.

Ed.: G.I. Lyudogovskiy, Candidate of Technical Sciences; Ed. of Publishing House: G.M. Makovskiy; Tech. Ed.: Ye.V. Makuni; Editorial Board of this vol.: S.S. Dvorin, N.V. Ovchinnikiy, Candidate of Technical Sciences, A.N. Pokhvisnev, Doctor of Technical Sciences, and A.A. Fedotov, Engineer; Editorial Board of Series: I.P. Bardin, (Deceased), Academician, Academy of Sciences USSR (Chief. Ed.); M.A. Lavrent'yev, Academician, Academy of Sciences USSR; S.I. Vol'fkovich, Academician, Academy of Sciences USSR; V.I. Dikushin, Academician, Academy of Sciences USSR; V.S. Nemchinov, Academician, Academy of Sciences USSR; V.I. Veyts, Corresponding Member, Academy of Sciences USSR; O.D. Levitskiy, Corresponding Member, Academy of Sciences USSR; N.N. Nekrasov, Corresponding Member, Academy of Sciences USSR; L.B. Pustovalov, Corresponding Member, Academy of Sciences USSR; T.S. Khachaturov, Corresponding Member, Academy of Sciences USSR; N.F. Rostovtsev, Academician, All-Union Academy of Agricultural Science; A.N. Popov, Member, Academy of Building and Architecture USSR; L. Ye. Grafov, Deputy Chairman, State Planning Committee of the Council of Ministers RSFSR; A.D. Goshev, Member, State Planning Committee of the Council of Ministers RSFSR; A.Ye. Probst, Professor; V.F. Vasyutin, Professor; V.A. Krotov, Professor; P.V. Vasil'yev, Doctor of Economics; G.I. Lyudogovskiy, Candidate of Technical Sciences; P.A. Letunov, Candidate of Geology and Mineralogy; and M.G. Shkol'nikov, Candidate of Economics.

PURPOSE: This collection of papers is intended to furnish information on industrial resources in Eastern Siberia and to provide a basis for future developmental planning in the field of ferrous metallurgy..

COVERAGE: The collection is a summary of the proceedings of the Ferrous Metallurgy Section of the Joint Conference of Representatives of the Academy of Sciences USSR, the State Planning Commission, and the Council of Ministers RSFSR on the Development of the Industrial Resources of Eastern Siberia. The collection deals with four main areas of development in Eastern Siberia: 1) Mineral resources, 2) the fuel base, 3) prospects for the development of ferrous metallurgy, and 4) problems in the development of electrometallurgy. A list of the 112 members of the Section with their affiliations is given in the Appendix. References accompany several of the articles.

Makarov, V.S. Present Reserves and Prospects of Utilization of Ferrous-Metal Scrap in Eastern Siberia 200

Review of Addresses on Reports Dealing With the Development of Ferrous Metallurgy in Eastern Siberia 206

SECTION IV. PROBLEMS IN THE DEVELOPMENT OF ELECTROMETALLURGY IN EASTERN SIBERIA

Probst, A. Ye. Prospects for the Development of Electric Pig Iron Production in Eastern Siberia 215

Aleksandrova, A.I. and A.B. Rozentreter. On the Problem of Conversion of Electric Cast Iron Into Steel 227

Fedotov, A.A. Effectiveness of Hydrogen Production From Flue Gases of Electric Low-Shaft Furnaces 256

Card 7/8

APPROVED FOR RELEASE: 03/20/2001 CIA-RDP86-00513R000100910001-9"

"APPROVED FOR RELEASE: 03/20/2001 CIA-RDP86-00513R000100910001-9

ACCESSION NR: AT4010218 S/3056/63/000/000/0003/0013

AUTHOR: Aleksandrova, A. K.; By*zova, N. L.; Mashkova, G. B.

TITLE: Experiments on the dissemination of precipitating contaminants from a point source in the lower atmosphere

SOURCE: Issledovaniye nizhnego 300-metrovogo sloya atmosfery*. Moscow, 1963, 3-13

TOPIC TAGS: meteorology, air pollution, precipitating contaminant, point source contamination, lower atmosphere, turbulent diffusion

ABSTRACT: In calculating the diffusion of either precipitating or weightless contaminants in the boundary layer of the atmosphere, a phenomenon which depends both on the properties of the contaminant particles and on the turbulence of the air, the maximum concentration of contaminants and the distance of this point from the source are of considerable interest. The authors therefore present the results of 53 experiments. and derive formulas for these parameters on the basis of 2 systems of calculation, assuming either that the coefficient of vertical turbulent diffusion increases linearly with height, or that it is independent of height. For this purpose, 4 types of atmospheric stratification were distinguished (indifferent stratification and 3 degrees of instability), and inversions were not considered. As shown by graphs relating the height of the source to the dis-

Card 1/2

APPROVED FOR RELEASE: 03/20/2001 CIA-RDP86-00513R000100910001-9"

"APPROVED FOR RELEASE: 03/20/2001 CIA-RDP86-00513R000100910001-9

ACCESSION NR: AT4010218

tance between it and the point of maximum contaminant precipitation, as well as the relationships between atmospheric turbulence and the maximum contaminant concentration or length of the contaminated zone, the distance from the source to the area of maximum contaminant density, corrected for the effect of gravity, was proportional to the height of the source within each type of stratification and within the altitude range of 25-300 meters (error of ± 25%). The parameters of horizontal diffusion were determined by the type of stratification, while the position and magnitude of the maximum contaminant density and the length of the contaminated zone were determined by the ratio between the gravitational forces and the turbulence. At relatively high turbulence, the first type of calculation yielded better results for the maximum contaminant density, but the second type of calculation was preferable for determining the length of the contaminated zone; at relatively low turbulence, the method of calculation was immaterial. Orig. art. has: 3 tables, 5 figures and 12 formulas.

ASSOCIATION: none

SUBMITTED: 00 DATE ACQ: 20Feb64 ENCL: 00

SUB CODE: AS NO REF SOV: 009 OTHER: 003

Card 2/2

APPROVED FOR RELEASE: 03/20/2001 CIA-RDP86-00513R000100910001-9"

"APPROVED FOR RELEASE: 03/20/2001 CIA-RDP86-00513R000100910001-9

ACCESSION NR: AT4009671 S/2937/63/000/000/0155/0159

AUTHOR: Aleksandrova, A. K.

TITLE: A method of investigating the dispersion of an artificial aerosol in the surface layer

SOURCE: Izucheniye pogranichnogo sloya atmosfery* s 300-metrovoy meteorologi-cheskoy bashni. Moscow, 1963, 155-159

TOPIC TAGS: meteorological tower, artificial aerosol, polymethyl methacrylate

ABSTRACT: The 300-meter meterological tower has been used for an experiment involving the propagation of admixtures in the surface layer. The admixture used was a luminescent polymethyl methacrylate powder, whose advantages were described in the preceding article in the monograph. A special apparatus, illustrated and described in the text, was used for introducing the aerosol into the atmosphere. The apparatus holds 10 kg of powder and can introduce it into the atmosphere at the rate of 0.2 to 2 kilograms per hour. The particles were trapped at distances of 15 to 20 kilometers from the tower. Conclusions are drawn concerning the influence of the underlying surface on the transport of the admixture. Particles were trapped at 50 to 100 stations at distances of 25 meters to 1 kilometer apart. The processing method is described. Orig. art. has: 5 figures.

Card 1/2

Inst. Applied Geophysics

APPROVED FOR RELEASE: 03/20/2001 CIA-RDP86-00513R000100910001-9"

"APPROVED FOR RELEASE: 03/20/2001 CIA-RDP86-00513R000100910001-9

ALEKSANDROVA, A.M.

New data on the mothodology of peridural antsthesia in gynecological surgery. Akush. i gin. no.2:26-31'63.(MIRA 16:10)

1. Iz ginekologicheskoy kliniki (rukovoditel' - prof. M.S. Aleksandrov) Moskovskogo gorodskogo ordena Trudovogo Krasnogo Znameni nauchno-issledovatel'skogo instituta skoroy pomoshchi imeni N.V.Sklifosovskogo (dir. - zasluzhennyy vrach UkrSSR M.M.Tarasov).

(GYNECOLOGY, OPERATIVE) (SPINAL ANESTHESIA)

APPROVED FOR RELEASE: 03/20/2001 CIA-RDP86-00513R000100910001-9"

"APPROVED FOR RELEASE: 03/20/2001 CIA-RDP86-00513R000100910001-9

ALEKSANDROVA, A. M.

4

CA

Behavior of the glass electrode in nonaqueous solutions. IV. Errors of the glass electrode in the acid and the alkaline region in ethanol and in ethanol-water mixtures. N. A. Izmailov and A. M. Aleksandrova. *Zhur. Obshchei Khim.* (J. Gen. Chem.) 19, 1403-15(1949); cf. C.A. 41, 1144g.—In MeOH, EtOH, and in mixts. EtOH + H_2O, the calibration curve of the Hughes and the MacInnes and Dole glass electrodes in the alk. region passes through a max. With increasing amt. of EtOH, the max. moves to more strongly alk. values. In the acid region (HCl), the sign of the deviation from linearity between the potential and the pH is opposed to that in the alk. region. The calibration curve passes through a min. which shifts to less acid values with increasing amt. of EtOH. The ion-exchange coeff. K increases from H_2O to the abs. alks. Thus, from $K = 6.31 \times 10^{-10}$ in H_2O, it increases, for the glasses of Hughes and of MacInnes and Dole, to 8.0×10^{-7} and 2.0×10^{-7}, resp., in abs. EtOH, and to 2.82×10^{-10} and 2.82×10^{-11}, resp., in abs. MeOH. While the glass electrode remains perfectly usable in mixts. of EtOH and MeOH with H_2O, the range of its applicability becomes narrower with increasing alc. content. N. Thon

APPROVED FOR RELEASE: 03/20/2001 CIA-RDP86-00513R000100910001-9"

"APPROVED FOR RELEASE: 03/20/2001 CIA-RDP86-00513R000100910001-9

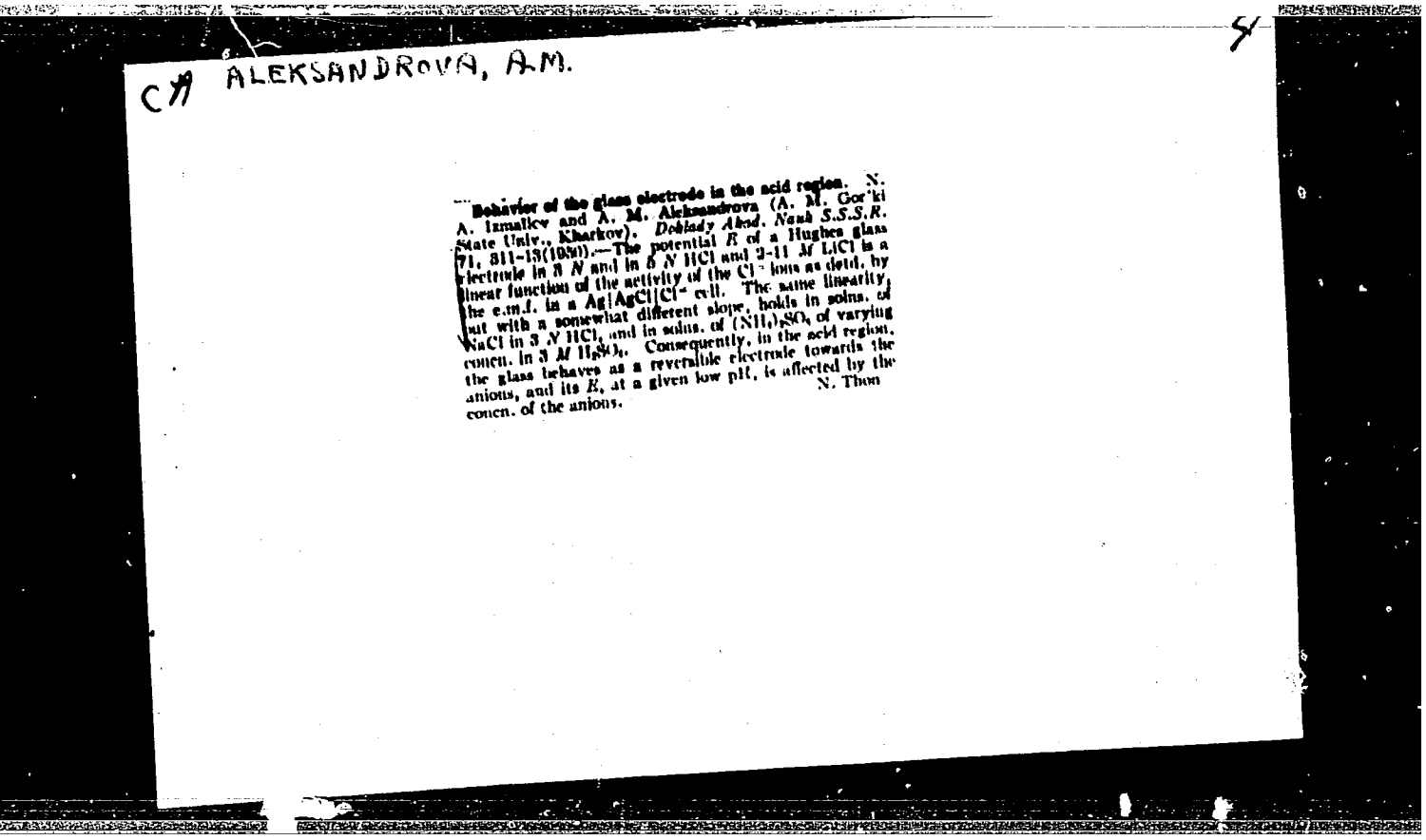

CA ALEKSANDROVA, A.M.

Behavior of the glass electrode in the acid region. N. A. Izmailov and A. M. Aleksandrova (A. M. Gor'ki State Univ., Kharkov). *Doklady Akad. Nauk S.S.S.R.* 71, 311-13(1950).—The potential E of a Hughes glass electrode in 3 N and in 5 N HCl and 2-11 M LiCl is a linear function of the activity of the Cl^- ions as detd. by the e.m.f. in a Ag|AgCl|Cl^- cell. The same linearity, but with a somewhat different slope, holds in solns. of NaCl in 3 N HCl, and in solns. of $(NH_4)_2SO_4$ of varying concn. in 3 M H_2SO_4. Consequently, in the acid region, the glass behaves as a reversible electrode towards the anions, and its E, at a given low pH, is affected by the concn. of the anions. N. Thon

APPROVED FOR RELEASE: 03/20/2001 CIA-RDP86-00513R000100910001-9"

"APPROVED FOR RELEASE: 03/20/2001 CIA-RDP86-00513R000100910001-9

CA ALEKSANDROVA, A.M. 4

Behavior of the glass electrode in nonaqueous media. V. Behavior of the glass electrode in glacial acetic acid. N. A. Izmailov and A. M. Aleksandrova (Kharkov State Univ.). *Zhur. Obshchei Khim.* (J. Gen. Chem., U.S.S.R.) 20, 2127-32(1950); cf. *C.A.* 45, 1430*d*.—Glass electrodes of Hughes (I) and of MacInnes-Dole (II) glass were calibrated at pH from 8.3 to − 1.4, detd. with the quinhydrone electrode (against H_2SO_4 0.1437 *M* in glacial AcOH) in the following solns. in glacial AcOH: $PhNMe_3$ 1 *M* (pH 8.3); AcONa 1.0 *N* (8.1); AcONa 0.25 *N* (7.6); AcONa 0.1 *N* (7.25); AcONa 0.01 *N* (6.7); AcONa 0.1 *N* + $HClO_4$ 0.1 *N* (3.3); $HClO_4$ 0.05 *N* (2.4); $HClO_4$ 0.1 *N* (2.1); $HClO_4$ 0.2 *N* (1.4); H_2SO_4 0.004 *M* + Ac_2O 10% (0.3); H_2SO_4 0.007 *M* + Ac_2O 10% (−0.2); $HClO_4$ 0.02 *N* + Ac_2O 10% (−1.4). In aq. soln., electrode I showed a break at pH −0.2, and II a deviation from linearity in the same region, but in glacial AcOH both electrodes showed a break at pH = 1.3. The potentials *E* of both electrodes varied linearly with the pH from 1.5 to 8.5, with the slopes $\Delta E/\Delta pH$ = 58.6 for (I) and 58.5 for (II), resp. Consequently, both electrodes were applicable for pH measurements in that range. Acid hysteresis was absent. Titration of $MeC_6H_4SO_3H$ with $PhNMe_3AcOH$ in glacial AcOH with electrode I gave rapid establishment of the potentials (2 min.) and a sharp peak of ΔE against the vol. of reagent added. N. Thon

APPROVED FOR RELEASE: 03/20/2001 CIA-RDP86-00513R000100910001-9"

"APPROVED FOR RELEASE: 03/20/2001 CIA-RDP86-00513R000100910001-9

CA ALEKSANDROVA, A.M.

4

The behavior of the glass electrode in nonaqueous solutions. V. In glacial acetic acid. N. A. Izmailov and A. M. Aleksandrova (Kharkov State Univ.). *J. Gen Chem. U.S.S.R.* 20, 2207-12(1950)(Engl. translation).—See *C.A.* 45, 4581*d*.
B. L. M.

APPROVED FOR RELEASE: 03/20/2001 CIA-RDP86-00513R000100910001-9"

"APPROVED FOR RELEASE: 03/20/2001 CIA-RDP86-00513R000100910001-9

ALEKSANDROVA, A.M.

Chemical Abst.
Vol. 48 No. 4
Feb. 25, 1954
Electrochemistry

Use of glass electrode in nonaqueous media. N. A. Izmailov and A. M. Aleksandrova. *Trudy Komissii Anal. Khim. Akad. Nauk S.S.S.R., Otdel. Khim. Nauk* 4(7): 149-62(1952); cf. *C.A.* 46, 4933*d*.—Over a wide pH interval, 2 electrodes were calibrated for mixts. of H_2O and O, 20, 71.9, 88.5, 93.5, and 100% EtOH by wt. Also 1 electrode was calibrated for H_2O, abs. EtOH, and abs. MeOH. The app. is described. The electrodes were sphere shaped, like those of Gaber, but one was made of the glass used by Hughes and the other of the glass used by MacInnes and Dole. The pH of the alc. solns. used was measured by H electrode and compared against a standard, 0.1*N* HCl in the corresponding soln. Thus, activity was expressed on the scale $pH_{solvent}$. Potentials of the electrode of Hughes glass were plotted against pH. All the curves were similar. In the middle pH range changes were proportional, but a min. occurred somewhere below pH 4 and a max. somewhere above pH 10. In the alk. range a cause of deviation was the differences of the exchange of H ion and Na ion between glass and soln. for different glass compns. For each electrode $pH_{max.}$ and K (const. of exchange of ions in glass) were detd. As alc. content increased, K increased because the activity was changed. As alc. content increased, the straight-line portion of the curve was shortened and this was the only limitation on the use of the glass electrode in nonaq. solns. In the middle pH range, pH did not depend on media. When the electrode of Hughes glass was used with H_2O, abs. EtOH, and abs. MeOH, the differences in curves were explained by differences of phase and diffusion potentials. When the electrode of M. and D. glass was used with H_2O and 88.5% EtOH, the curves were identical until pH 10, after which point alc. had a max. at a lower point than water had. 25 references. Eurilla Meyerle

4/15/54

APPROVED FOR RELEASE: 03/20/2001 CIA-RDP86-00513R000100910001-9"

"APPROVED FOR RELEASE: 03/20/2001 CIA-RDP86-00513R000100910001-9

Aleksandrova, A. M.

Behavior of the glass electrode in acids. N. A. Izmailov and A. M. Aleksandrova (A. M. Gor'kii State Univ., Kharkov). *Sbornik Statei Obshchei Khim., Akad. Nauk S.S.S.R.* 1, 173-8(1953); cf. *C.A.* 45, 4581d.—To det. the effect of anions on the calibration curve of the glass electrode in acids, measurements were made with a Hughes glass electrode in aq. solns. of HCl, H_2SO_4, and H_2PO_4. In all acids E vs. pH curves passed through a min., the position of which depended on the anion as well as on the concn. of the acid and the compn. of the glass of the electrode. In HCl at low pH beyond the min. the glass electrode acted reversibly towards the anion. In H_2SO_4 [illegible] pH (10-15N), in H_2PO_4 at 0.4 pH (25-30N), and in HCl at 0.2 pH (1-2N). E vs. log a (a = mean activity) in H_2SO_4, H_2PO_4, and HCl gave min. at log a 0.65-2 [illegible] E vs. log a_{H_2O} in HCl was a straight line [illegible] was a straight line almost vertical to the log a_{H_2O} axis down to the lowest E where it formed [illegible] there was a wide min. at a high [illegible] was concluded that the error of the glass electrode in acids could not be due to the change in the H_2O activity in the solns., but rather to the likelihood that the electrode in acids added an anion function to the known H^+ function. In acids the electrode beyond the min. acted reversibly towards the anion. I. Bencowitz

APPROVED FOR RELEASE: 03/20/2001 CIA-RDP86-00513R000100910001-9"

"APPROVED FOR RELEASE: 03/20/2001 CIA-RDP86-00513R000100910001-9

ALEKSANDROV, A.M.

0.059. The relation of E vs. pH did not change with time, but the abs. values of E shifted toward the pos. side and therefore daily calibration of W electrodes is recommended. In an atm. of H at pH 2–7 the E vs. pH for a W electrode was linear (slope coeff. 0.05); thus it can be used as a gas-H electrode. W electrodes for detg. the pH in nonbuffered solns. (natural waters) did not give satisfactory results. Sb electrodes were used satisfactorily for detg. the pH in the interval of 5–8 in buffered solns as well as in natural [illegible] results than did a glass electrode. M. Rosen

APPROVED FOR RELEASE: 03/20/2001 CIA-RDP86-00513R000100910001-9"

"APPROVED FOR RELEASE: 03/20/2001 CIA-RDP86-00513R000100910001-9

ALEKSANDROVA, A.I.

Protective casing-support for glass electrodes. Uch.zap. KHGU 71:249-251 '56. (MLRA 10:8)
(Electrodes, Glass)

APPROVED FOR RELEASE: 03/20/2001 CIA-RDP86-00513R000100910001-9"

"APPROVED FOR RELEASE: 03/20/2001 CIA-RDP86-00513R000100910001-9

ALEKSANDROVA, A. M. Cand Chem Sci -- (diss) "Study of the properties of glass electrodes in acid fields and in non-aqueous solutions." Khar'kov, 1957. 14 pp (Min of Higher Education UkSSR. Sci Res Inst of Chemistry Khar'kov Order of Labor Red Banner State Univ im A. M. Gor'kiy), 100 copies (KL, 3-58, 95)

APPROVED FOR RELEASE: 03/20/2001 CIA-RDP86-00513R000100910001-9"

"APPROVED FOR RELEASE: 03/20/2001 CIA-RDP86-00513R000100910001-9

KRUPSKIY, N.K.; ALEKSANDROVA, A.M.; GORBAN', Yu.V.

Curves of the potentiometric titration of soil suspensions in anhydrous solvents. Pochvovedenie no. 5:106-110 My '61. (MIRA 14:5)

1. Ukrainskiy nauchno-issledovatel'skiy institut pochvovedeniya.
(Soils—Analysis) (Soil acidity)

APPROVED FOR RELEASE: 03/20/2001 CIA-RDP86-00513R000100910001-9"

"APPROVED FOR RELEASE: 03/20/2001 CIA-RDP86-00513R000100910001-9

KRUPSKIY, N.K.; ALEKSANDROVA, A.M.; KHIZHNYAK, A.I.

Determination of available aluminum in soils. Pochvovedenie no.10:93-96 O '61. (MIRA 14:9)

1. Ukrainskiy nauchno-issledovatel'skiy institut pochvovedeniya imeni A.N. Sokolovskogo.
(Soils--Aluminum content)

APPROVED FOR RELEASE: 03/20/2001 CIA-RDP86-00513R000100910001-9"

"APPROVED FOR RELEASE: 03/20/2001 CIA-RDP86-00513R000100910001-9

S/081/62/000/017/033/102
B162/B 101

AUTHORS: Krupskiy, N. K., Aleksandrova, A. M., Stetsenko, M. V.

TITLE: Detection of chloride ion in muddy and colored ground extracts

PERIODICAL: Referativnyy zhurnal. Khimiya, no. 17, 1962, 132, abstract 17D86 (Pochvovedeniye, no. 2, 1962, 109 - 113 [summary in Eng])

TEXT: In order to determine Cl^- in muddy and colored aqueous ground extracts, the methods applied are potentiometric titration of a solution of the sample (0.5 ml 2N H_2SO_4 per 10 ml of sample solution) acidified with 0.002N $AgNO_3$ solution using an indicating silver chloride electrode (Pt-wire, covered with a mixed paste of Ag_2O and AgCl (7:1) and calcined at 450°C); and visual mercurimetric titration with diphenyl carbazone as indicator in the presence of benzene. To 10 ml of the sample solution, 10 ml of water and then a few drops of 1% solution of diphenyl carbazone are added, neutralized with a 0.2N HNO_3 solution (till yellow color), 5 ml of benzene is added and the mixture titrated with a 0.01N $Hg(NO_3)_2$

Card 1/2

APPROVED FOR RELEASE: 03/20/2001 CIA-RDP86-00513R000100910001-9"

"APPROVED FOR RELEASE: 03/20/2001 CIA-RDP86-00513R000100910001-9

KRUPSKIY, N.K.; ALEKSANDROVA, A.M.; GUBAREVA, D.N.

Determining the pH value in soils of the Ukrainian S.S.R.
Pochvovedenie no.4:70-78 Ap '62. (MIRA 15:4)

1. Ukrainskiy nauchno-issledovatel'skiy institut pochvovedeniya imeni A.N.Sokolovskogo.
(Ukraine--Soil acidity)

APPROVED FOR RELEASE: 03/20/2001 CIA-RDP86-00513R000100910001-9"

"APPROVED FOR RELEASE: 03/20/2001 CIA-RDP86-00513R000100910001-9

ALEKSANDROVA A.N.

ГЕРМАНИЯ И НЕКОТОРЫЕ РЕДКИЕ
И РАССЕЯННЫЕ ЭЛЕМЕНТЫ В УГЛЕ

М. А. Мокровский, А. Н. Александрова, К. Ю. Волков,
С. А. Гордон, Л. Н. Петровская
(Московский [illegible])

VIII Mendeleyev Congress for General and Applied Chemistry in
Section of Chemistry and Chemical Technology of Fuels,
publ. by Acad. Sci. USSR, Moscow 1959

abstracts of reports scheduled to be presented at above mentioned congress,
Moscow, 13 March 1959.

APPROVED FOR RELEASE: 03/20/2001 CIA-RDP86-00513R000100910001-9"

"APPROVED FOR RELEASE: 03/20/2001 CIA-RDP86-00513R000100910001-9

ALEKSANDROVA, A.N., assistent

Rapid method of quantitative chemical determination of germanium in coal ash. Nauch. trudy MGI no.27:65-69 '59.
(Coal--Analysis)
(Germanium--Ananlysis)

APPROVED FOR RELEASE: 03/20/2001 CIA-RDP86-00513R000100910001-9"

"APPROVED FOR RELEASE: 03/20/2001 CIA-RDP86-00513R000100910001-9

GORDON, S.A., starshiy nauchnyy sotrudnik; ALEKSANDROVA, A.N., assistent

Germanium determination in coals and their products. Nauch. trudy MGI no.27:71-74 '59. (MIRA 14:6)
(Coal--Analysis) (Germanium--Analysis)

APPROVED FOR RELEASE: 03/20/2001 CIA-RDP86-00513R000100910001-9"

"APPROVED FOR RELEASE: 03/20/2001 CIA-RDP86-00513R000100910001-9

ALEKSANDROVA, A.N., assistent

Effect of the rate of heating on the formation of 2nd type coal oxygen compounds during the low temperature oxidation of coals and products of their preparation. Nauch. trudy MGI no.27:115-122 '59. (MIRA 14:6)
(Coal preparation) (Oxydation)

APPROVED FOR RELEASE: 03/20/2001 CIA-RDP86-00513R000100910001-9"

"APPROVED FOR RELEASE: 03/20/2001 CIA-RDP86-00513R000100910001-9

ALEKSANDROVA, A.N., assistent

Study of some gaseous products of the thermal decomposition of coals using a triethanolamine aqueous solution. Nauch. trudy MGI no.27:123-128 '59. (MIRA 14:6)
(Coal--Analysis) (Ethanol)

APPROVED FOR RELEASE: 03/20/2001 CIA-RDP86-00513R000100910001-9"

"APPROVED FOR RELEASE: 03/20/2001 CIA-RDP86-00513R000100910001-9

5(2)

AUTHORS: Menkovskiy, M. A., Aleksandrova, A. N. SOV/32-25-2-17/78

TITLE: An Accelerated Method for the Determination of Germanium in the Ashes of Coal Minerals (Uskorennyy metod opredeleniya germaniya v zole iskopayemykh ugley)

PERIODICAL: Zavodskaya Laboratoriya, 1959, Vol 25, Nr 2, p 161 (USSR)

ABSTRACT: In the method described the coal sample is fused by heating in phosphoric acid and treated with hydrochloric acid; then the germanium chloride which has formed is distilled off and the germanium is determined colorimetrically with phenol fluorone. In comparison with the analogous analysis of ores by Strickland (Ref 1) twice as much phosphoric acid and no nitric acid is used in the present case. Coal samples (brown coal, types D, G, PZh, K, and PS) were determined by the method described and at the same time by a method in which the decomposition was performed in a mixture of hydrofluoric acid and sulfuric acid. A comparison (Table) of the results showed a remarkable agreement. In the presence of larger quantities of chlorides (more than 10%) losses of germanium may occur in the fusion process, as was shown by I. P. Alimarin and B. N. Ivanov-Emin (Ref 2) in the case of the hydrofluoric acid - sulfuric acid mixture. Duration of analysis by the method described:

Card 1/2

APPROVED FOR RELEASE: 03/20/2001 CIA-RDP86-00513R000100910001-9"

"APPROVED FOR RELEASE: 03/20/2001 CIA-RDP86-00513R000100910001-9

An Accelerated Method for the Determination of Germanium in the Ashes of Coal Minerals

SOV/32-25-2-17/78

1.5 hours. There are 1 table and 3 references, 2 of which are Soviet.

ASSOCIATION: Moskovskiy gornyy institut im. I. V. Stalina (Moscow Mining Institute imeni I. V. Stalin)

Card 2/2

APPROVED FOR RELEASE: 03/20/2001 CIA-RDP86-00513R000100910001-9"

"APPROVED FOR RELEASE: 03/20/2001 CIA-RDP86-00513R000100910001-9

MENKOVSKIY, M.A.; ALEKSANDROVA, A.N.

Using the acid demineralization method under reducing conditions for determining the characteristics of germanium compounds in coals. Dokl. AN SSSR 146 no.4:868-870 O '62. (MIRA 15:11)

1. Moskovskiy gornyy institut. Predstavleno akademikom S.I. Vol'fkovichem.

(Germanium compounds)
(Coal) (Pyrites)

APPROVED FOR RELEASE: 03/20/2001 CIA-RDP86-00513R000100910001-9"

"APPROVED FOR RELEASE: 03/20/2001 CIA-RDP86-00513R000100910001-9

L 15668-63 EWP(q)/EWT(m)/BDS AFFTC JD

ACCESSION NR: AP3004230 S/0032/63/029/007/0797/0799

AUTHORS: Monkovskiy, M. A.; Aleksandrova, A. N. 53 52

TITLE: Selection of coal ashing conditions for germanium determination

SOURCE: Zavodskaya laboratoriya, v. 29, no. 7, 1963, 797-799

TOPIC TAGS: germanium, germanium determination, ashing, coal ashing, ashing temperature, heating rate, ash content, Ge

ABSTRACT: The behavior of germanium during the process of ashing of various coal samples was investigated in relation to the rate of temperature increase, the amount of mineral admixtures, the total sulfur content of the coal, and the ashing temperature. Five-gram samples of coal were placed in a furnace, the temperature raised at rates of 3.5 and 20C per minute until a final temperature of 550C was reached, at which the ashing was continued until completed. The ash was analyzed for germanium, and it was found that in a brown coal sample with 13.41% ash the loss of germanium at a 3.5C-increase rate amounted to 2.1% of its original content, while at an increase rate of 20C per minute the germanium loss amounted to 10.0%. On the other hand, a furnace-type bituminous coal with a 4.46% ash content lost (under identical ashing conditions) 2.7% and 6.7% respectively of the original germanium content. In

Card 1/2

APPROVED FOR RELEASE: 03/20/2001 CIA-RDP86-00513R000100910001-9"

"APPROVED FOR RELEASE: 03/20/2001 CIA-RDP86-00513R000100910001-9

L 15668-63

ACCESSION NR: AP3004230

order to check the effect of ash on the loss of germanium during the ashing process, each sample was separated into two fractions by difference in specific gravity, the one floating on top of a nonspecified fluid, the other settling. The ash content of the floating fractions of the same brown and bituminous coal samples amounted to 2.54% and 1.35% respectively, as against 26.17% and 38.81% in the settling fraction. After ashing at the 3.5C-rate, the losses of germanium amounted to 0.4% and 8.4% in the floating fractions, as against 2.5% and 0.0 in the settling fractions, thus placing emphasis on the kind of coal being ashed. The recommended procedure for the ashing of coal samples for germanium determination consists in a staggered increase of temperature at a rate of 3.5C per minute, with a maximum of 700C-800C, and duration of 3.5-4 hours. Orig. art. has: 2 tables.

ASSOCIATION: Moskovskiy institut radioelectroniki i gornoy electromekhaniki (Moscow Institute of Radioelectronics and Mining Electromechanics)

SUBMITTED: 00 DATE ACQ: 02Aug63 ENCL: 00

SUB CODE: CH NO REF SOV: 002 OTHER: 006

Card 2/2

APPROVED FOR RELEASE: 03/20/2001 CIA-RDP86-00513R000100910001-9"

"APPROVED FOR RELEASE: 03/20/2001 CIA-RDP86-00513R000100910001-9

ALEKSANDROVA, Ariadna Nikolayevna, kand. khim. nauk

[Preparation, properties, and applications of synthetic high polymers] Poluchenie, svoistva i oblasti primeneniia sinteticheskikh vysokopolimerov. Moskva, Mosk. in-t radioelektroniki i gornoi elektromekhaniki, 1962. 34 p. (MIRA 17:4)

APPROVED FOR RELEASE: 03/20/2001 CIA-RDP86-00513R000100910001-9"

"APPROVED FOR RELEASE: 03/20/2001 CIA-RDP86-00513R000100910001-9

ALEKSANDROVA, A. P.

Aleksandrova, A. P. - "The characteristics of psychosis caused by the combined action of two poisons on the organism," Trudy Tsentr. in-ta psikhiatrii, Vol. IV, 1949, p. 251-58

SO: U-4934, 29 Oct 53, (Letop'i 'Zhurnal 'nykh Statey No. 16, 1949).

APPROVED FOR RELEASE: 03/20/2001 CIA-RDP86-00513R000100910001-9"

"APPROVED FOR RELEASE: 03/20/2001 CIA-RDP86-00513R000100910001-9

ALEKSANDROVA, A.P.

RAVKIN, I.G.; ALEKSANDROVA, A.P.; LANDO, L.I.; RODIN, I.I.

Reactions in chronic schizophrenia to polyvalent antiencephalitic serum used for therapeutic purposes [with summary in French]. Zhur. nevr. i psikh. 57 no.1:87-94 '57. (MLRA 10:3)

1. Nauchno-issledovatel'skiy institut psikhiatrii (dir. - prof. V.M. Banshchikov) Ministerstva zdravookhraneniya RSFSR i Institut virusologii AMN SSSR, Moskva.

(SCHIZOPHRENIA, ther.
antiencephalitis serum, causing reaction, EEG)
(IMMUNE SERUMS, ther. use
antiencephalitis serum in schizophrenia, causing reaction, EEG)
(ELECTROENCEPHALOGRAPHY, in various dis.
antiencephalitis serum ther. in schizophrenia causing reaction)

APPROVED FOR RELEASE: 03/20/2001 CIA-RDP86-00513R000100910001-9"

"APPROVED FOR RELEASE: 03/20/2001 CIA-RDP86-00513R000100910001-9

ALEKSANDROVA, A.P.; LUK'YANOV, V.S.; BANSHCHIKOV, V.M., prof., red.

[Problems in the clinical aspects, prevention, and treatment of hypotension] Voprosy kliniki, profilaktiki i lecheniia gipotonicheskoi bolezni. Pod red. V.M.Banshchikova, Moskva, zdravookhraneniia RSFSR, 1960. 83 p. (MIRA 15:1)
(HYPOTENSION)

APPROVED FOR RELEASE: 03/20/2001 CIA-RDP86-00513R000100910001-9"

"APPROVED FOR RELEASE: 03/20/2001 CIA-RDP86-00513R000100910001-9

ALEKSANDROVA, A.P., starshiy nauchnyy sotrudnik

Characteristics of the clinical aspects and course of hypotension with mental disorders. Trudy Gos.nauch-issl.inst.psikh. 25:407-421 '61. (MIRA 15:12)

1. Klinika sosudistykh psikhozov (zav. - prof. V.M.Banshchikov) Gosudarstvennogo nauchno-issledovatel'skogo instituta psikhiatrii Ministerstva zdravookhraneniya RSFSR.
(MENTAL ILLNESS) (HYPOTENSION)

APPROVED FOR RELEASE: 03/20/2001 CIA-RDP86-00513R000100910001-9"

"APPROVED FOR RELEASE: 03/20/2001 CIA-RDP86-00513R000100910001-9

BANSHCHIKOV, V.M., prof.; ALEKSANDROVA, A.P., kand.med.nauk; RYZHIKOV, G.V.

Effect of arterial hypotension on the clinical picture of cerebral atherosclerosis; a clinical observation. Trudy 1-go MMI 21:76-84'63. (MIRA 16:9)

1. Kafedra psikhiatrii (zav. - prof. V.M.Banshchikov) 1-go Moskovskogo ordena Lenina meditsinskogo instituta imeni I.M. Sechenova.

(HYPOTENSION) (CEREBRAL ARTERIOSCLEROSIS)

APPROVED FOR RELEASE: 03/20/2001 CIA-RDP86-00513R000100910001-9"

"APPROVED FOR RELEASE: 03/20/2001 CIA-RDP86-00513R000100910001-9

ALEKSANDROVA, A.P., kand. med. nauk; RYZHIKOV, G.V.

Results of hemophyrin treatment of hypotension with neuropsychic disorders. Trudy 1-go MMI 25:220-228 '63. (MIRA 17:12)

1. Kafedra psikhiatrii 1-go Moskovskogo ordena Lenina meditsinskogo instituta imeni I.M.Sechenova (zav. kafedroy V.M.Banshchikov).

APPROVED FOR RELEASE: 03/20/2001 CIA-RDP86-00513R000100910001-9"

"APPROVED FOR RELEASE: 03/20/2001 CIA-RDP86-00513R000100910001-9

ALEKSANDROVA, A.P.; RYZHIKOV, G.V.

Characteristics of the clinical picture of schizophrenia with a background of arterial hypotension; a clinical observation. Trudy 1-go MMI 34:192-197 '64. (MIRA 18:11)

1. Kafedra psikhiatrii (zav. - zasluzhennyy deyatel' nauki prof. V.M. Banshchikov) 1-go Moskovskogo ordena Lenina meditsinskogo instituta imeni Sechenova.

APPROVED FOR RELEASE: 03/20/2001 CIA-RDP86-00513R000100910001-9"

"APPROVED FOR RELEASE: 03/20/2001 CIA-RDP86-00513R000100910001-9

ALEKSANDROVA, A. S.

1166. Spectrum excitation by a [illegible] [illegible] analysis of [illegible] bronzes [illegible] and S. P. Davydov. [illegible] *Mashinostroenie*, 1955, (4), 51-53; *Ref. Zhur., Khim.*, 1956, Abstr. No. 25,982.—The analysis of [illegible] bronzes for Zn, Pb, Sn, Ni and Fe is carried out by using a low-tension generator of powerful impulse discharges (illustrated). The sample is cast in a metal mould and cut in two pieces. Before the analysis, the surface of the block is covered with a thin layer of an insulating [illegible]

[illegible] is 1·0 mm. The lines used for the analysis are—Sn 2840·0 and Cu 2824·4; Pb [illegible] [illegible] 2824·4; Fe 2755·7 and [illegible]

[illegible] spectrum. During work on the [illegible] [illegible] standards the mean square error was [illegible] [illegible] and Zn [illegible]

APPROVED FOR RELEASE: 03/20/2001 CIA-RDP86-00513R000100910001-9"

"APPROVED FOR RELEASE: 03/20/2001 CIA-RDP86-00513R000100910001-9

Aleksandrova, A.S.

24(7) PHASE I BOOK EXPLOITATION SOV/1700

Lvov. Universitet

Materialy X Vsesoyuznogo soveshchaniya po spektroskopii, 1956. t. II: Atomnaya spektroskopiya (Materials of the 10th All-Union Conference on Spectroscopy, 1956. Vol 2: Atomic Spectroscopy) /Lvov/ Izd-vo L'vovskogo univ., 1958. 568 p. (Series: Its: Fizicheskiy sbornik, vyp.4(9)) 3,000 copies printed.

Additional Sponsoring Agency: Akademiya nauk SSSR. Komissiya po spektroskopii.

Editorial Board: G.S. Landsberg, Academician, (Resp. Ed.); B.S. Neporent, Doctor of Physical and Mathematical Sciences; I.L. Fabelinskiy, Doctor of Physical and Mathematical Sciences; V.A. Fabrikant, Doctor of Physical and Mathematical Sciences; V.G. Koritskiy, Candidate of Technical Sciences; S.M. Rayskiy, Candidate of Physical and Technical Sciences; L.K. Klimovskaya, Candidate of Physical and Mathematical Sciences; V.S. Miliyanchuk (Deceased), Doctor of Physical and Mathematical Sciences; A.Ye. Glauberman, Doctor of Physical and Mathematical Sciences; Ed.: S.L. Gazer; Tech. Ed.: T.V. Saranyuk.

PURPOSE: This book is intended for scientists and researchers in the field of spectroscopy, as well as for technical personnel using spectrum analysis in various industries.

COVERAGE: This volume contains 177 scientific and technical studies of atomic spectrography presented at the 10th All-Union Conference on Spectroscopy in 1956. The studies were carried out by members of scientific and technical institutes and include extensive bibliographies of Soviet and other sources. The studies cover many phases of spectroscopy: spectra of rare earths, electromagnetic radiation, physicochemical methods for controlling uranium production, physics and technology of gas discharge, optics and spectroscopy, abnormal dispersion in metal vapors, spectroscopy and the combustion theory, spectrum analysis of ores and minerals, photographic methods for quantitative spectrum analysis of metals and alloys, spectral determination of the hydrogen content of metals by means of isotopes, tables, and atlases of spectral lines, spark spectrographic analysis, statistical study of variation in the parameters of calibration curves, determination of traces of metals, spectrum analysis in metallurgy, thermochemistry in metallurgy, and principles and practice of spectrochemical analysis.

Card 2/31

Materials of the 10th All-Union Conference (Cont.) SOV/1700

Sventitskiy, N.S., K.A. Sukhenko, O.B. Fal'kova, P.P. Galonov, K.I. Taganov, and M.S. Alpatov. Spectrum Analysis of Titanium, Molybdenum, and Their Alloys for Nitrogen, Hydrogen, and Oxygen 225

Aleksandrova, A.S., Ye.I. Vorontsov, and S.S. Rimlyand. Work With Pulse Generators 231

Kudelya, Ye.S. Some Aspects of the Entry of Sample Components Into the Discharge With Spark Excitation of Spectra 233

Kudelya, Ye.S. Nature of the Structure Effect in Spectrum Analysis of Metal Alloys 242

Grikit, I.A. Mechanism of the Entry of the Sample Component Into the Analytic Gap and Methods for Eliminating Alloy Structure Effect on the Results of Spectrum Analysis 244

Card 15/31

APPROVED FOR RELEASE: 03/20/2001 CIA-RDP86-00513R000100910001-9"

"APPROVED FOR RELEASE: 03/20/2001 CIA-RDP86-00513R000100910001-9

ALEKSANDROVA, A.S.; VORONTSOV, Ye.I.; RIMLYAND, S.S.

Using a pulse generator. Fiz.sbor. no.4:231-238 '58.
(MIRA 12:5)

(Electric discharges) (Spectrum analysis)

APPROVED FOR RELEASE: 03/20/2001 CIA-RDP86-00513R000100910001-9"

"APPROVED FOR RELEASE: 03/20/2001 CIA-RDP86-00513R000100910001-9

ALEKSANDROVA, Ariadna Timofeyevna; BRODSKIY, S.I.; SAZHIN, I.I.; SHCHIRENKO, G.N.; GOLUBEV, V.A., inzh., red.; FRIDKIN, L.M., tekhn. red.

[Technical equipment for the manufacture of electric vacuum devices] Tekhnologicheskoe oborudovanie elektrovakuumnogo proizvodstva. Moskva, Gosenergoizdat, 1962. 300 p. (MIRA 15:6)

(Electronic industries--Equipment and supplies)

APPROVED FOR RELEASE: 03/20/2001 CIA-RDP86-00513R000100910001-9"

"APPROVED FOR RELEASE: 03/20/2001 CIA-RDP86-00513R000100910001-9

AM4017342 BOOK EXPLOITATION S/

Aleksandrova, Ariadna Timofeyevna; Brodskiy, Solomon Isayakovich; Sazhin Ivan Ivanovich; Shchirenko, Georgiy Nikolayevich

Equipment for working high-melting metals in the manufacture of electron vacuum devices (Oborudovaniye dlya obrabotki tugoplavkikh metallov v electrovakuumnom proizvodstve), Moscow, Gosenergoizdat, 1963, 79 p., illus., biblio. 9,000 copies printed.

TOPIC TAGS: high-melting metal, electron vacuum device, machining, tungsten powder, molybdenum powder, wire, rolling, laminating, electron-beam melting

PURPOSE AND COVERAGE: This booklet describes the equipment for chemical and thermal treatmen and machining refractory metals used in the manufacture of electron vacuum devices. The book is intended as a text for the section of the course "Mechanical Equipment in the Manufacture of Electron Vacuum Devices" on equipment. It can also serve as a text for students in similar specialties and can be useful to engineers, technicians, and workers engaged in the production of refractory metals.

TABLE OF CONTENTS [abridged]:

Card 1/2

APPROVED FOR RELEASE: 03/20/2001 CIA-RDP86-00513R000100910001-9"

"APPROVED FOR RELEASE: 03/20/2001 CIA-RDP86-00513R000100910001-9

AM4017342

Foreword - - 3
Introduction - - 5
Ch. I. Equipment for obtaining metallic tungsten and molybdenum powders - - 6
Ch. II. Equipment for obtaining compact tungsten and molybdenum - - 13
Ch. III. Equipment for making tungsten and molybdenum wire - - 20
Ch. IV Equipment for rolling very thin strip and laminating wire - - 53
Ch. V. Equipment for obtaining especially pure refractory metals - - 73

SUB CODE: ML SUBMITTED: 10 Jul 63 NR REF SOV: 016

OTHER: 000 DATE ACQ: 13 Mar 64

Card 2/2

APPROVED FOR RELEASE: 03/20/2001 CIA-RDP86-00513R000100910001-9"

"APPROVED FOR RELEASE: 03/20/2001 CIA-RDP86-00513R000100910001-9

ALEKSANDROVA, A.V.

Biology of Scopolia tangutica Maxim. Bot. zhur. 45 no.11:1667-1672 N '60. (MIRA 13:11)

1. Botanicheskiy institut imeni V.L.Komarova Akademii nauk SSSR, Leningrad.
(Kostroma Province--Scopolia) (Alkaloids)

APPROVED FOR RELEASE: 03/20/2001 CIA-RDP86-00513R000100910001-9"

"APPROVED FOR RELEASE: 03/20/2001 CIA-RDP86-00513R000100910001-9

ALEKSANDROVA, A. V. Cand Med Sci

Dissertation: "Comparative Evaluation of Various X-Ray Methods for Examination of Lungs After Thoracoplastic Operation in the Cast of Tuberculosis."

21 June 49

Central Inst for the Advanced Training of Physicians

SO Vecheryaya Moskva
Sum 71

APPROVED FOR RELEASE: 03/20/2001 CIA-RDP86-00513R000100910001-9"