CENTRAL INTELLIGENCE AGENCY

[redacted]

S-E-C-R-E-T
NO FOREIGN DISSEM

COUNTRY	USSR	**REPORT**	[redacted]
SUBJECT	Soviet Manuals on [redacted] [redacted] Engine Instruments and Service of the TU-16 Aircraft	**DATE DISTR.**	20 December 1963
		NO. PAGES	2
		REFERENCES	[redacted]
DATE OF INFO.	[redacted]		
PLACE & DATE ACQ.			

50X1-HUM 50X1-HUM 50X1-HUM

THIS IS UNEVALUATED INFORMATION. SOURCE GRADINGS ARE DEFINITIVE. APPRAISAL OF CONTENT IS TENTATIVE.

[redacted]

[redacted] English-language Soviet manuals on the TU-16 aircraft (BADGER A) [redacted] [redacted] None of the manuals show a date or place of publication.

50X1-HUM

50X1-HUM

Attachment No.	Title
1	Fuel Consumption Control Units and TU-16 Aircraft Engine Instruments, 72 pages and 84 figures.
[redacted]	[redacted]
3	TU-16 Aircraft, Aircraft Service Manual, Book II, Navigation Equipment, Autopilot, Oxygen, Electrical, Photo, and Radio Equipment, 261 pages and 181 figures.
4	TU-16 Aircraft, Aircraft Service Manual, Book I, General Servicing of Aircraft, Care and Maintenance of Airframe, Emergency and Rescue Appliances, Aircraft Controls, Landing Gear and Hydraulic Systems, Power Plants, Altitude Equipment, and Packing and Shipment of Separate Aircraft Units, 304 pages and 4 insets.

50X1-HUM

50X1-HUM

[redacted]

[redacted]

S-E-C-R-E-T
NO FOREIGN DISSEM

GROUP 1
Excluded from automatic downgrading and declassification

STATE	DIA	ARMY	NAVY	AIR	NSA	XXXX NIC	OCR	SAIC
			[redacted]					

(Note: Field distribution indicated by "#".)

50X1-HUM

[redacted]

Distribution of Attachments:

[redacted]

50X1-HUM

OSI:	2 sets
ORR:	2 sets
Air:	2 sets
Air/FTD:	5 sets (1 set previously forwarded)
SAC:	1 set
Army:	1 set
Army/FSTC:	1 set
Navy:	2 sets
Navy/STIC:	2 sets
DIA:	3 sets
NSA:	6 sets

[redacted]

50X1-HUM

S-E-C-R-E-T
NO FOREIGN DISSEM

[redacted] 50X1-HUM

TU-16 AIRCRAFT

AIRCRAFT SERVICE MANUAL

Book I

General Servicing of Aircraft, Care and Maintenance of Airframe, Emergency and Rescue Appliances, Aircraft Controls, Landing Gear and Hydraulic Systems, Power Plants, and Altitude Equipment, Packing and Shipment of Separate Aircraft Units

GROUP 1
Excluded from automatic downgrading and declassification

[redacted]

50X1-HUM

Ty-16 AIRCRAFT SERVICE MANUAL

Book One

[redacted]

Ty-16 AIRCRAFT
SERVICE MANUAL

Book One

Ground Servicing of Aircraft. Care and Maintenance of Airframe, Emergency and Rescue Appliances, Aircraft Controls, Landing Gear and Hydraulic Systems, Power Plants, and Altitude Equipment. Packing and Shipment of Separate Aircraft Units.

[redacted]

The book contains 304 pages and 4 insets. Inset No.1 is inserted between pages 210 and 211, while insets Nos 2, 3, and 4 are between pages 228 and 229.

CONTENTS

Page

Chapter I

GROUND SERVICING OF AIRCRAFT

Chapter II

AIRCRAFT AIRFRAME CARE AND MAINTENANCE

[redacted]

50X1-HUM

Chapter III

EMERGENCY AND RESCUE APPLIANCES. CARE AND MAINTENANCE

Chapter IV

AIRCRAFT CONTROLS. CARE AND MAINTENANCE

Chapter V

LANDING GEAR AND HYDRAULIC SYSTEMS. CARE AND MAINTENANCE

[redacted]

50X1-HUM

Chapter VI

POWER PLANTS. CARE AND MAINTENANCE

Chapter VII

ALTITUDE EQUIPMENT. CARE AND MAINTENANCE

Chapter VIII

PACKING AND SHIPMENT OF SEPARATE AIRCRAFT UNITS

Chapter I

GROUND SERVICING OF AIRCRAFT

1. AIRCRAFT TOWING

The aircraft is towed with the aid of towing gear, with its nose or tail forward.

Caterpillar tractors are employed as towing vehicles. When pulling out the aircraft to the compass swinging platform, as well as in other cases not covered by the respective Operating Instructions, trucks carrying 1 to 1.5 t ballast (depending on the weight of the aircraft in question) may be employed for the purpose.

Towing Gear

Tow-bar (Fig.1) serves for coupling the aircraft to the tractor, when the aircraft is towed with the nose forward. The tow-bar is essentially a metal structure furnished with rubber shock absorber 4 safeguarding the aircraft against abrupt jerks during towing. The tow-bar is carried on adjustable bogey 5 fitted with two 300x125 mm tyres. Hinged to the tow-bar is swivel frame 7 designed for turning the aircraft nose wheel. The tow-bar is attached to assembly A on the nose strut, the swivel frame being secured to the extending ends of the nose wheel axles. The ends of the axles are gripped by split straps 16 provided with trunnions 15 fitting into the axle butt ends.

To prevent trunnions 15 from coming out of the half-axles when the front wheels are abruptly turned, the trunnions are held in place by strainer 14.

When the tow-bar is connected to aircraft assy A, hinge 12 and retainer 13 are provided.

Movable strap 10 with coupling bolt 11 is designed for raising the bogey tyres prior to towing the aircraft and for lowering them when transporting the tow-bar itself.

The working surfaces of rod 2 and guide 17 are protected against dirt by tarpaulin boot 3. Tractor pull at the aircraft nose strut is limited by shear pin 9. The tow-bar is connected to the towing vehicle through the medium of eye 1 with a bolt.

The nose wheel control gear serves for changing the direction of aircraft movement when towing it with the tail forward (Fig.2). The control gear consists of tubular welded frame 3, two split straps 7 with trunnions 8 for gripping the extending ends of the nose wheel axles, and eye 1 for towing the control gear with the aid of a tractor. For manual turning of the nose wheels the control gear is furnished with tubular hand grips 2. Two wheels 6 are provided to ensure ease of transportation. With the control gear in the working position, trunnions 8 are

[redacted]

connected to the extending ends of the nose wheel axles, and the control gear is drawn to assy A (See Fig.1) on the nose strut through special shock absorber 4. The shock absorber facilitates maintaining the control gear at a distance of about 1000 cm above the ground.

The towing cable is used to connect the towing vehicle to the aircraft, when towing the latter with the tail forward (See Fig.2).

When in the working position, the towing cable, as measured from the landing gear strut to the tractor towing yoke, is 24 m. long. Cable diameter is 19.5 mm.

Both branches of the cable are connected to the rigging units of the main landing gear struts by means of locking rigging brackets 9. Connection of the cable branches to the towing vehicle is accomplished through the use of towing yoke 11 and a load-carrying bolt. Each of the cable branches is fitted with uniformly spaced duralumin bosses 12 safeguarding the cable against damage, and clasps 10 serving to keep the cable suspended during aircraft towing.

General Instructions on Aircraft Towing

1. With fuel fully drained from the tanks, it is necessary that the nose portion of the aircraft be loaded with 400 to 450 kg ballast, to prevent the tail portion from dropping down.

The aircraft may be towed without any ballast in the nose portion, provided not less than 3000 lit. or 1000 lit. of fuel are contained in tanks No.6 or tank No.2 respectively.

2. Aircraft towing with the nose forward is performed with the aid of the tow-bar, whereas towing with the tail forward is accomplished by the use of the towing cable and the nose wheel control gear.

CAUTION: It is prohibited to move the aircraft with the tail forward by pushing the tow-bar, exclusive of the cases when the aircraft is positioned on the maintenance area or is moved to the hangar.

3. When towed by the nose strut along a concrete road, the aircraft may be loaded to any weight, whereas its weight should not exceed 65 t, if towed on hard rolled soil.

4. With the aircraft being towed, a pilot or a maintenance man should occupy the left pilot seat in order to apply brakes in the case of necessity.

5. The person in charge should be in front of the towing vehicle.

6. The direction of movement at starting should coincide with the direction of the nose wheels.

7. The aircraft should be towed smoothly, without abrupt jerks or stops. The aircraft brakes must not be applied during towing, except when the towing gear is ruptured, or when there is a danger of the aircraft hitting the towing vehicle due to inertia motion.

8. It is prohibited to pull the aircraft wheels out of pits or depressions by the nose strut.

9. The speed of aircraft towing on a straightway is not restricted and depends solely on the power of the towing vehicle, provided the way is free from any obstacles. However, if the aircraft is to be turned or the towing vehicle is to be abruptly braked or stopped during towing, the speed of towing, as well as braking time and distance should be as specified in Table 1.

Table 1

Maximum Speed, Braking Time and Distance Values to Be Adhered to During Aircraft Towing

Aircraft load	Maximum towing speed, km/hr	Towing vehicle braking time (until stopped), sec.	Braking distance, m.
Maximum	10	5	9
Normal	10	4.5	8
No load	10	4	7

10. Whenever the tow-bar shock absorber is forced to its furthermost positions due to an abrupt jerk or brake application, causing the shear pin to take up the impact, it is necessary to extract the shear pin from the tow-bar head and inspect it. The pin should be replaced by a new one if shearing is detected.

CAUTION: It is strictly prohibited to install a shear pin of a diameter larger than specified.

11. In the event both wheels of the main landing gear get into a pit, the aircraft should be pulled out by applying traction force to both of the main struts in turn. If only one of the main struts sinks, the aircraft should be pulled out by this strut.

12. In case the aircraft skids off the runway onto muddy ground while performing the landing run, it should be towed only after scraping off mud down to hard ground in order to provide tracks for the wheels.

13. Should it be necessary to slightly turn the aircraft, traction force must be applied to the outward strut in the direction of turn.

14. It should be always borne in mind that while turning the aircraft, both the nose and main landing gear struts have to withstand stresses; therefore, turning should be accomplished smoothly.

Preparing for Aircraft Towing

1. Make sure the external power sources are disconnected from the aircraft; see that the aircraft storage battery is cut off and the grounding wire with weight is removed into a special container within the nose strut compartment.

2. Make certain the nose wheel control button is depressed and locked by means of the safety thumb-piece.

3. Check pressure in the brake hydraulic system, which should be within 130 - 150 kg/sq.cm.

4. See that the aircraft is properly grounded. The grounding brushes on the main landing gear struts should touch the ground surface.

5. Check the towing gear for proper condition.

6. Make sure the aircraft parking brakes are released.

Towing Aircraft with Nose Forward

Aircraft towing with the nose forward (See Fig.1) is accomplished by the use of a tow-bar.

To attach the tow-bar to the aircraft:

1. Detach the tow-bar from the tractor and move it to the nose strut.

2. Remove strainer 14, release straps 16, extract trunnions 15 and fit them into the landing gear nose wheel axles.

[redacted]

50X1-HUM

3. Disconnect strap 6, and attach the swivel frame to trunnions 15.

4. Connect the tow-bar to the rigging fitting of the nose strut by means of hinge 12 and retainer 13.

5. Brace trunnions 15 with the help of the straps and install strainer 14.

<u>Note</u>: Exercise care when connecting the tow-bar to the rigging fitting of the nose strut to avoid damage to the hydraulic system piping.

6. Couple the tow-bar to the tractor for which purpose release strap 10 and shift it along the tow-bar so as to allow the tyres of the adjustable bogey to be raised to a height of 60 cm or more (depending on the weight of the aircraft) above the surface of the ground or concrete runway.

7. Secure strap 10 on the tow-bar.

8. Take the chocks from under the landing gear wheels, take away the ladders and other ground equipment blocking the aircraft way.

9. Aircraft towing with the nose forward should be supervised by the following personnel: a technician walking in front of the tractor and responsible for the whole towing procedure, two maintenance men at the wing tips and one at the tail unit, responsible for the safety of movement, and one maintenance man occupying the left pilot seat whose function is to apply brakes in case of necessity.

<u>Note</u>: Command <u>STOP</u> given by any of the supervising personnel should be carried out immediately.

10. After the aircraft has been brought to its destination, it is necessary either to place chocks under the landing gear wheels, or to apply parking brakes after the wheels have cooled down to the temperature of the surrounding air.

To disconnect the tow-bar from the aircraft:

(a) Slacken strap 10 and lower bogey 8 until its tyres touch the ground. Then fasten strap 10 on the tow-bar.

(b) Disconnect the tow-bar from the towing vehicle.

(c) Detach the tow-bar from the nose strut rigging unit, for which purpose extract retainer 13.

(d) Release strainer 14, turn out the coupling bolts on straps 16, and remove them from trunnions 15. Move the tow-bar manually away from the aircraft; fasten the swivel frame on the tow-bar by means of strap 6.

(e) Remove trunnions 15 from the front wheel axles and fasten them on the tow-bar.

(f) Fit strainer 14 into the tow-bar trunnions and fasten therein.

(g) Attach the tow-bar to the tractor.

<u>Towing Aircraft with Tail Forward</u>

Aircraft towing with the tail forward (See Fig.2) is accomplished with the aid of a cable, the movement being controlled by the nose wheel control gear.

To prevent the cable from getting under the wheels, both of its branches should be kept suspended making use of the hand grips. Care should be exercised when towing the aircraft, as abrupt straining of the cable may cause damage to the maintenance personnel.

To connect the cable and the control gear to the aircraft:

1. Pull the cable to the aircraft, connect its rigging brackets 9 to the rigging fittings of the main struts; secure the towing yoke to the tractor.

2. Attach the control gear to the nose strut; lift the free end of the gear by the hand grips, and fit shock absorber bracket 9 into the nose strut fork.

3. Take the chocks from under the wheels, take away the ladders and other ground equipment blocking the aircraft way.

4. After the aircraft is towed to and positioned on the designated area, it is necessary either to place chocks under the landing gear wheels or to apply parking brakes after the wheels have cooled down to the temperature of the surrounding air. After that it is necessary to detach the cable and the control gear from the aircraft.

When the aircraft is towed with the tail forward the procedure should be supervised by the following personnel: a technician walking in front of the tractor and responsible for the whole operation, two maintenance men at the wing tips responsible for the safety of movement, three men at the control gear, two men at the cable, and one <u>on</u> the seat of the left pilot, his duty being to apply brakes, when required.

<u>Directions on Towing Gear Operation and Maintenance</u>

When operating the towing gear:

1. See that:

(a) braces 5 (See Fig.1) are tight;

(b) all hinge and detachable joints are treated with lubricant ЦИАТИМ-201 or HK-30 and are free of any play;

(c) a pressure of 3.5 kg/sq.cm. is maintained in the tow-bar tyres;

(d) the operating surface of the rod and the surface of its guide are always lubricated, and the operating surface of the rod guide is always protected with a cover.

2. Do not allow guide 17 (See Fig.1) to be worn to a degree when a clearance of over 1 mm is formed between its end nut and rod 2.

3. Once in two months treat the wheel bearings with lubricant HK-30 or HK-50.

4. Move the tow-bar on its own wheels with the swivel frame lifted and held against the tow-bar tube by the straps.

5. Treat the trunnions fitted into the nose strut wheel axles with graphite lubricant.

6. Keep the towing cable in a closed room or under a shed; treat it with lubricant ЦИАТИМ-201. Inspect the towing cable for defects at regular intervals; replace the cable if any of the strands are found to be ruptured.

7. Once in every three months treat the nose wheel control gear axles and forks with lubricant HK-30 or HK-50.

8. When towing the aircraft, use the control gear with care to avoid abrupt turning of the landing gear nose wheels.

9. Do not move the aircraft or turn the wheels by means of the control gear after the aircraft has been placed in position on the parking area.

10. Keep the tow-bar in a closed room or under a shed.

2. AIRCRAFT COVERS
(Fig.3)

Covers safeguard the aircraft and its equipment against dirt and sun rays. Individual covers are fitted on the following units and equipment:

1. Fuselage compartment Ф-1 (up to frame No.12) and pressurised nose cabin.
2. Fuselage compartment Ф-3 (between frames Nos 12 and 22).
3. Fuselage compartment Ф-4 and engines (between frames Nos 22 and 36, and between frames Nos 36 and 50).
4. Aft portion of the fuselage (between frames Nos 50 and 64).
5. Pressurized rear cabin.
6. First detachable wing sections.
7. Second detachable wing sections.
8. Horizontal stabilizer.

[redacted]

50X1-HUM

9. Main strut locks.
10. Main strut wheels.
11. Nose strut lock.
12. Nose wheels.
13. Pitot tube.
14. Barrels of movable cannons.
15. Barrel of stationary gun mount.
16. Engine nacelle air discharge shutters.

Ports for air supply into the fuel tank vent system, for engine breathing, and for ventilation of the pressurized rear cabin at low altitudes are closed on the ground by special plugs furnished with red warning flags.

Note: When closing the vent of the rear pressurized cabin, attach the plug cord to the tail skid (at the port side). Never pass the cord over the folded-dipole antenna of communication station РСБ-70М to avoid damage to the surface layer of the antenna not protected with the casing

The plugs for the above openings are tapered wads made of cotton lined with tarpaulin. Attached to each of the plugs is a strap with a red flag. The strap allows quick removal of the plug without climbing up to the place of its installation in the aircraft. The red flag on the strap warns the maintenance personnel that the plugs must be removed prior to starting the engine and preparing the aircraft for flight. Covers for Pitot tubes are made of tarpaulin and red warning flags are attached to them. Blanking covers for the air intake ducts and jet nozzles are made of duralumin and painted red. The air intake duct blanking cover conforms to the profile of the duct and has a rubber gasket along its contour to ensure a tight fit into the duct. For convenience's sake the blanking cover is furnished with two handles.

The jet nozzle blanking cover is circular in shape; it is provided with two handles and a cone fastened in the centre by means of rivets. The blanking covers should not be used for collecting fuel and oil sediment or for other non-specified purposes. The blanking covers should be kept clean; prior to be fitted into the engine the blanking covers must be wiped with dry clean cotton waste or cloth.

The turbo-starter blanking cover, when inserted in its proper place, is fitted with a duralumin casing. The blanking cover is painted red and has a handle for ease of installation and removal. It is secured to the engine nacelle by two bolts; its casing safeguards the starter exhaust pipe against foreign objects, and therefore must be fitted onto the turbo-starter blanking cover.

The cover for the engine cowling is essentially a duralumin shell lined with tarpaulin. The cover prevents dust, moisture, and foreign objects from getting under the engine cowling.

Aircraft fuselage covers are made of tarpaulin having flannel lining where it contacts canopy glass panels.

Covers for the wings are of silk cloth.

Covers for the landing gear wheels and struts are made of tarpaulin and are furnished with quick-fastening straps.

Covers for the cannons are made of tarpaulin impregnated with water-proof compound.

Prior to starting and accelerating the engines, the covers should be taken off the aircraft and the blanking covers removed from the engines.

When some maintenance work is being performed in the front pressurized cabin on the ground, the automatic pilot handle should be fitted with a duralumin casing which is secured by two removable wing bolts. The casing has a flannel lining. The casing must be removed prior to flight.

The dome of remote-reading astro-compass ДАК-Б is covered on the ground with a protective metal casing.

The folded-dipole antennas of the aircraft are covered with special metal casings having flannel lining. The covers put on the aircraft should be properly tightened, for which purpose provision is made in the cover construction for rubber shock absorbers. The covers put on the aircraft are attached to one another by means of special hooks (See Fig.3). Covers and tightening straps should not be allowed to become loose, as strong gusts of wind may cause flapping of a loose cover with resultant damage to the protective coating of the aircraft skin.

The covers must be clean and in good condition; particular attention should be directed to the cleanliness of the flannel lining. Covers removed from the aircraft should be kept in the container designed for stowage of the ground equipment, or on racks. It is prohibited to drop the covers from the aircraft onto the ground or the concrete runway. Damp covers should be dried, torn ones must be repaired in due time.

Procedure to Be Used in Putting Covers on Aircraft

All fixtures and equipment employed for putting covers on and removing them from the aircraft must be kept clean and sound at all times. The covers should be put on the aircraft after its external surfaces are cleaned. Individual units of the aircraft should be covered in the following sequence:

1. Pitot tubes.
2. Cannon barrels.
3. Folded-dipole antennas.
4. Fuselage compartments Ф-2, Ф-3, front section of compartment Ф-4, and engine nacelles.
5. Fuselage compartment Ф-4 and rear pressurized cabin.
6. First detachable wing sections.
7. Second detachable wing sections.
8. Horizontal stabilizer.
9. Landing gear.

Prior to putting covers on the stabilizer and detachable wing sections, the rudder, elevator and ailerons should be locked and the landing flaps retracted.

Never operate the control system after the covers have been put on the aircraft.

Due to large dimensions of the aircraft covers two to three maintenance men and ladders are required for each of the covers to be put on and tightened.

When covering the wing and stabilizer, the covers should be tightened along their edges prior to fastening the shock absorbers to ensure close fit of the cover to the aircraft surface. The landing gear wheels should be covered at all times. In sunny periods compartment Ф-2 must be protected with a silk cover, which prevents the organic glass from deterioration and allows checking of the units and instruments in the cabin.

To reduce the time required for covering the aircraft, the covers should be accurately rolled up so that they may be quickly spread out on the aircraft surface.

To this end, the covers of the detachable wing sections and tail unit should be taken off from the edges towards the centre; then they should be spread in the form of a single narrow band and rolled up proceeding from the fuselage towards the fairing. The flannel lining should be inside the roll.

Covering of compartment Ф-2 is performed by a crew of three: two of the maintenance men on service ladders smooth out and pull on the cover, while the third one supports the cover from above to prevent the rod antenna of radio-compass APK-5 from being damaged.

[redacted]

50X1-HUM

Covering of compartment Ф-3 also requires three men; two of them (on service ladders) smooth out the cover on the fuselage and fasten the shock absorbers, while the third one works from above and attaches the cover to the cover of compartment Ф-2 with the aid of metal hooks. Putting covers onto the front section of compartment Ф-4 and onto the engine nacelles requires four men: one of them smooths out the cover on the fuselage and supports it, two of the maintenance men positioned on the engine nacelle smooth out the cover on the air intake, whereas the fourth one smooths out and fastens the shock absorbers from below.

Two men on ladders should be employed for putting the cover onto the rear portion of the fuselage, at the right and left sides, respectively. This cover is attached to the cover of compartment Ф-4 with the aid of metal hooks; on the underside it is fastened by means of shock absorbers.

Covering of compartment Ф-6 is carried out by three maintenance men: two of them smooth out and put on the cover, using ladders, whereas the third one (also perched on a ladder) attaches this cover to the fuselage cover by means of shock absorbers.

The stabiliser is covered by three men: two of them (on ladders) smooth out the cover, while the third (also on a ladder) fastens the shock absorbers on the underside.

Putting the cover on the wing is a job for three maintenance men: two of them unroll the cover from above and attach it to the fuselage cover, whereas the third one fastens the shock absorbers on the underside.

The landing gear wheels and struts are fitted with covers by a crew of two, the covers on the struts being fastened with the aid of special straps.

Operating Instructions

When putting the covers on or taking them off the aircraft, exercise care to avoid damage to the antistatics located on the stabiliser and the wing.

Covering of the aircraft in windy weather (with the wind above force 6) will call for more maintenance personnel. To prevent damage to the oxide film on the aircraft skin, use rubber or cloth mats and carpets. Thoroughly clean the mats and carpets of dust, dirt, and oil.

Remove oil stains and soot from the aircraft skin by using clean rags soaked in gasoline (containing no antidetonant) or in white spirit.

Aircraft glass panels should be wiped only with clean flannel.

3. AIRCRAFT GROUNDING

(Fig.4)

General

During parking, taxiing, as well as in flight the metallic structure of the aircraft gets charged with static electricity. If the aircraft structure is all bonded, collection and flow out of electric charges are not dangerous, as no spark discharges result.

In case the aircraft bonding is disturbed, that is, if individual sections of the aircraft are not reliably connected, there may arise conditions conductive for spark discharges between aircraft structural elements with different electric potential.

Besides, creating fire hazard where fuel vapours are present, such spark discharges interfere with operation of numerous radio equipments carried on the aircraft.

When the aircraft is being refuelled, the fuel flowing along hoses gets

electrified due to friction. If the hose is not grounded, the static charge accumulated by the fuel (hose) may reach a magnitude sufficient for a spark discharge to take place. To prevent fire hazard in the course of aircraft refuelling, it is necessary to ensure reliable grounding of the aircraft, the fuel dispensing gun and the refuelling truck. A reliable electric contact between the fuel dispensing gun and the aircraft is of special importance. When such a contact is established, the static charge formed on the hose will pass into the aircraft structure and further into the ground.

An aircraft returning from the flight carries an electric charge of high potential. Cases are known when a person touching such an aircraft before it has been grounded was struck to death by the electric charge. To prevent such accidents, as well as to preclude the possibility of the aircraft catching fire due to a spark discharge likely to occur during refuelling, the aircraft is provided with grounding equipment.

Grounding Equipment

This includes special wires (5 mm in diameter and 980 mm long) attached to each of the lower driven of the main landing gear bogeys with the aid of straps. Soldered to each of the wires is a 200 m. long cable, the free end of which has been unbraided to form a metal brush. During aircraft landing, towing, or parking the brushes of both cables are forced against the ground thereby eliminating the static electric charge built up on the aircraft. When on the maintenance area, the aircraft is also grounded with the aid of an electric cable connected to the aircraft structure. The cable terminates in a weight which is placed on the ground. Before flight the weights and electric cables are stowed in special pockets located in the front pressurized cabin (at frame No.12) and in the nose strut bay, at frame No.14 (at port side, looking forward).

After the aircraft has been landed and taxied onto the taxiway, the navigator-radar operator should open the front pressurized cabin hatch door and drop down the grounding device. The ladder from an aircraft returning from a mission should not be lowered until the grounding device is dropped down.

It is prohibited to touch the aircraft which has returned from a mission, unless it is grounded.

The aircraft is furnished with special devices (antistatics) which allow static electricity to flow into the atmosphere during flight. The antistatics are arranged as follows:

(a) on the fin (one);
(b) on the stabilizer (two);
(c) on the first detachable wing section (two);
(d) on the second detachable wing section (four).

An antistatic is essentially a brush made of fine synthetic fibre treated with silver nitrate, impregnated with alcohol-glycerine mixture, and fitted into a tube fabricated of АМгМ metal.

An antistatic protruding beyond the aircraft contours allows the charge to flow into the atmosphere.

Operating Instructions

To avoid emergency cases:

1. See that all antistatics are installed on the aircraft at all times and are charged with alcohol-glycerine mixture at regular intervals.

2. Check to see that the ends of the grounding brushes are always kept clean and in a position providing for their permanent contact with the ground irrespective of any possible variations in the aircraft load.

[redacted]

50X1-HUM

3. Check the cable and the weight for proper contact.

4. Make sure there is no oil under the brushes suspended from the main landing gear struts or under the grounding weight when they contact concrete or ground surface during aircraft parking.

5. Ground the refuelling truck and the fuel dispensing gun (Fig.5), when servicing the aircraft.

4. SECURING AIRCRAFT ON PARKING AREA

No provision has been made in the aircraft construction for any special fittings for securing the aircraft on the parking area. The aircraft is secured in a fixed position by means of chocks placed in front of and behind the main landing gear wheels. Should it become necessary, use may be made of the landing gear rigging fittings (to ensure more reliable fastening of the aircraft on the parking area).

Preparatory Operations

To prepare the aircraft for parking:

1. Place chocks in front of and behind the main landing gear wheels.

2. Lock the aircraft controls, for which purpose move the locking handle on the horizontal panel of the left pilot forward until a characteristic click is produced; set the rudder and the ailerons in the neutral position, and shift the elevator control stick forward as far as it will go.

3. Depress the pedals, manipulate the control wheel and the stick to make sure the aircraft controls are securely locked.

4. Close the bomb bay doors, the ЦОСАБ bay doors, the entrance hatches of the front and rear pressurised cabins, the entrance hatch of the rear non-pressurised cabin, the inspection and access panels.

5. If the tanks contain no fuel, load the front pressurised cabin (at frames Nos 5 and 6) with about 400 kg of ballast prior to putting covers on the aircraft.

6. Remove service ladders.

Securing Aircraft

The aircraft secured on the parking area is diagrammed in Fig.6. Securing is accomplished with the aid of hemp rope. The aircraft parking area should be equipped with special metal rings securely imbedded in concrete and so arranged as to correspond to the position of the aircraft on the parking area as well as to the location of the attachment fittings on the aircraft.

CAUTION: Never secure the aircraft by its tail skid.

5. LIFTING AND LOWERING AIRCRAFT BY MEANS OF HYDRAULIC HOISTS

For checking the operation of the units controlling the retraction and extension of the landing gear, for carrying out cannon bore sighting, as well as for checking aircraft levelling, etc, the aircraft may be mounted on hydraulic hoists (Fig.7).

For lifting the aircraft with the aid of the hydraulic hoists, the following thrust points are provided:

(a) two points in the lower section of the rear spar, at rib No.5 of the first detachable wing portion (at port and starboard sides). Prior to mounting the hydraulic hoists, the spar is fitted with thrust plates at these points (See Assy A);

(b) one point in the tail portion of the fuselage, near the tail skid, under frame No.66 (See Assy B);

(c) one point in the front portion of the fuselage, under frame No.26.

Aircraft lifting must be carried out on a concrete footing designed to withstand a specific pressure of not less than 7 kg/sq.cm.

The hydraulic hoists may be employed for lifting an aircraft having not more than 23,000 lit. of fuel in the tanks, provided the speed of the head wind does not exceed 5 m/sec.

The aircraft lifting procedure should be supervised by the chief technician.

Hydraulic Hoists
(See Fig.7)

The following hydraulic hoists are employed for lifting the aircraft:

1. Two hydraulic hoists 2 (32 t capacity each) fitted under the thrust plates in the rear spar of the first detachable wing portions.

2. Hydraulic hoist 3 (11 t capacity) fitted under frame No.66.

3. Hydraulic hoist 1 (11 t capacity) fitted under frame No.26.

Hydraulic hoist 2 fitted under the thrust plate in the rear spar of the wing consists of the following main parts:

(a) hydraulic system;

(b) three posts;

(c) three bed plates with spherical supports;

(d) upper and lower links;

(e) front and rear wheels.

All main components are connected by means of bolts allowing hydraulic hoist disassembly for shipping purposes. Hoist assembly is facilitated by match numbers stamped on its detachable components. During assembly parts with identical numbers are assembled into units.

The hydraulic hoist power section (See Assy A) consists of the following main parts:

(a) supporting head;

(b) rod lead screw 4;

(c) hoisting nut 5;

(d) locking nut 7 with reversing mechanism;

(e) rod and cylinder.

The hydraulic hoist operates in the following manner. With the aid of handles 6 and nut 5 lead screw 4 is driven out to the required height, but not over 400 mm, at which height the screw comes up against the stop. When the hydraulic fluid enters the cylinder, the rod goes up. It is retained in position by locking nut 7.

A clearance of 1.0 to 1.5 mm should be ensured between locking nut 7 and the thrust end face of the cylinder. The hydraulic hoist rod is forced down by a special reversing mechanism mounted on the locking nut. To bring the rod down, lower locking nut 7 until it rests against the cylinder, unlock screws 8 and turn them in as far as they will go, then rotate handles 6 counter-clockwise to bring the rod down. With the rod in the required position, set screws 8 in the initial position and lock them.

Note: Remove water and dirt, accumulating in the above-piston space, through the wash-out plugs.

[redacted]

50X1-HUM

Hoist Hydraulic System
(See Fig.7)

The hydraulic system of the hoist comprises:

(a) power section;

(b) pump 9;

(c) reservoir 10 and safety valves.

Each of the hoists uses 12 lit. of hydraulic fluid АМГ-10.

Pipe lines running from the pump to the reservoir and to the power section are made up of steel tubing.

The power section of the hoist is comprised of non-return valve 16, safety valve 13 and by-pass cock 17.

To lift the aircraft, screw cock 13 all the way out by turning it in the clockwise direction. As a result, cock 13 will open thereby allowing hydraulic fluid from the reservoir to be directed via the filter to the pump, whence it will be carried to the power section cylinder via the pipe line and non-return valve 16.

To lower the aircraft, slowly turn out cock 17, thereby opening it and connecting the cylinder with the return line; as a result, the hydraulic fluid will flow directly into the reservoir. The rate of aircraft lowering is controlled by cock 17. Should it become necessary to discontinue aircraft lowering, quickly turn cock 17 all the way in.

Hoist Posts
(See Fig.7)

The hoist posts have spherical supports at their ends allowing the power section to be set vertically with the aid of a plumb. The position of the power section is adjusted by rotating the spherical support with the help of handle 20.

The spherical supports are hinged to the bed plates.

When the hoist is transported assembled, the bed plates are retained in the horizontal position by bolts 21 or by carriers. The hoist is mounted on three wheels. The front wheel mounted on a special truss is steerable. The fork of this wheel carries tow-bar 23 serving for connection of the hoist to a truck or to another hoist during shipment.

The two rear wheels of the hoist are mounted on a common bar.

Hoist 3 fitted under frame No. 66 differs from hoist 2 by its load-carrying capacity and in that it has a movable supporting head (See Assy Б).

To prevent hoist 3 from overturning during aircraft lifting, its power section is furnished with a movable supporting head arranged in the aircraft longitudinal axis.

Hydraulic hoist 1 fitted under frame No.26 serves as a safety support during aircraft lifting. This hoist differs from hoist 3 in that it has swivel support 24 instead of the head.

Hoists 1 and 3 are served with 10 lit. of hydraulic fluid АМГ-10 each.

Technical data of the hydraulic hoists are presented in Table.2.

Table 2

Technical Data of Hydraulic Hoists Used for Lifting Aircraft

Technical data	Place of installation		
	Thrust plates on wing rear spar (See Fig.7, Ref.No.2)	Frame No.66 (See Fig.7, Ref. No.3)	Frame No.26 (See Fig.7, Ref.No.1)
Load-carrying capacity, kg	32,000	11,000	11,000
Minimum height of hoist, mm	2300	1800	1500
Maximum height of hoist, mm	3350	2980	2680
Screw travel, mm	400	230	230
Power cylinder rod travel, mm	650	950	950
Pressure of bed plates (450 mm in diameter) on ground when lifting fully loaded aircraft, kg/sq.cm.	6.5	4	4
Cylinder displacement, lit.	10.7	8	8
Reservoir capacity, lit.	13.5	10.5	10.5
Pressure in cylinder at maximum weight of aircraft, kg/sq.cm.	200	140	140
Effort on pump handle when lifting aircraft with rated load, kg	20	20	20
Weight of hoist, kg	~600	~400	~410
Number of hoists in set per 1 aircraft	2	1	1

Preparation for Aircraft Lifting

1. Set all switches in the OFF (ВЫКЛЮЧЕНО) position.

2. Release the parking brakes and make sure the landing gear wheels are free.

3. In case landing gear operation is to be checked, see that the torsion links of the main landing gear struts do not carry screw clamps (Fig.8).

<u>Note</u>. If aircraft lifting is not connected with adjustment of the mechanisms controlling landing gear operation, the screw clamps may be left in position on the struts so as to decrease height of the aircraft lift.

4. Install the thrust plates on the rear spar, at rib No.5, for the main hoists (See Fig.7, Ref. No.2).

5. Make certain that the aircraft is properly grounded, and that the grounding wire is long enough to ensure a proper contact between the weight and the ground after the aircraft has been lifted.

6. In winter, clean the thrust plates of ice and snow.

7. Check to see that the holes in the spherical support adjusting screw necks are not clogged with dirt, which may affect vertical adjustment of the hoists.

8. Make sure the hydraulic hoists are in good repair by checking the reservoirs for the presence of hydraulic fluid, the joints for tightness, and the bed plates for proper attachment to the spherical support covers. Eliminate the defects detected.

9. Check the hoists for proper operation, for which purpose close by-pass cock 17 (See Fig.7) and swing the pump handle several times, making sure the hoist rod goes up.

10. Take the chocks from under the wheels, remove the service ladders and other ground equipment which may interfere with the aircraft lifting.

[redacted]

50X1-HUM

Mounting Hoists

Prior to fitting the hoists under the thrust points of the aircraft, proceed as follows:

1. Fully extend the hoist wheels.

2. Bring the hoists under the thrust points of the aircraft. Lower the hoists onto the bed plates, for which purpose bring their wheels to the extreme upper position.

CAUTION: Never start lifting the aircraft with the hoists positioned on the wheels.

3. Remove the casings from the hoist heads.

4. By rotating the lead screws of the hoists to be fitted under the wing rear spar and under frame No.66, bring the hoist rods up until they rest against the spherical surfaces of the thrust plates installed on the aircraft. Lift the support of the hoist to be fitted under frame No.26 until there is a clearance of 10 to 15 mm (See Fig.7, Ref. No.24) between the support surface and the aircraft skin.

5. Operate the pumps, and after making sure that the hoists are properly fitted under the respective thrust points of the aircraft, proceed adjusting the vertical position of the hoists, making use of the lower spherical support screws and the plumbs suspended from the hoists.

Lifting Aircraft

1. On command of the technician in charge of the lifting procedure, start bringing up the rods of the two main and the tail hoists; see that the rod of the tail hoist goes up at the same rate as the other two, to avoid imposing a too heavy load on the tail hoist.

2. When lifting the aircraft with the aid of two main and one tail hoists, the rod of the hoist fitted under frame No.26 should be extended in a manner allowing a 10 to 15 mm clearance to be always provided between the aircraft skin and the hoist support surface. This hoist serves as a safety device preventing the aircraft from tipping with its nose forward, therefore no load should be imposed on it during aircraft lifting.

The lifting procedure completed, the rod of the hoist fitted under frame No.26 will be taken up so that its support should closely contact the frame.

3. As the aircraft is being lifted, it is necessary to always shift the hoist locking nut down the rod, thereby keeping the rod all the time in the locked position to prevent it from coming down in case of hydraulic system failure. After the lifting procedure is completed, relieve the hoist hydraulic system.

4. If the landing gear is not to be extended or retracted, the aircraft should be lifted to a height ensuring a 50-mm clearance between the wheel tyres and the ground. In case the landing gear is to be checked, the clearance should amount to 100 mm. For the main landing gear bogey this clearance will be determined by the position of the front wheel couple, as the rear wheels are lifted higher than the front ones due to the action of the stabilising shock absorber.

5. Having lifted the aircraft, check all hoists for proper locking.

Lowering Aircraft
(See Fig.7)

1. Make sure the service ladders and other equipment lying under the aircraft or near it do not interfere with aircraft lowering. Unlock the hoist rods, for which purpose take up the locking nuts.

2. Open by-pass cock 17 in the hoist fitted under frame No.26, and bring down the hoist rod together with swivel support 24.

Then mount the hoist onto the wheels and move it from under the aircraft.

3. On command of the technician in charge, start lowering the aircraft. To this end first open by-pass cocks 17 installed in the hoists fitted under the rear spar of the first detachable wing portion, at rib No.5. By-pass cock 17 in the hoist fitted under frame No.66 should be open only after the nose strut wheels touch the ground. From this moment on, aircraft lowering is accomplished with the aid of the three hoists.

CAUTION: If the above sequence of operations is not observed, simultaneous lowering of the rods in all of the three hoists before the nose strut wheels touch the ground may cause damage to aircraft skin at frame No.66.

4. After the hoist heads lose contact with the thrust points of the aircraft (a clearance is formed), fit the chocks under the aircraft wheels and bring the hoist rods and screws all the way down.

If the rod is in the extreme lower position but the hoist head is still in contact with the aircraft thrust point, rotate hoist handle 6 counter-clockwise to take the hoist head down.

5. Mount the hoists on their wheels and move them from under the aircraft.

6. Cover the upper parts of the hoists with casings.

7. Remove thrust plates from the wing rear spar.

Operating and Maintenance Instructions

1. When lifting the aircraft with the purpose of checking operation of the landing gear control mechanism direct particular attention to the position of the moving supporting head of the hoist fitted under frame No.65, since careless installation of the hoist may lead to the tail skid hitting the hoist head with resultant damage to the electric mechanism.

2. When lifting the aircraft for removing the main landing gear wheels, fit the hoists under the wing rear spars in a manner allowing easy removal of the wheels.

3. When checking the mechanisms controlling landing gear extension and retraction, put the weight and the aircraft grounding wire into a special pocket, arranged in the nose strut bay, and drop down the grounding device from the cabin of compartment Ф-2.

4. Keep the hoists clean.

5. Fill the hoists only with hydraulic fluid АМГ-10.

6. Pour hydraulic fluid АМГ-10 into the hoist reservoir, with the power cylinder rod depressed; see that the fluid does not contain any foreign matter capable of clogging the filter.

The minimum and maximum levels of the fluid in the reservoir are checked with the aid of a gauge rod attached to the filler plug.

7. It is recommended to check the condition of the hoist packing rings at six months' intervals.

8. Treat all threaded and rubbing surfaces with ЦИАТИМ-201 lubricant at regular intervals.

9. The hoist surfaces having no protective paint coating should be periodically coated with petrolatum.

10. During prolonged idle periods the face of the hoist power cylinder should be lubricated once a month, for which purpose the rod should be brought in the upper position after inserting 25 cu.cm. of hydraulic fluid АМГ-10 into the cylinder (through the wash-out plugs).

11. Prior to moving the hoists from the storage area to the aircraft, first lubricate their rods and then bring them down.

[redacted]

50X1-HUM

12. Water and dirt accumulating in the above-piston space of the hoist should be periodically discharged through the wash-out plugs.

13. The hoists should be transported about the airfield only on the wheels, with the bed plates locked.

14. Prior to fitting the hoist under the aircraft:

(a) use the rod gauge to check that the reservoir contains the required amount of hydraulic fluid;

(b) check to see that the hoist operates properly, for which purpose rock the pump handle several times watching the rod to go up;

(c) manipulate the screws of the spherical supports to set the hoist in the vertical position, checking it against the plumb.

15. With the aircraft being lifted, the hoist must bear against its bed plates.

16. No leakage of hydraulic fluid is allowed in any of the hoist joints. Tighten up the joints if leakage has been detected.

17. The hoist may be transported only when it is in the vertical position. Should it be necessary to transport the hoist in an inclined or horizontal position, the hydraulic fluid should be first drained out.

18. If handles 6 (See Fig.7) seize during hoist head lowering, never try to overcome the difficulty by knocking on the handles to avoid their breakage.

19. See that the protective covers and the threaded portion of the hoist support are in good condition.

20. Close reservoir shut-off cock 13 (See Fig.7) when the hoist is inoperative.

6. POSITIONING AIRCRAFT IN LINE OF FLIGHT

The aircraft is positioned in the line of flight on the following occasions:

(a) for checking the aircraft levelling data against the certificate;

(b) for gun bore sighting;

Note: The levelling points designed for gun bore sighting are marked with red spots encircled by blue bands.

(c) for installing gyro-horizon AГБ-2, turn indicator ЭУП-46, the instrument panels of both pilots, and Pitot tube ТП-156;

(d) for weighing the aircraft.

The aircraft is positioned in the line of flight according to the levelling points provided on its units. The levelling points of the fuselage are arranged in the horizontal plane passing through the horizontal reference line of the aircraft. The levelling points are 5-mm diameter holes made on the fuselage sides and marked with 20-mm dia. red spots. Apart from these points, the fuselage underside has holes with thread M4x0.7; the holes are arranged in the aircraft symmetry plane and are designed to receive the shackle of the plumb string. These holes are likewise marked with 20-mm dia. spots. The levelling points on the wing and the empennage are punched and marked with 20-mm dia. red spots. The linear dimensions determining the position of the levelling points of the wing and the empennage are so given as to make allowance for the deflection resulting from the weight of the construction of the aircraft mounted on three hydraulic hoists. Positioning of the aircraft in the line of flight should be accomplished in a closed building. The levelling data are checked on the aircraft carrying no crew, fuel or ammunition, and with the landing gear extended.

Placing the aircraft mounted on the hoists in the line of flight in field conditions is not allowed if the speed of the wind exceeds 5 m/sec.

Preparatory Operations and Equipment

1. Use four hydraulic hoists to lift the aircraft to a height allowing a clearance of not less than 50 mm to be provided between the wheel tyres and the ground.

2. Position the tripod for the levelling instrument to the left or to the right of the aircraft in the vicinity of frame No.12. at a distance of 6 to 7 m. from its longitudinal axis, or in the vicinity of frame No.57 at a distance of 5 to 6 m.

Having mounted the levelling instrument onto the tripod plate, fasten it with the check screw and then set it in the horizontal position, making use of the level. For checking horizontal adjustment of the levelling instrument, it is turned three times in succession through 120°; the levelling instrument tube should be moved to a new position smoothly to avoid disturbing the level adjustment.

3. Check the condition of the levelling pole. This pole carries a swivel head with a pointed stud and a clamping screw at one end and a plumb at the other. Depending on the height of a particular levelling point, the levelling pole length may be adjusted after loosening the clamping screws. When checking the levelling data of the aircraft the levelling pole should be held in a position allowing the stud point to enter the levelling point hole, while the pole proper must be set vertically (according to the plumb).

Longitudinal Positioning of Aircraft in Line of Flight

(Fig.9)

Longitudinal positioning of the aircraft in the line of flight (so that the horizontal reference line comes to be arranged in the horizontal plane) is performed relative to points 30 and 31 on the fuselage surface (at frames Nos 21 and 55). by adjusting the height of the hydraulic hoist fitted under frame No.66.

Note: The position of points 29 and 32 relative to the horizontal plane should be measured with the aid of the levelling instrument when checking the aircraft levelling data; points 33, 34, and 35 should be measured when performing gun bore sighting.

Transverse Positioning of Aircraft in Line of Flight

(See Fig.9)

Transverse positioning of the aircraft in the line of flight is carried out relative to points 10 and 10' by adjusting the height of the left-hand and right-hand hoists fitted under the respective detachable wing portions, where the rear spar axis crosses the axis of rib No.5. The aircraft position is checked against points 30 and 31 (located at the aircraft sides). The respective positions of these points relative to the horizontal plane must not differ by more than 2 mm. Levelling points 10 and 10' are located in the lower zones of the rear spar of the first detachable wing portions, on the axes of ribs No.4.

Note: When carrying out transverse positioning of the aircraft in the line of flight, it is necessary to remove the swivel head from the levelling pole.

Adjustment of the aircraft position with the aid of the hoists should be performed in a smooth manner.

[redacted]

50X1-HUM

7. AIRCRAFT LEVELLING
(See Fig.9)

Checking the relative position of the airframe units by the levelling points is known as aircraft levelling. The procedure consists of the following two operations: checking the relative positions of the levelling points (as to their height) with the aid of the levelling instrument, and checking symmetry of some of the levelling points projected onto a horizontal surface (on the hangar floor, on the runway or on some concrete ground) with the help of plumbs and a measuring tape.

Levelling is carried out only after positioning the aircraft in the line of flight.

The actual results obtained in measuring the relative positions of the levelling points should be within the values presented in the levelling data of each aircraft. These data are usually given on a special blue print which represents the main document to be consulted when checking the aircraft levelling data.

When levelling the aircraft, check the following:

1. Position of points 29 (29') and 32 (32') on the fuselage.

Permissible displacement of points 29 (29') relative to points 30 and 31 should be within -10±6 mm, and points 32 (32') - within -26±10 mm.

2. Angle of setting and transverse position of the wing.

The angle of wing setting is determined by the elevation of levelling points 10, 9, 14 and 16 on the wing rear spar over points 11, 13, 15 and 17 on the front spar, respectively. These data (in linear measurements) are given in Table 3.

Table 3

Levelling Data Determining Angle of Wing Setting

Point Nos according to Fig.9	Rib No. according to Fig.9	Elevation, mm	Allowance, mm	Permissible difference between elevation values for right and left wings, mm
10-11	4	0	±8.5	8.5
$12-13^2$	7	25	±7	7
$9-13^2$	7	12	±7	7
14-15	13	21	±5	6
16-17	24	15	±4	4

Note: Column 3 contains elevation values of points 10, 12, 9, 14, and 16 over points 11, 13, 15 and 17 for the left and right wing respectively.

The transverse position of the wing is determined by lowering of points 9, 14 and 16 relative to point 10. The lowering values of these points (in linear measurements) are given in Table 4.

Table 4

Levelling Data Determining Transverse Position of Wing

Point Nos according to Fig.9	Rib No. according to Fig.9	Lowering, mm	Allowance, mm	Permissible difference between lowering values for right and left wings, mm
12-10	7	24.5	±3	3
9-10	7	37.5	±4	4
14-10	13	236	±8.5	8.5
16-10	24	575	±17	17

Note: Column 3 contains the lowering values of points 12, 9, 14 and 16 relative to point 10 for the left and right wings.

3. Angle of setting and transverse position of the stabilizer.

The angle of stabilizer setting is determined by the elevation of points 21 and 23 on the rear spar over points 22 and 24 on the front spar respectively. These data (in linear measurements) are given in Table 5.

The transverse position of the stabilizer is determined by the elevation of point 23 over point 21, which should amount to 141±18 mm. The difference in actual elevation values for the right and left sides of the stabilizer should not exceed 18 mm.

Table 5

Levelling Data Determining Angle of Stabilizer Setting

Point Nos according to Fig.9	Rib No. according to Fig.9	Elevation, mm	Allowance, mm	Permissible difference between elevation values for stabilizer right and left sides, mm
21-22	4	48.5	±4	4
23-24	14	25	±2	2

Note: Column 3 contains the elevation values of points 21 and 23 over points 22 and 24 respectively.

The aircraft units are checked for symmetrical position relative to the longitudinal axis after checking relative positions of the levelling points by height. The aircraft symmetry axis is represented by the straight line assumingly drawn between the plumbs suspended from points 1 and 2; points 0 and 3 should not deflect from the axis by more than 2 mm. Projections of the levelling points onto the horizontal plane, when checking the aircraft units for symmetrical arrangement, are determined with the aid of plumbs suspended from these points.

After laying out the aircraft axis of symmetry on the floor, the following should be checked:

1. Difference in distances A between points 3 and 16 projected on the floor to the right and to the left of the aircraft. This difference should not exceed 20 mm.

2. Difference in distances Б between points 3 and 12 projected on the floor to the right and to the left of the aircraft. This difference must not exceed 15 mm.

3. Difference in distances B between points 3 and 23 projected on the floor to the right and to the left of the aircraft. This difference should not exceed 10 mm.

4. Difference in distances Г between points 25 and 26 to the right and to the left of the aircraft. This difference should not exceed 20 mm.

Note: Point 26 is located at the end fairing of the fin; point 25 - on the stabilizer external skin at the intersection of the rear spar and rib No.14.

[redacted]

8. GROUND EQUIPMENT FOR SUPPLYING AIRCRAFT WITH FUEL, OIL, OXYGEN, COMPRESSED AIR AND POWER

Servicing the aircraft on the parking area or preparing it for flight involves filling its tanks with fuel and oil, charging the aircraft systems with hydraulic fluid АМГ-10, air and oxygen, as well as supplying it with power from the ground sources.

Servicing the aircraft with fuel is performed by employing refuelling trucks, which deliver fuel through ten service tank fillers in the following sequence:

Tank group V (service tank No.6, left and right);
Tank group IV (service tank No.16, left and right);
Tank group III (service tank No.10, left and right);
Tank group II (service tanks Nos 4 and 3);
Tank group I (service tanks Nos 2 and 5).

The amount of fuel delivered into a group of tanks is checked with the help of filler floats (See Fig.5).

Fuel delivery into the tanks of groups I, III, IV and V is effected via eight filler floats (two floats for each of the tank groups).

Tanks of group II: tank No.3 is furnished with a mechanical fuel level indicator mounted on the tank proper, whereas tank No.4 is filled through the float of tank group V. When the aircraft is serviced with fuel, the filler floats are inserted into the fillers of the tanks of the respective group. Each of the floats bears the number of the respective tank group stamped upon it and has a scale with three divisions, painted dark-green, yellow, and red. The dark-green colour denotes that the tank is empty, the yellow colour means that the tank is filled with fuel, and the red colour warns that the tanks are overfilled and that the fuel has entered the aircraft vent system. The floats should be always kept clean and stored in a room on special hooks.

Do not knock on the float body.

To accelerate aircraft refuelling, fuel may be delivered by two, three, or four refuelling trucks at the same time, with the above sequence of tank group filling duly observed. In case of urgent necessity, any order of tank filling is allowed, provided a hoist is fitted under frame No.66 to prevent the aircraft from pitching onto the tail skid due to displacement of the centre of gravity.

The fuel dispensing guns should incorporate filters with gauze No.0063 (8270 meshes per 1 sq.cm.). If the float pointer binds during fuel delivery into the tank, shift the pointer towards the green division. After the aircraft refuelling procedure is completed the tank fillers should be securely closed. For this, fit the plug into the tank filler and press it in the centre marked with the word НАЖИМ (PRESS) thereby sinking the plug flush with the skin.

See that the sealing rubber on the filler plug is intact.

Filling of the tanks incorporated in the system of engine lubrication, turbo-starter starting, the main and emergency hydraulic systems is performed by a special servicing truck. The truck carries three tanks, not less than 100 lit. capacity each:

(a) for starting fuel;
(b) for hydraulic fluid АМГ-10;
(c) for MK-8 or transformer oil.

Each of the above tanks has a filler hose with a dispensing gun and a filter (gauze having 8270 meshes per 1 sq.cm.). Delivery of starting fuel, hydraulic fluid АМГ-10, oil MK-8, or transformer oil into the aircraft tanks is effected with the aid of a hand pump. In case no special servicing truck is available,

50X1-HUM

the above systems are serviced with the help of a measuring bucket and a funnel with a gauze (8270 meshes per 1 sq.cm.).

Charging of the aircraft with liquid oxygen is accomplished by the use of a standard servicing truck carrying liquid oxygen, or Dewar flasks and a charging pipe. The charging pipe carries at its ends special attachment fittings with sealings for connection to the standard servicing truck and to the aircraft pipe union (at frame No.13, starboard).

For ease of transportation and stowage the pipe is split into two parts, the ends of each part being closed with plugs supplied with the pipe.

For charging the aircraft air system with compressed air a special cylinder bank is employed, comprising 3 to 5 compressed air cylinders, carried on a four-wheel cart (or on a truck) and mounted on two wooden supports (Fig.10). The cylinders are furnished with a common manifold and a pressure gauge for 150 kg/sq.cm. To prevent moisture in the cylinders from finding its way into the aircraft air system, the cylinders are mounted on the supports at an angle of 15 to 20°. Compressed air from the cylinder bank is fed into the aircraft air system via a flexible charging hose. The hose is connected to the pipe union of the aircraft air panel located at the left engine only after it has been blown with air.

When charging the air system, pressure is checked by the readings of the pressure gauge mounted on the cylinder bank hose. After the aircraft system has been charged to the required pressure, close the valves on the air panel of the left engine and on the cylinder bank manifold, loosen the union nut holding the hose to the manifold, bleed pressure from the charging hose and then detach the latter from the air panel of the left engine.

CAUTION: Do not detach the charging hose from the left engine air panel, unless air has been bled from the former.

In case a cylinder bank is not available, charge the aircraft with compressed air by employing compressed air cylinders arranged at an angle of 15 to 20°.

Do not allow pressure in the cylinder bank or in individual compressed air cylinders to drop below 10 kg/sq.cm.

Prior to transporting the compressed air cylinders to the aircraft, fit them with safety rubber rings to safeguard the cylinders against bumps. Compressed air cylinders should be stowed on racks under a tent.

The cylinder bank is also employed for charging the wheel tubes, the stabilising shock absorber, and the landing gear shock absorbers. Prior to charging the wheel tubes, remove the nut holding the hose to the left engine air panel and install the wheel tube charger in its place (Fig.11).

Note: The charging hoses should be always kept clean. Do not twist the hoses or dent the facets of their union nuts. Careless handling of the charging hose will usually result in failure of the reference pressure gauge.

Power is delivered to the aircraft from a D.C., 27.5 - 28 V, 17-kW source. Each of the aircraft has a box for connection of the ground power source to the aircraft mains and a set of cables. The cables and the box allow connection of one or two aircraft to the ground power source. The box has receptacles for connection of inspection lamps, solders, etc. To safeguard the box terminals against short circuits which are likely to occur due to moisture and dust, the box should be protected with a tarpaulin tent attached to a rigid frame.

[redacted]

50X1-HUM

9. AUXILIARY EQUIPMENT

Hydraulic Jack for Replacement of Landing Gear Wheels

The equipment designed for replacement of the landing gear wheels includes two hydraulic jacks, a rigging fitting and bolts for its attachment. For replacement of the nose wheel the hydraulic jack is fitted under the lug on the nose strut (Fig.12); to prevent the aircraft from rolling back chocks are fitted un the main landing gear wheels. With the aid of the hydraulic jack, the nose strut is brought to a height allowing wheel replacement to be carried out. For replacement of the main landing gear wheels. mounted on the front axle of the bogey, th jack is fitted under the special lug in the lower part of the bogey; in case th wheels mounted on the rear axle of the bogey are to be replaced, the jack should be fitted under the rigging fitting which is installed on the aircraft towing bracket (Fig.13) and is held in place by bolts. Having replaced the wheels, rem the rigging fitting and turn the bolts into the bracket holes.

Hydraulic jack data are as follows: capacity - 20,000 kg; minimum height - 290 mm; maximum height - 545 mm; operating pressure - 320 kg/sq.cm.

The pump of the jack (See Fig.12) is operated by means of cast rocker 1. The upper part of the rocker mounts handle 2, the lower part accommodates the ax and two spindles with rollers which actuate the jack pump plungers as handle 2 i being shifted in either position. The rocker has a removable axle with a lock.

Handle 2 is retained in the rocker recess by a pin with a lock.

The jack pump operates as follows. When rocker 1 is displaced, one of the pump plungers forces the operating fluid into the power section of the jack, whereas the other plunger draws the fluid from the reservoir (See Fig.12).

While the plunger comes down, the operating fluid is forced through valve 5 into the pressure line and further into the power cylinder whose rod lifts the aircraft. Simultaneously, the space under the other plunger. is filled with the operating fluid supplied from reservoir 4 via valve 3. When pressure comes to exceed 340 kg/sq.cm., safety valve 6 opens thereby bleeding excessive pressure into the suction line. The return travel of the power cylinder rod depends on the action of by-pass cock 10, which by-passes the operating fluid from the inner in the outer cylinder, when the aircraft is being lowered. As knob 8 of cock 10 is being turned in, ball 9 compresses spring 7 and opens the by-pass valves. Throug the opening formed between the ball and the knob rod, oil from the inner reservo flows via the duct into the outer reservoir thereby allowing the rod to come to the lower position.

The jacks and the rigging fitting are stowed in a container.

When not in use, the jack should be covered with a hood to protect the pow section from dust and sand.

Operating fluid (hydraulic fluid АМГ-10) is poured into the reservoir thro a funnel with filtering gauze.

Engine Servicing Ladder
(Fig.14)

The servicing ladder is a collapsible metal structure. Its foot platform is mounted at a height of 3029 mm. The ladder hand rails are laid with rubber where the ladder is likely to contact the aircraft skin. Located under the foot platfo is a special box for stowage of soft footwear to be used when performing some operations on the aircraft skin. The servicing ladder is mounted on two wheels and

two supporting cones preventing the ladder from spontaneous rolling. The ladder is furnished with a scraper and brushes for cleaning shoes prior to climbing up.

Stabilizer Servicing Ladder
(Fig.15)

Apart from its direct purpose the ladder may also be employed for servicing the tail mount.

The foot platform of the servicing ladder is located at a height of 3300 mm; the height of the ladder complete with the hinged portion amounts to 5650 mm. For servicing the stabilizer on the underside hinge off ladder 4 and bring the servicing ladder under the stabilizer; then lift wheels 8 by means of screws 9 and set front upright 3 onto the supporting cones.

The servicing ladder can carry not more than three men at a time. To reach to the upper part of the stabilizer hinged ladder 4 should be set in the upper position, for which purpose:

(a) release the retainers of strut 5 in the lower part of ladder 1;

(b) set hooks 7 of strut 5 on the tube of front upright 3 and operate winch 10 to lift hinged ladder 4 to the upper position;

(c) lock the hinged ladder support on front upright 3.

Having adjusted hinged ladder 4, bring the servicing ladder to the stabilizer so that the upper part of the hinged ladder laid with canvas comes in contact with the stabilizer tip.

Then set upright 3 on the supporting cones.

Hinged ladder 4 can accommodate only one person.

Note: For ease of transportation, the servicing ladder can be readily disassembled; all its component parts are marked. The marking should be restored whenever it is found to be damaged.

On the aircraft parking ground the servicing ladder is transported by two men; the ladder should be mounted on four wheels, the trailing wheels being swivel ones.

Over longer distances the servicing ladder is transported in a truck.

Storage and Care of Auxiliary Equipment

All auxiliary equipment employed for aircraft servicing should be kept in a closed building. All threaded joints and moving parts should be treated with ЦИАТИМ-201 or КВ lubricant at regular intervals.

When using the servicing ladders, check the condition of the supportingcones, which should be properly sharpened, especially in winter time.

Slings

The aircraft ground equipment includes 13 sets of slings which, according to the list of the ground equipment following below, are designed for handling individual units of the aircraft. The slings allow an individual unit of the aircraft to be suspended in a manner most convenient for work or to be moved over short distances. The cables in a sling set are so arranged that the lift resultant passes through the centre of gravity of the aircraft unit, thereby causing the latter to occupy a definite position.

In some slings the cables are furnished with spacers manufactured in the form of bars or tubular welded triangles.

A sling set consists of the following component parts:

1. A shackle for suspending the sling from the hook of a truck-mounted crane;

[redacted]

50X1-HUM

2. One or several cables and spacers.

3. A fastening device or a grip.

Each sling set has a tag carrying instructions on the use of the given sling and the No. of the drawing according to which it has been manufactured.

Fig.16 illustrates arrangement of slings on individual units of the aircraft.

Places for attachment of the sling lifting eyes on the surface of the detachable sections of the wing, fin, stabiliser, elevators, and rudder are marked with black rings, 20x30 cm in size.

When installing lifting eyes, see that the respective places on the surfaces of the unit in question are protected with glued rubber pads, safeguarding the skin against damage.

Do not employ slings for handling loads other than specified.

Should it be necessary to adjust the length of the sling cables with the aid of turnbuckles to make possible removal and installation of the engine, see that the ends of the bolts do not project beyond the check holes in the turnbuckle bushings.

The slings should be kept in a closed building; their cables should be treated with ЦИАТИМ-201 lubricant. Inspect slings for condition whenever using them and at regular intervals. In case of worn or ruptured strings in cables, dented or stripped threads on bolts, etc., recondition the parts or replace them by new ones if damaged beyond repair.

10. LIST OF GROUND EQUIPMENT EMPLOYED IN AIRCRAFT SERVICING

Nos	Description	Drawing No.
1	2	3
	I. HOISTING DEVICES	
1	Hydraulic hoist fitted under frame No.26	H9901-10
2	Hydraulic hoist fitted under frame No.66	H9904-10
3	Hydraulic hoist fitted under first detachable wing section	H9910-0
4	Hydraulic jack for replacement of wheels	H9942-40
5	Slings for engines	H9960-14
6	Slings for turbo-starter	H9960-35
7	Slings for detachable wing section, with lifting eyes H9920-250, -251, -252, -253	H9920-85
8	Slings for stabiliser with lifting eyes H9931-102, -103	H9931-100
9	Slings for fin with lifting eyes H9934-1, -3	H9934-0
10	Slings for ailerons with lifting eyes H9935-4	H9935-0
11	Slings for landing flaps of detachable wing section with lifting eyes H9920-32, -34	H9920-31
12	Slings for rudder with lifting eyes H9933-31, -32	H9933-30
13	Slings for elevator with lifting eyes H9932-1, -2, -8	H9932-0
	II. AUXILIARY EQUIPMENT	
	A. Air and Hydraulic Systems Service Equipment	
14	Wheel tube charger	H9941-31
15	Wheel tube pressure gauge	H9941-41
16	Brake system pressure gauge	H9941-310
17	Flexible hose for charging air system (Fig.17)	H9941-5
18	Landing gear shock struts charger-and-pressure gauge	H9941-48
19	Charging pipe union for item H9941-5	H9904-210
20	Third damper replenishment unit (Fig.18)	H9842-0
21	Installation for flushing brake system with hydraulic fluid (Fig.19)	H9956-150
22	Truck-mounted hydraulic test unit (Fig.20) Hydraulic test unit includes: measuring instruments (dwgs H9941-31; H9941-48), hose (H9941-5), and charging pipe unions (H9904-210, H9941-310, H9941-31)	H9956-0
	B. Aircraft Towing Facilities	
23	Tow-bar	H9942-110
24	Nose wheel control gear	H9942-0
25	Cable	H9900-20
	C. Airframe Service Equipment	
26	Stabiliser service ladder	H9931-0
27	Service ladder for first detachable wing section	H9920-0
28	Ladder for cabin of compartment Ф-6	H9904-250
29	Stand with scrapers and brushes used for climbing into cabin of compartment Ф-2	H9902-5
29a	Wheel chocks	H9941-0
29b	Telescopic ladder for inspection of rudder (Fig.21)	H9941-0
	D. Equipment for Mounting and Dismounting Aircraft Individual Units	
30	Main landing gear wheel remover	H9941-700
31	Brake disc remover	H9941-360
32	Nose wheel remover	H9941-290
33	Wheel tyre remover	CB-01
34	Fixture for installing crew seats	H9973-21
35	Wing panel remover	H9920-120
36	Bogey for installation and removal of landing gear wheels	H9941-110
37	Screw clamp (spacer) for main strut torsion links	H9941-320
38	Screw clamp (spacer) for nose strut torsion links	H9942-70
39	Levelling pole	H9999-30
40	Engine mounting cart	3563
	E. Equipment for Checking and Adjusting Systems	
41	Calibration rheostat for regulating temperature of cabin glass panels on ground (Fig.22)	H7907-20
42	De-icer thermometer (Fig.23)	H7907-0
43	Unit for checking fuel system control equipment	H9972-10

[redacted]

50X1-HUM

1	2	3
	F. Electric Equipment, Filling Equipment, Containers for Storage of Ground Equipment	
44	Electric cable	H7211-31
45	Electric cable	H9972-30
46	Pipe enclosed in cover H9999-460 for charging oxygen system	H9978-0
47	Fuel indicator float	H9961-500
48	Fuel indicator float	H9961-600
49	Box for connection of power supply source	H9972-0
50	Fuel drain hose	H9999-270
51	Fuel drain hose	H9999-275
52	Funnel for oil	H9999-16
53	Funnel for hydraulic fluid AMT-10	H9999-28
54	Funnel for inserting hydraulic fluid AMT-10 into brake system	H9956-300
55	Can, 15-lit. capacity	H9999-3
56	Bucket, 8-lit. capacity	H9999-400
57	Bucket, 10-lit. capacity	H9999-20
58	Pan	H9941-380
59	Container in bomb bay	H9999-350
60	Container for storage of aircraft-carried tools and accessories	H9999-100
61	Container for rigging	H9999-210
	G. Covers and Plugs	
62	Cover for fuselage compartment located between frames Nos 1 - 12	H9999-51
63	Cover for fuselage compartment located between frames Nos 12 - 22	H9999-52
64	Cover for fuselage compartment located between frames Nos 22 - 36	H9999-75
65	Cover for fuselage compartment located between frames Nos 36 - 50	H9999-76
66	Cover for fuselage compartment located between frames Nos 50 - 64	H9999-54
67	Cover for tail gun mount	H9999-55
68	Cover for horizontal tail	H9999-56
69	Cover for first detachable wing section	H9999-57
70	Cover for second detachable wing section	H9999-58
71	Cover for main landing gear strut locks	H9999-90
72	Covers for main landing gear wheels	H9999-80
73	Covers for nose wheels	H9999-81
74	Cover for nose strut lock	H9999-88
75	Cover for Pitot tube	H9999-72
76	Cover for cannon barrels	H9999-89
77	Cover for moving gun mount	H9999-451
78	Cover for aerial camera mount	H9999-452
79	Cover for antenna of range finder	H9999-454
80	Cover for transponder antenna	H9999-455
81	Cover for radio altimeter PB-2 antenna	H9999-456

1	2	3
83	Rubber mat for protection of aircraft skin against damage	H9999-63
84	Rubber mat to be used when working in fuselage tunnel	H9999-66
85	Blanking cover for air intake duct	H9969-42
86	Blanking cover for exhaust pipe	H9969-46
87	Blanking cover for access hole	H9969-60
88	Plug for static pressure openings	H9977-10
89	Plug for starter	H9968-1
90	Casing for folded-dipole antenna	H9999-130
91	Plug for opening in wing leading edge	H9999-92
92	Plug for opening in front part of fin	H9999-94
93	Plugs for signal flare 9HCP-39 release openings	H9999-456
94	Plug for fuel jettison pipe	H9920-260
95	Plug for engine nacelle blow-out connection	[illegible]69-90
96	Casing for rear folded-dipole antenna	H9999-150
	H. Armament Servicing Equipment	
97	Service ladder for special compartment of fuselage	H8412-10
98	Service ladder for tail gun mount	H9504-500
99	Ladder for special fuselage compartment	H8412-30
100	Dial and fixed index to read traverse of upper and belly gun turrets	H9981-580
101	Fixture for setting protractor when measuring safe ranges	H9981-680
102	Target for gun bore sighting (nose)	H9981-130
103	Target for gun bore sighting (side front)	H9981-131
104	Target for gun bore sighting (side rear)	H9981-132
105	Target for gun bore sighting (tail)	H9981-133
106	Fixture for levelling circular station mounting platform	H9981-710
107	Fixture for levelling strut station platform	H9981-700
108	Fixture for setting belly turret in horizontal position	H9981-600
109	Fixture for setting optical protractor on tail gun mount	[illegible]31-635
110	Hoist for belly gun mounts (Fig.24)	H9981-0
111	Slings for tail gun mount	H9980-0
112	Slings for upper gun mount	H9980-10
113	Slings for lifting and turning special belly mount	H9981-650
114	Ladder-crane for servicing upper gun mount (Fig.25)	H9981-200
115	Slings for armament	H9981-620
116	Bracket for unit C-13 (checking operation of system A)	

Notes: 1. Safeguard the measuring instruments and the hose of hydraulic test unit H9956-0 against gasoline, oil, dirt, and moisture. After work wipe the instruments with a clean cloth and keep them in a case.

2. Installation H9956-150 and test unit H9956-0 may be kept outside the building as they are furnished with protective casings.

[redacted]

50X1-HUM

3. Wing panel remover H9920-120 and bogey H9941-110 for installation an removal of the landing gear wheels may be kept outside the building. All other equipment designed for mounting and dismounting of aircraft individual units should be kept in container H9999-210.
4. The moving components of the equipment referred to in Section D of th list should be treated with [illegible]-201 lubricant at regular interva
5. The equipment listed in Section F must be stored in a container.

Chapter II

AIRCRAFT AIRFRAME, CARE AND MAINTENANCE

1. PREVENTION AND ELIMINATION OF CORROSION

When the aircraft is parked in the open for a long time, corrosion develops in the metal components of its structure due to atmospheric moisture, dust, and dirt.

Therefore, keeping the internal and external surfaces of metal components clean at all times, as well as timely removal of atmospheric moisture, is essential for protection of the aircraft against attacks of corrosion.

Proper maintenance prolongs the life of the aircraft and provides for preserving its flight characteristics.

The aircraft surfaces affected by exhaust gases, and the surfaces exposed to a temperature of over 100°C or contacting thermal insulation, as well as riveted and welded seams, joints, clearances, etc., should be constantly kept under close observation.

The structural components which are made of aluminum alloys and have no paint coating are usually protected by the anodic layer only; therefore, guarding of this layer against mechanical damage, dirt, and moisture is quite essential for prevention of corrosion.

Care of Aircraft Metal Surface

1. When parking the aircraft in the open, put on the covers for protection of metal surfaces against precipitation, icing, and mechanical damage.

2. If the aircraft is parked outside the hangar for long periods of time, subject the skin surfaces to thorough inspection twice a month in summer and once a month in winter, to see if there is any corrosion, and to take appropriate measures for its elimination.

3. Do not place metal objects, parts, and tools directly on the aircraft skin; see that no waste cotton or cloth soaked with oil or other chemical agents is left lying on the skin.

4. When working on the aircraft, use soft, clean mats, rubber mats, and soft footwear (rubber shoes with felt soles or other shoes having no metal nails in them) to guard the aircraft surface against mechanical damage; prior to entering the aircraft thoroughly clean the shoes of dirt.

Before putting the mats on the aircraft thoroughly clean them of sand and dirt.

5. Do not employ metal brushes or scrapers for cleaning the aircraft surfaces.

If an ice coating builds up on the aircraft surface, remove it by blowing the affected areas with hot air.

[redacted]

50X1-HUM

The temperature of the air used for removing ice from the surface of the pressurized cabins (Ф-2 and Ф-6) should not exceed 45°C; other surfaces may be blown with air at a temperature of not over 120°C.

6. After every flight, especially after a high-altitude flight, proceed a follows:

(a) open all hatches for airing the aircraft, and extend the wing flaps;

(b) remove oil stains, splashes, and soot by using clean cloth or waste co ton, soaked in clean gasoline Б-70 or in white spirit; then wipe the surface with clean waste cotton;

(c) remove dust and dirt from all accessible places by employing a vacuu cleaner or clean soft cloth slightly soaked in clean gasoline Б-70 or in whit spirit;

(d) use special care when wiping the aircraft surfaces exposed to exhaust gases with clean soft cloth soaked in clean gasoline Б-70 or white spirit. Th procedure should be carried out after each engine starting or running.

7. It is very important that no electrolyte should be spilt on the aircra metal surface; therefore exercise utmost care whenever removing storage batteri from or installing them in the aircraft; perform all operations pertaining to storage battery servicing outside the aircraft.

However, if some electrolyte does get on the metal surface, no matter whet painted or not, immediately wash the affected area with a jet of water, repeat the procedure many times, after which wipe the surface with clean dry waste cl or blow it with compressed air.

Keep the affected area under observation for a month and enter the result inspection in the aircraft Service Log.

Care of Individual Attachment Fittings

When proceeding in compliance with the Inspection Guide, do the following:

1. Inspect the coupling bolts in frames Nos 2, 12, 26, and 69, in the cent plane, detachable wing sections, and engine nacelles. For this, open the respect access panels or thermal insulation and check the bolts for damage and corrosio

2. Inspect the control links and cables in the fuselage and detachable win sections, opening the respective access panels for the purpose. Make sure the cables are free of broken strands and corrosion.

3. Check the durite hoses and their fastenings for condition. Multiple cra on the surface layer of the hoses are allowed.

4. Inspect the exposed surfaces of the rods incorporated in the landing ge and tail skid shock absorbers; inspect the surface of the rails, oxygen cylinde and oxygen installations. The chrome-plated surfaces of the rods and rails must always coated with petrolatum or other neutral lubricants (НК-30, НК-50, or ЦИАТИМ-201).

Lubricate these surfaces anew, if dry. Prior to flight remove lubricant fro the chrome-plated friction surfaces. Inspect the following surfaces having no protective coatings: the universal joint of the nose landing gear brace strut, t cheeks of the main strut rod, etc.; see that they are properly lubricated.

5. Inspect the water drain holes and clean them, if clogged.

Restoring Protective Coatings and Eliminating Corrosion

All operations pertaining to application of paint coatings may be best of all performed in hangars. In dry and calm weather the work may be carried out on the airfield in which case the ground around the aircraft should be watered and the aircraft itself should be placed in a dust-protected area. When applying paint coatings the air temperature should not be below +12°C.

When an atomizer is employed for painting individual components inside the aircraft, use sheets of cardboard, plywood, and paper, or pieces of cloth to safeguard other parts having intact coatings against paint sprays.

For more rapid drying of the protective coatings (primer, enamel) local heating may be resorted to. Local heating may be effected by the use of reflector lamps and heaters АПЛ-1 or МПЛ. The heaters should be provided with flexible hoses allowing supply of warm air to the areas in question. The air must be heated to a temperature of 50-60°C. In the pressurized cabins paint coatings should be dried by air heated to a temperature not exceeding 45°C.

Before use, the protective compounds are diluted to the required viscosity with the aid of a diluent in compliance with the data presented in Table 6.

Table 6

Data Pertaining to Viscosity of Protective Compounds
Diluted by Various Diluents

Nos	Name of protective compound	Name of diluent	Viscosity as measured by viscosimeter ВЗ-36 (nozzle No.2), sec.	
			for atomizer	for brush
1	2	3	4	5
1	Primer АЛГ-1	Gasoline Б-70 or white spirit	6 - 10	15 - 20
2	Primer АЛГ-7	1:1 mixture of xylene and white spirit, or xylene only	4 - 6	10 - 14
3	Primer АЛГ-8	Xylene	4 - 6	12 - 20
4	Enamel A-140	Gasoline Б-70	8 - 10	15 - 20
5	Enamel A-159	Gasoline Б-70	8 - 10	15 - 20
6	Enamel A-26М	Gasoline Б-70	8 - 10	15 - 20
7	Enamel ХВ-16	Р-5	3.5 - 4.5	5 - 10
8	Enamel ХВ-19	Р-5	3.5 - 4.5	5 - 10
9	Enamel A-67	Gasoline Б-70	8 - 10	15 - 20
10	Enamel "Муар-25"	White spirit	10 - 25	15 - 20

The viscosity of the protective compounds is determined with the aid of viscosimeter ВЗ-36. The viscosity of a compound is determined by the time period (sec.) during which 50 cu.cm. of the compound heated to a temperature of 20°C drain out of the funnel (nozzle No.2).

If viscosimeter ВЗ-36 is not available the viscosity of diluted protective compounds may be determined by the following method.

Employ a brush or an atomizer to apply a layer of protective compound onto a glass or metal strip, 10x15 cm. in size, set at an angle of 45°; then check to see whether the compound spreads on the surface evenly.

[redacted]

50X1-HUM

If no runs or beads are developed on the surface to which the protective compound has been applied, the viscosity of the compound may be considered adequate.

All materials employed for restoration of protective coatings and for removal of corrosion should comply with the Specifications.

The list of materials used for the purpose is given in Table 7.

Parts Made of Aluminum Alloys

In case corrosion (white powder) is detected on the internal framing components and on the inner side of the skin, treat the affected areas in the following manner:

1. Wipe the areas in question with waste cotton or cloth soaked in clean gasoline or white spirit.

2. Clean with hair, grass, or bristle brush. If traces of corrosion are still present after the above treatment, rub the surface with waste cloth soaked in gasoline and powdered with emery dust No.220.

3. Wipe the cleaned area first with waste cotton or clean cloth soaked in clean gasoline or white spirit, and then with clean dry waste cotton.

4. Apply a layer of primer АЛГ-1 or АЛГ-8 onto the cleaned surface, using an atomizer or a brush. The viscosity values of these primers, as measured by viscosimeter ВЗ-36 (nozzle No.2), should be as follows: for primer АЛГ-1 - 6 - 10 sec. and 15 - 20 sec. when applied with an atomizer and a brush respectively; for primer АЛГ-8 - 4 - 6 sec. and 12 - 20 sec. respectively.

5. Dry the АЛГ-8 primer coating for 5 hours at a temperature of 12 - 17°C; for 4 hours at a temperature of 18 - 27°C; or for 3 hours at 28 - 35°C.

Primer АЛГ-1 should be dried for 36 hours at a temperature of 12 - 17°C; for 24 hours at 18 - 35°C; or for 4 - 5 hours at 50 - 70°C.

6. Using an atomizer or a brush apply enamel A-150 to the primed surface if the part is accommodated in the pressurized cabins (compartments 0-2 and 4-6) or a layer of primer АЛГ-1 or АЛГ-8 containing 5 to 8 per cent aluminum powder, then dry the obtained coating. When drying primer АЛГ-1 or АЛГ-8 follow the directions of Point 5. Enamel A-150 should be dried for 36 hours at 12 - 17°C; for 24 hours at 18 - 27°C; or for 6 hours at 60 - 70°C.

CAUTION: Never use leaded gasoline for cleaning the area attacked by corrosion.

For restoring the 135-T varnish coating on the skin panels, treat the affected areas as follows:

1. Thoroughly rub the surface with bristle brushes amply treated with turpentine.

2. Wipe dry with clean cloth.

Table 7

Materials Used for Restoring Protective Coatings

Material	Grade	Colour	Viscosity as measured by viscosimeter ВЗ-36 or ВЗ-4, sec.			Drying time, hr			
			as delivered	for brush	for atomizer	at 12 - 17°C	at 18 - 35°C	at 60 - 70°C	at 90°C and over
1	2	3	4	5	6	7	8	9	10
Primer	АЛГ-1	Yellow	35 - 45	15 - 20	6 - 10	40	24	4	3
Same	АЛГ-8	Same	-	12 - 20	4 - 6	8	6	2	-
Enamel	A-140	Steel	20 - 31	15 - 20	8 - 12	30	22	4	-
Same	A-150	Dark green	20 - 31	15 - 20	8 - 12	30	22	4	-
Same	XB3-16	Gray	5 - 10	5 - 10	3.5 - 4.5	24	16	-	-
Same	XB3-19	Aluminum	4 - 10	5 - 10	3.5 - 4.5	24	16	-	-
Same	A-26M	Black	18 - 30	15 - 20	8 - 12	36	24	5	-
Same	A-67	Red	20 - 31	15 - 20	8 - 12	30	22	4	-
Varnish	135-T	Clear	-	-	13 - 15	-	2	4	-
Preparation	102-T	Same	-	-	-	-	-	-	-
Siccative	No.7640	Same	-	-	-	-	-	-	-
Gun grease	-	-	-	-	-	-	-	-	-
Petrolatum	-	-	-	-	-	-	-	-	-
Gasoline$^{x)}$	Б-70	Clear	-	-	-	-	-	-	-
Xylene$^{x)}$	-	Same	-	-	-	-	-	-	-
White spirit$^{x)}$	-	Same	-	-	-	-	-	-	-
Lubricant	ЦИАТИМ-201	White	-	-	-	-	-	-	-
Magnesium oxide	-	-	-	-	-	-	-	-	-
Chromic anhydride	-	Reddish-brown	-	-	-	-	-	-	-
Sulphuric acid	-	Clear	-	-	-	-	-	-	-

---

x) For diluting enamels and primers 1:1 mixtures of these compounds are used.

3. Using an atomizer apply two layers of varnish 135-T. Each of the varnish layers should be dried for 24 hours at a temperature of 12 - 35°C; for 18 hours at 36 - 50°C; or for 4 hours at 60 - 70°C.

<u>Note</u>: As a provisional measure, the part surfaces with damaged coatings may be protected against corrosion by treating them with petrolatum. The layer of petrolatum should be periodically renewed.

Petrolatum is removed with gasoline; primer and varnish are applied as directed above.

Varnish 135-T is prepared by mixing it with preparation 102-T, 39 gr of the preparation being added to each kg of the varnish. After adding preparation 102-T

[redacted]

50X1-HUM

thoroughly stir the mixture with an aluminum blade for 5 to 7 min., then add 13 gr of siccative No.7640 and stir the mixture again for 10 to 15 min.

Prior to adding preparation 102-T into varnish 135-T dilute it with the equal amount of xylene. In case preparation 102-T has thickened, heat it to a temperature of 40 to 50°C prior to adding it to the varnish.

CAUTION: 1. Varnish should be prepared just before being used, since the ready compound may be used for 4 hours only.

2. Prior to use filter the varnish through two layers of gauze.

3. Varnish should be prepared outside the building or in a vented cabinet; the man preparing the varnish should use helmet C-1 or a breathing mask and wear rubber gloves.

4. In case preparation 102-T gets on the skin, wash the affected place with 5 - 10 per cent solution of ammonia or rub it with a cotton wad soaked in acetone. Then wash the skin with warm water and soap.

Parts Made of Magnesium Alloys

In case corrosion is detected on the surface of the parts or skin panels fabricated of magnesium alloys, proceed as follows:

1. Remove corrosion products by cleaning the areas exceeding the affected spots by 5 to 10 mm to bright metal using a scraper or emery cloth.

2. Rub the cleaned area repeatedly with cloth or cotton waste soaked in clean gasoline Б-70 or in white spirit, then wipe it with dry clean cloth.

3. Treat the affected area with a solution of the following composition:

Magnesium oxide	8.9 gr
Chromic anhydride	45 gr
Sulphuric acid (sp.gr. 1.84)	0.6 - 1.0 cu.cm.
Water	1000 cu.cm.

Apply the solution with a cotton wad attached to a glass or wooden stick. Use a dry cotton wad to remove excess solution from the area not subject to the treatment.

Dry the part surface treated in the above manner for 30 min.

4. Employ an atomizer or a brush to coat the affected area with two layers of primer АЛГ-8 or АЛГ-1 containing 5 per cent aluminum powder ПАК-4 or ПАК-3.

Dry each layer of primer АЛГ-8 for 5 hours at a temperature of 12 - 17°C, or for 4 hours at 18 - 35°C; in the case of primer АЛГ-1 each of the layers should be dried for 48 hours at a temperature of 12 - 17°C, or for 36 hours at 18 - 35°C.

5. Using an atomizer or a brush apply a coat of coloured enamel to the affected area. Give the inner framing components and the inner side of the skin a coat of enamel A-150; apply a layer of enamel XB3-16 and a layer of enamel XB3-19 successively to the skin outside. Enamel A-150 on the inner framing components may be substituted by an enamel of a different colour (to match the colour of the component in question), such as black enamel A-26M, steel enamel A-140, red enamel A-67, etc.

6. Dry the XB3-16 enamel coat for 5 hours at a temperature of 12 - 17°C, or for 4 hours at 18 - 35°C; the drying time for enamel XB3-19 amounts to 12 hours and 8 hours at a temperature of 12 - 17°C and 18 - 35°C respectively; enamels A-140, A-150, A-26M, and A-67 require 48 hours for drying at a temperature of 12 - 17°C, or 36 hours at 18 - 35°C.

CAUTION: As in the case of aluminum alloy parts, it is strictly prohibited to employ leaded gasoline B-70 for surface cleaning purposes.

7. As a provisional measure, the areas with damaged coating may be protected against corrosion, especially in winter, when it is not possible to use varnishes in the open air, by coating the surface with a layer of gun grease heated to 60 - 100°C. Prior to giving the affected area a coat of varnish (when the ambient air temperature is not less than 12°C), the gun grease should be removed with gasoline, and primer and enamel applied as laid down in Points 4, 5, and 6.

8. The oxidizing solution is prepared as follows.

First mix magnesium oxide with a small amount of water in a beaker until a semiliquid consistency is obtained. Then add 400 to 500 cu.cm. of water and introduce chromic anhydride by small amounts in cold surroundings, stirring the mixture all the while. Keep stirring the mixture until the magnesium oxide is completely dissolved (until turbidity disappears). After this add the specified amount of water, sulphuric acid, and thoroughly stir the resulting mixture.

Notes: 1. The mixture should be kept in a closed glass vessel.
2. 100 cu.cm. of the solution are required for oxidizing 0.2 to 0.25 sq.m. area.

Parts Made of Ferrous Metals

If corrosion (rust) or damaged protective coating is detected on steel parts, exclusive of the parts having chrome plating, such as shock absorbers, landing gear, rails, etc., treat the affected areas in the following manner:

1. If the part is painted, first remove the paint coating from the affected area by rubbing it with cotton waste soaked in special remover СД.

2. Remove rust by using rigid hair, grass, or bristle brushes, or emery cloth No.170.

3. Rub the surface first with cloth or cotton waste soaked in clean gasoline Б-70, and then with clean dry cloth or cotton waste.

4. Apply a layer of primer АЛГ-8 or АЛГ-1 using a brush or an atomizer.

Dry the АЛГ-8 primer layer for 5 hours at a temperature of 12 - 17°C, or for 4 hours at 18 - 35°C; primer АЛГ-1 requires 48 hours at a temperature of 12 - 17°C, 36 hours at 18 - 35°C, or 5 to 6 hours at 70 - 60°C for drying.

5. Using a brush or an atomizer, apply a layer of coloured enamel to match the colour of the part in question (for instance, the colour of enamel A-140 matches the colour of the landing gear cylinder).

Then dry the enamel layer for 48 hours at a temperature of 12 - 17°C, for 36 hours at 18 - 35°C, or for 5 to 6 hours at 70 - 60°C.

CAUTION: When eliminating corrosion never use a file, remover РДВ, or leaded gasoline.

Whenever the landing gear shock absorbers get covered with a coat of reddish-brown rust, rub the affected area with clean cloth, soaked in gasoline Б-70, until the rust is removed. Then coat the affected area with dehydrated petrolatum. Keep the area under close observation.

If deep corrosion (in the form of black pits) develops on the landing gear shock absorbers, resulting in leakage of hydraulic fluid through the sealings, the shock absorbers and actuating cylinders should be replaced by new ones.

CAUTION: Never employ leaded gasoline for cleaning the affected areas.

[redacted]

50X1-HUM

Should corrosion be detected on the chrome-plated parts, perform the following operations:

(a) clean the affected area with emery powder No.200 - 220 applied to cloth or cotton waste soaked in gasoline B-70;

(b) rub the area with cloth or cotton waste soaked in gasoline B-70 and then with clean cloth or cotton waste;

(c) wipe the surface with cloth soaked in drying oil preheated to 50 - 60°C, or in oil MBП;

Then dry it for two hours at a temperature of not less than 12°C.

(d) rub the area with cloth soaked in gasoline until the drying oil film is completely removed. If the surface has been treated with oil MBП, remove the latter with dry cloth.

2. CARE OF GLASS PANELS

When the aircraft is parked on the airfield, the glass panels of the cabins should be fitted with covers for protection against the effect of the sun rays, atmospheric precipitation, as well as against mechanical damage and dirt. The covers should have clean soft flannel lining. Prior to putting covers on the glass panels do not fail to thoroughly clean their lining of dirt, dust, and sand.

The covers should be washed at regular intervals. When putting the covers on, take care to prevent the glass panels from being damaged by the metal fastenings and other parts. After rain the covers should be removed from the glass panels and dried.

When carrying out repairs on the aircraft:

(a) protect the organic glass panels by special casings or thick paper glued up with petrolatum;

(b) see that no solvents get on the organic glass (such as ethyl alcohol, remover PЖB, gasoline remover, etc.), which may cause dimming of the glass panels.

Throughout the entire service period of the aircraft make visual inspection of the glass panels on the inside and outside at the termination of each flying day. While doing so, check to see that the glass panels are clean and free of chips, cracks, or scratches. Direct special attention to condition of glass panels in side blisters where they curve from the flange to the sphere.

In case dirt gets on a glass panel, wash the latter with water (delivered from a watering pot or wrung out of wet cloth). After washing wipe the glass dry with clean cotton waste moving the latter in a circular manner and pressing slightly against the glass surface; after that air the glass until it is completely dried.

If the glass becomes grease-stained, rub it first with a dry cloth and then with paste BHAM-2.

In case paste BHAM-2 is not available, rub the glass with a cloth soaked in soapy water (3 to 5 per cent solution), and then with cloth soaked in clean water; finally, wipe the glass dry.

CAUTION: Never rub the panels of organic glass with paper or other rough or contaminated materials. Do not employ wool or silk fabrics either, as they tend to form static charges on the glass due to rubbing.

Deep scratches, chips, or cracks are the cause for replacement of the glass. The following defects on the organic glass panels are allowable:

(a) hair scratches;

(b) shallow scratches and notches not forming a net;

(c) minute surface cracks ("silver") in the form of interrupted chains not exceeding 60 mm in length, with individual cracks up to 6 mm in length. Not more than three chains are allowed on one glass panel.

Note: Defects listed in Item (c) are not allowed on the side blisters. A dimmed blister should be replaced.

Removal of deep scratches and "silver" from the surface of organic glass panels by means of emery cloth with subsequent polishing is not allowed, since such treatment will affect optical properties of the glass.

If numerous notches and hair scratches are developed, the organic glass should be polished with paste BHAM-2. Polish the glass manually, using a cotton wad, which should be first moved along the scratches, then across the scratches, and finally in a circular manner, applying slight pressure. Do not rub the glass for a long time on one particular area to avoid heating the surface.

CAUTION: 1. It is prohibited to use pastes other than specified.
2. Prior to polishing the glass check to see that its surface is clean and free of hard particles which may cause additional scratches and notches during polishing.

Every 50 flying hours, but not less than once every three months, perform routine inspection of the blisters; enter the results of inspections in the aircraft Service Log. Prior to inspecting the blister, remove its external fillet and the fairing.

Note: The rubber profile of the fairing and the fillet may cause a frosted strip and a depression on some sections or throughout the blister length.

Such defects on the blisters are allowed. They call neither for repair nor for measurement of the depression depth.

3. SPECIAL DIRECTIONS

When carrying out preflight and postflight inspections of the airframe, check on the following points (besides performing the operations prescribed in the Inspection Guide):

1. Condition of the rivets and screws in the vicinity of the upper gun mount. See that no rivets or screws are loose or missing.

2. Condition of the surface of the tubular control links where they run under the guide rollers. If the tube surface is found to be worn to a depth of 0.5 mm, turn the tube about its longitudinal axis through 180° to preclude further damage to the link.

3. Play in the hinged joints of the control links. If any play is detected in the above joints, replace worn hinge bolts by new ones.

4. Engagement of the hooks and supports of the mechanism jettisoning the navigator's hatch door (after every three flights). Inspection of hooks and supports should be made through the inspection ports located in the front section of the hatch door.

5. Reliability of the locking devices in the link joints and condition of the supporting rollers. Make sure that the link tubes are not worn under the guide rollers and that the link hinged joints are free of play. If a link is

[redacted]

50X1-HUM

found to be worn to a depth of 0.5 mm, turn it about the longitudinal axis throug 180°; replace hinge bolts, if play is detected in the hinged joints of the links.

6. After every three flights check the hooks and supports of the hatch door jettison mechanism for proper engagement. Engagement is considered to be correct, if the hook roller is properly seated in the support recess. The hooks and suppor are inspected through the ports located in the front section of the hatch door armoured wall.

Chapter III

EMERGENCY AND RESCUE APPLIANCES. CARE AND MAINTENANCE

1. EJECTION SEATS

Ejection seats enable the aircrew to abandon the aircraft in the air at any speed.

All the ejection seats are provided with safety devices which prevent ejection with the emergency hatches unjettisoned, with the seats in the intermediate positions and during parking.

To prevent ejection in the first two cases interlocking devices are fitted which are incorporated in the seats.

To prevent ejection in the third case (during parking) a ground safety device (a bolt with a tag) is provided. This device is removed prior to take-off and is mounted immediately after landing.

If employed correctly, the ejection seats are absolutely safe when working in cockpits on the ground, while in the case of emergency in the air they ensure safe bailing out for the crew.

Removal and Installation of Ejection Seats on Aircraft

During service it is necessary to remove periodically the ejection seats from the aircraft so as to replace the explosive charges and main springs of the ejection guns, to clean the ejection guns and perform other work.

To perform maintenance operations and care of the pilot's ejection gun remove only the movable (during ejection) part of the seat without the carriage and the armoured back plate.

For maintenance operations and care (charging, cleaning, etc.) of the ejection guns of the navigator's, navigator-radar operator's, radio operator's, and rear gunner's seats, remove the seats from the aircraft. Access to the ejection guns of the navigator's and navigator-radar operator's seats is ensured by removing the cover of the hatches on the seat movable frame.

On the radio operator's and rear gunner's seats the ejection guns are easily accessible.

[redacted]

Removal and Installation of Pilot's Ejection Seat Movable Part (without carriage and armoured back plate)

(Fig.26)

1. Remove cable 7 connecting the interlocking pin of the ejection gun to the canopy cover. For this disconnect the cable from the flexible pin locking the safety pin of the ejection gun (the flexible pin should be left in its place).

2. Remove the canopy cover.

3. Unscrew four bolts of bracket 9 securing the ejection gun to the armoured back plate.

4. Move the seat back as far as it will go and fix it in this position.

5. Connect the transverse member of the safety harness by the bottom of the seat and by means of a crane remove the movable part of the seat from the aircraft through the canopy hatch.

6. Unload ejection gun 5.

The installation of the ejection seat movable part on the aircraft is the reverse of the procedure described in Items 1 - 6.

After the movable part of the ejection seat has been installed, check the seat interlocking system. In the extreme rear position of the seat its locking pin must be depressed flush with the rail wing (Fig.27). In all intermediate positions when pulling the blind the locking pin should engage the cam on the axle of the blind drum over not less than 3 mm (Fig.28).

Removal and Installation of Pilot's Ejection Seat (with carriage and armoured back plate)

(See Fig.26)

1. Remove cable 7 connecting the interlocking pin of the ejection gun with the canopy cover. Disconnect the cable from the flexible pin locking the safety pin of the ejection gun leaving the pin in its place.

2. Remove the canopy cover.

3. Move the ejection seat to the extreme front position. Connect transverse member No. 2671 to the armoured back plate. Engage the hook of the crane cable (goose-neck crane No. 78967) in the transverse member and tighten up the cable.

4. Unscrew the rear bolts securing horizontal rail 12 (nearest to the aircraft centre line) guiding the carriage. Move the seat to the extreme rear position, then unscrew the front bolts securing this rail.

5. Slightly incline the seat in relation to the aircraft side and remove the rail from under the seat. Lower the seat and shift it to the aircraft centre line so that the rollers of the lower carriage get out of the second guide rail.

6. Lift the seat with the crane and remove it from the aircraft through the canopy hatch supporting it with both hands so that the seat does not touch the other parts.

7. Unload the ejection gun.

The installation of the seat on the aircraft is the reverse of the procedure described in Items 1 - 7.

Removal of Navigator's Seat from Aircraft

(Fig.29)

Before removing the seat from the aircraft:

(a) screw in the ground interlocking bolt which prevents accidental ejec-ion on the ground;

(b) disconnect the snap hook of cable 8 interlocking the ejection gun with he cover of the emergency hatch from the ear on the cover;

(c) remove the hatch cover.

To remove the seat from the aircraft:

1. Place the seat to the ejection position, setting it in the direction of light and moving it back as far as it will go.

2. Supporting the seat with both hands remove the quick-release bolt secur-ng the ejection gun to the fuselage bracket.

Carefully lower the seat along the guide rails supporting it with both ands and remove it from the aircraft through the emergency hatch. This opera-ion must be carried out by three men at least.

3. After the seat has been removed from the aircraft, unload its ejection un.

Installation of Navigator's Seat on Aircraft

(Fig.30)

1. Install device 7 on the bracket securing the ejection gun to the fuse-age frame.

2. Pass cable 6 of the winch through the roller and connect its free end o lock 5.

3. Pass the free end of cable 4 of the device through the hole in the up-er bracket of the seat sliding frame and connect it to lock 5.

4. Using winch 2 lift the seat along the guide rails to the position ermitted by the device.

5. Remove device 7 supporting the seat by hand.

6. Insert the quick-release bolt raising the seat until the holes in the racket match with those in the ejection gun.

Removal of Navigator-Radar Operator's Ejection Seat from Aircraft

(See Fig.31)

Prior to removing the seat from the aircraft do as follows:

(a) screw in the ground interlocking bolt of the ejection gun;

(b) disconnect the snap hook of the cable interlocking the ejection gun ith the hatch cover from the cover eye;

(c) remove the hatch cover.

To remove the seat from the aircraft:

1. Secure the seat to the bracket on the sliding frame by means of the stop n its backrest.

2. When on the seat, open the valve mounted at the bottom of frame No.12 nd lower the seat to the extreme lower position.

3. Remove the quick-release bolt supporting the seat with the hands from

[redacted]

50X1-HUM

below. Carefully lower the seat onto the guide rails and remove it from the aircraft through the entrance hatch. This operation requires four men at lea

4. Unload the ejection gun.

Installation of Navigator-Radar Operator's Seat on Aircraft

(See Fig.30)

1. Mount device 11 on the seat sliding carriage.

2. Pass cable 6 of the winch through the roller and connect its free e to lock 5.

3. Pass the free end of device cable 4 under the seat and connect it wi lock 5.

4. Using winch 2 lift the seat along the guide rails to the position p mitted by the device.

5. Remove the device supporting the seat by hand.

6. Insert the quick-release bolt lifting the seat until the holes in th sliding carriage match with those in the ejection gun.

Removal from and Installation of Radio Operator's and Rear Gunner's Seats on Aircraft

(Figs 32 and 33)

The seats of the radio operator and of the rear gunner are installed o the aircraft and removed from it in the same manner as the navigator's seat.

When installing the seats, pass the cable of the lifting device under t lower brackets of its headrest.

Loading and Unloading Ejection Guns

Loading and unloading, as well as other maintenance operations, should carried out outside the aircraft.

All the seats are provided with the system interlocking the ejection gu with the hatch covers, therefore, prior to removing the seats from the airc it is necessary to disconnect this system and only after this remove the se

For this purpose disconnect the snap hook joining the interlocking cabl to the eye on the hatch cover, leave the hatch cover interlocking pin in its place and secure the cable in position on the seat so as to avoid accidental pulling out of the pin.

When removing the seat from the aircraft, the ground interlocking bolt be screwed in its place.

Loading and unloading the ejection guns must be performed far from the aircraft in a specially prepared place by specially trained personnel.

When carrying out maintenance operations, the seats should be placed o stand constructed in the form of guide rails so that the ejection gun is in vertical position.

CAUTION: When unloading and loading ejection guns, observe the followin rules:

(a) carry out the work only in a special room or in a place int ed for this purpose on a special device;

(b) the seats must be fixed in position on the device;

(c) the operations should be performed by personnel specially trained for work with ejection seats; presence of unauthorized persons is prohibited;

(d) the operator carrying out the work should occupy a position at the side of the seat at all times.

Loading and Unloading Ejection Guns of Seats Ejected Downward from Aircraft

(Fig.34)

The ejection guns of the seats ejected downward should be loaded and unloaded outside the aircraft on the seats removed from it.

The ejection guns of these seats should be unloaded in the following order:

1. Remove the piston locking together with the ejection gun head.

2. Open the ball lock for which purpose press its piston to the extreme upper position lifting it by the splint pin in the end piece (Fig.35).

<u>Note</u>: Prior to opening the ball lock of the ejection guns in the navigator's and navigator-radar operator's seats, remove the covers of the hatches located on the sliding frames from the rear.

3. Move the outer cylinder upward by 200 or 300 mm.

4. Using special wrench 6 (Fig.36) unscrew the piston from the head and raise it (Fig.37). The explosive charge will remain in the ejection gun head.

In all ejection seats the piston is turned off counter-clockwise.

5. Remove the explosive charge from the seat of the ejection gun head and put it into a special box with sockets for storage of explosive charges.

Loading and Unloading Ejection Guns of Seats Ejected Upward from Aircraft

(Fig.38)

The ejection guns of the seats ejected upward should be loaded as follows:

1. Loosen lock nut 10 and unscrew union nut 11.

This done, detach the firing mechanism on which safety pin 5 should be mounted, locked, and sealed.

<u>Note</u>: If arming pin 6 was not mounted, after the firing mechanism has been removed, press off striker 3 by a metal pin with a diameter not in excess of 6 mm through hole 1 and insert the arming pin into the port of the rod of striker 3. Mounting the arming pin is shown in Fig.39.

2. Connect the explosive charge (ПК7-Т) with the firing mechanism for which purpose turn the firing mechanism with the firing pins upward.

The lower end face of the explosive charge indicator must be depressed flush with the firing mechanism plane. The red bush of the indicator must project by 5 mm beyond the firing mechanism head surface.

[redacted]

50X1-HUM

3. Insert the locking pin of the firing mechanism into the socket of the bottom of the explosive charge case and by turning the explosive charge insert the flange of its case into the grooves of the firing mechanism lugs as shown in Fig.40.

4. Insert the explosive charge into inner cylinder 22 (See Fig.38) of the ejection gun and mount the firing mechanism so that its lugs enter the special splines in the inner cylinder. Mounting the firing mechanism is shown in Fig.41.

5. By means of union nut 11 and the lock nut tightly connect the firing mechanism with inner cylinder 22 (See Fig.38).

6. Connect the ejection control wiring to arming pin 6 and the cable interlocking the ejection gun with the canopy cover to the tab of safety pin 5.

Unloading the ejection gun is the reverse of the procedure described in Items 1 - 6.

The presence of the explosive charge is checked as indicated in Fig.42. If the ejection gun is loaded, the indicator bush is not depressed and project from the firing mechanism body approximately by 5 mm.

CAUTION: It is strictly prohibited to carry out any work on the ejection gun without the safety pin fitted in the firing mechanism, locked, and sealed.

Operating Instructions for Ejection Guns and Seats

In view of the fact that ejection seats are very important as a means of rescue of the aircrew in case of emergency, it is necessary to regularly check the condition of their most vital units and mechanisms and carry out the followi instructions:

1. Each time after installation of the seat on the aircraft screw into the ejection lever system the ground interlocking bolt (a bolt with a tab) which prevents accidental ejection on the ground.

Before flight these bolts should be unscrewed by the mechanic responsible for ejection seats.

After the aircraft has landed and the aircrew has left the aircraft, the mechanic responsible for ejection seats should enter the aircraft first and screw the ground interlocking bolts on each seat.

Only after this has been done are the rest of the technicians permitted to enter the aircraft.

Note: The ground interlocking bolts of the seats should be unscrewed from the ejection lever system only before taxiing for the start after the crew members take their seats.

2. When pulling out the shoulder straps, it is necessary to pull at both straps simultaneously.

3. Take care that the strap adjusting mechanism does not pull in the shoulder straps sharply.

4. When throwing back the back plate on the seats of the navigator, navigator-radar operator, radio operator, and rear gunner, first release the shoulder strap adjusting mechanism or pull out the straps.

5. Each time after installation of the seats on the aircraft connect the cables joining the pins of the ejection guns with the covers of the hatches or

of the canopy. Check the interlocking pin for correct mounting and reliable operation by jettisoning the hatch and canopy covers three times.

On the seats of the navigator, navigator-radar operator, and pilots jettisoning the hatch covers and the canopy should be checked three times from the air system and three times mechanically.

The results of checking should be entered into the aircraft Service Log.

6. The safety harness and foot clamps automatic unlock mechanism АД-3 should be cocked for 1.5-sec. operation.

If the aircraft is not to fly for more than one month, release the power springs of the automatic unlock mechanism. For this purpose remove the flexible pin, thereby enabling the mechanism to operate.

7. The free end of the АД-3 mechanism cord should be secured to the aircraft frame.

8. To ensure reliability of the ejection gun operation, it is necessary to clean and lubricate it regularly, as well as to replace the main spring and the explosive charge.

To clean ejection guns remove them from the seats and disassemble.

Disassembly and Assembly of Ejection Gun of Seat Ejected Upward from Aircraft

Before beginning the work, make sure that the ground interlocking bolt and the pin interlocking the ejection gun with the canopy cover are fitted in position.

To remove the ejection gun from the seat, do as follows:

1. Remove the seat without the carriage and the armoured back plate.
2. Unload the ejection gun.
3. Remove the ejection gun from the seat disconnecting the upper journal attachment bolts.

The ejection gun should be disassembled as follows:

1. Remove the inner cylinder by pressing off the ball lock piston with a cleaning rod (from the side of the cartridge chamber) or by pulling it from the outside with a hook secured to the tail piece.
2. Unscrew the shock absorber sleeve loosening the stop screw for the purpose and detach it from the outer cylinder together with the mid cylinder.
3. Detach the shock absorber sleeve from the mid cylinder and remove the bush with the rubber shock absorber from the sleeve.
4. Unscrew the ball lock body loosening for this its lock nut and detach it from the outer cylinder. Check whether the paronite gasket is intact.
5. Disassemble the firing mechanism. For this:
   (a) remove the safety pin and the arming pin;
   (b) unscrew the four attachment screws of the firing mechanism head;
   (c) using a drift drive the rod of the explosive charge indicator out of the lower bush;
   (d) detach the firing mechanism head from the body, remove the striker and the main spring.
6. Disassemble the ball lock. For this press off the piston, drive the dowel out of the tail piece and detach the lock parts. Check whether the aluminum gasket is present and in good repair.
7. Clean all the parts of the ejection gun from the old lubricant. Clean the cylinders by means of a sponge.
8. Check all the parts of the ejection gun by subjecting them to a thorough outside inspection.

[redacted]

50X1-HUM

Note: On detecting damage in one of the cylinders replace the entire ejection gun.

9. Apply a thin layer of the ЦИАТИМ-201 lubricant to all the friction surfaces of the ejection gun parts and to the springs of the firing mechanism and the ball lock.

CAUTION: Excessive lubrication of the parts may cause failure of the ejection gun.

Assembly of the ejection gun is the reverse of the procedure described in Items 1 – 6.

Notes: 1. Use a special mandrel for convenience of assembly of the sleeve with the mid cylinder.
2. To assemble the sleeve with the mid cylinder:
(a) mount a spring seal in the sleeve and straighten it out in the groove by inserting a mandrel into the sleeve from above;
(b) connect the upper end of the mid cylinder with the bush and the rubber shock absorber fitted on it flush with the mandrel;
(c) move the sleeve with the spring seal over the mid cylinder and detach the mandrel.
3. The accessories for cleaning and the tools for disassembly and assembly of the ejection gun are shown in Fig.36.
4. The data concerning inspections, disassembly and assembly, cleaning, firing, replacement of explosive charges and other maintenance operations must be entered in the Certificate of the ejection gun along with the date of the fulfilment of the work and the name of the person who performed the operation. The entry should be signed by the operator.

Disassembly and Assembly of Ejection Gun of Seat Ejected Downward from Aircraft

Prior to disassembly of the ejection gun make sure that the ground interlocking bolt and the pin interlocking the seat with the hatch cover are fitted in position.

To remove the ejection gun from the seat, proceed as follows:

1. Remove the seat from the aircraft.
2. Unload the ejection gun.
3. Throw back the safety handle on the seat and by pressing the arming handle pull out the arming pins of the ejection gun.
4. Disconnect the bolts securing the journals on the firing head and remove the ejection gun from the seat.

Disassemble the ejection gun as follows:

1. Remove the outer cylinder.
2. Unscrew the upper unit securing the ejection gun to the fuselage frame having loosened the lock nut.
3. Remove the splint pins from the striker roller mounting spindles and remove the rollers.
4. Turn out the screws securing the lower cover of the firing head and remove it.
5. Remove the strikers and the main springs.
6. Clean all the parts of the ejection gun from the old lubricant.

Clean cylinders with the aid of sponges.

7. Check all the parts of the ejection gun for serviceability by thorough outward inspection.

Note: On detecting damage in one of the cylinders, replace the entire ejection gun.

8. Apply a thin layer of the ЦИАТИМ-201 lubricant to all the friction surfaces of the ejection gun parts, main springs, and the ball lock spring.

CAUTION: Excessive lubrication of the parts may cause failure of the ejection gun.

Assembly of the ejection gun is the reverse of the procedure described in Items 1 - 5.

Notes: 1. Use special wrench 4 for mounting arming pins (See Fig.36).
2. The data concerning inspections, cleaning, firing, replacement of explosive charges and other maintenance operations must be entered in the ejection gun Certificate along with the date of the fulfilment of the work and the name of the person who carried out the operation. The entry should be signed by the operator.

Checking Operation of Ejection Guns after Assembly

Each time after assembly of the ejection gun it is necessary to:

1. Check by hand mutual displacement of the cylinders until the closing of the ball lock. The cylinders must move smoothly without jamming.
2. Check the ball lock for reliable closing by pulling out the inner cylinder with an effort of 20 to 30 kg and by turning it round.
3. Load the ejection gun with an inert-loaded cartridge or with a dummy primer (explosive charge bottom part).
4. Install the ejection gun on the seat and check the operation of the ejection system and of the ejection gun by firing the inert-loaded cartridge or the dummy primer three times. During each check both primers should be broken but not pierced through.

In case the ejection gun fails once at least, disassemble the firing head (firing mechanism), examine its parts paying special attention to the striker and the main spring, check the strikers for protrusion and test the ejection gun again by firing it six times.

If during this test the ejection gun fails again, replace the main spring and fire the inert-loaded cartridge three times.

After firing clean the parts of the ejection gun from carbon deposit and cover them with a thin layer of the ЦИАТИМ-201 lubricant.

Notes: 1. When checking the ejection gun, measure the protrusion of the striker beyond the surface of the firing head. The strikers must project:
(a) by 1.9 ± 0.1 mm in the ejection guns of the seats ejected from the aircraft downward;

[redacted]

50X1-HUM

Note: On detecting damage in one of the cylinders replace the entire ejection gun.

9. Apply a thin layer of the ЦИАТИМ-201 lubricant to all the friction surfaces of the ejection gun parts and to the springs of the firing mechanism and the ball lock.

CAUTION: Excessive lubrication of the parts may cause failure of the ejection gun.

Assembly of the ejection gun is the reverse of the procedure described in Items 1 - 6.

Notes: 1. Use a special mandrel for convenience of assembly of the sleeve with the mid cylinder.
2. To assemble the sleeve with the mid cylinder:
(a) mount a spring seal in the sleeve and straighten it out in the groove by inserting a mandrel into the sleeve from above;
(b) connect the upper end of the mid cylinder with the bush and the rubber shock absorber fitted on it flush with the mandrel;
(c) move the sleeve with the spring seal over the mid cylinder and detach the mandrel.
3. The accessories for cleaning and the tools for disassembly and assembly of the ejection gun are shown in Fig.36.
4. The data concerning inspections, disassembly and assembly, cleaning, firing, replacement of explosive charges and other maintenance operations must be entered in the Certificate of the ejection gun along with the date of the fulfilment of the work and the name of the person who performed the operation. The entry should be signed by the operator.

Disassembly and Assembly of Ejection Gun of Seat Ejected Downward from Aircraft

Prior to disassembly of the ejection gun make sure that the ground interlocking bolt and the pin interlocking the seat with the hatch cover are fitted in position.

To remove the ejection gun from the seat, proceed as follows:

1. Remove the seat from the aircraft.

2. Unload the ejection gun.

3. Throw back the safety handle on the seat and by pressing the arming handle pull out the arming pins of the ejection gun.

4. Disconnect the bolts securing the journals on the firing head and remove the ejection gun from the seat.

Disassemble the ejection gun as follows:

1. Remove the outer cylinder.

2. Unscrew the upper unit securing the ejection gun to the fuselage frame having loosened the lock nut.

3. Remove the splint pins from the striker roller mounting spindles and remove the rollers.

4. Turn out the screws securing the lower cover of the firing head and remove it.

5. Remove the strikers and the main springs.

6. Clean all the parts of the ejection gun from the old lubricant.

Clean cylinders with the aid of sponges.

7. Check all the parts of the ejection gun for serviceability by thorough outward inspection.

Note: On detecting damage in one of the cylinders, replace the entire ejection gun.

8. Apply a thin layer of the ЦИАТИМ-201 lubricant to all the friction surfaces of the ejection gun parts, main springs, and the ball lock spring.

CAUTION: Excessive lubrication of the parts may cause failure of the ejection gun.

Assembly of the ejection gun is the reverse of the procedure described in Items 1 - 5.

Notes: 1. Use special wrench 4 for mounting arming pins (See Fig.36).
2. The data concerning inspections, cleaning, firing, replacement of explosive charges and other maintenance operations must be entered in the ejection gun Certificate along with the date of the fulfilment of the work and the name of the person who carried out the operation. The entry should be signed by the operator.

Checking Operation of Ejection Guns after Assembly

Each time after assembly of the ejection gun it is necessary to:

1. Check by hand mutual displacement of the cylinders until the closing of the ball lock. The cylinders must move smoothly without jamming.

2. Check the ball lock for reliable closing by pulling out the inner cylinder with an effort of 20 to 30 kg and by turning it round.

3. Load the ejection gun with an inert-loaded cartridge or with a dummy primer (explosive charge bottom part).

4. Install the ejection gun on the seat and check the operation of the ejection system and of the ejection gun by firing the inert-loaded cartridge or the dummy primer three times. During each check both primers should be broken but not pierced through.

In case the ejection gun fails once at least, disassemble the firing head (firing mechanism), examine its parts paying special attention to the striker and the main spring, check the strikers for protrusion and test the ejection gun again by firing it six times.

If during this test the ejection gun fails again, replace the main spring and fire the inert-loaded cartridge three times.

After firing clean the parts of the ejection gun from carbon deposit and cover them with a thin layer of the ЦИАТИМ-201 lubricant.

Notes: 1. When checking the ejection gun, measure the protrusion of the striker beyond the surface of the firing head. The strikers must project:
(a) by 1.9 ± 0.1 mm in the ejection guns of the seats ejected from the aircraft downward;

[redacted]

(b) by 1.4 to 1.8 mm in the ejection guns of the seats ejected from the aircraft upward.

2. Measure the striker protrusion by means of a vernier caliper. In case the striker protrusion is less than required which may occur when foreign matter gets between the striker flange and the head body, it is necessary to disassemble the firing head and clean its parts.

3. To remove the fired case of the explosive charge from the ejection gun of the seat ejected from the aircraft upward, press off the striker upward with a screw driver and insert the arming pin in position.

Charging Actuating Cylinder of Navigator-Radar Operator's Ejection Seat

(Figs 43 and 44)

During service hydraulic fluid may leak out of the actuating cylinder of the navigator-radar operator's seat and out of its hydraulic lock. The amount of hydraulic fluid required for normal operation of the actuating cylinder is determined by the distance between the bottom of the compensating cylinder piston and the top of the hydraulic lock. This distance is equal to 229.5 ± 0.5 mm at 15°C.

In the event of slight leakage (the reference size of 229.5 mm is somewhat increased) charge the hydraulic cylinder as prescribed in Items 6 and 7.

The actuating cylinder should be charged with the AMT-10 hydraulic fluid on a stand, the key diagram of which is shown in Fig.45 in the following manner (See Fig.43):

1. Instead of plugs 4 screw in special adapters. Deliver hydraulic fluid at a pressure of 20 to 30 kg per sq. cm. from the stand into hydraulic lock angle 9 and pump it through both adapters in turn completely extending and retracting the rod of the actuating cylinder.

Release pressure from the angle.

2. Mount the actuating cylinder with the rod upward and by delivering the hydraulic fluid through the adapter completely extend the rod of the actuating cylinder.

3. Turn the actuating cylinder over with the rod down and by delivering the hydraulic fluid to the cylinder through the other adapter completely retract the rod of the actuating cylinder.

4. Repeat the cycles of pumping the hydraulic fluid through the actuating cylinder until air is completely evacuated from both cavities of the cylinder. This done, screw plugs 4 in position without tightening them up.

5. Mount the actuating cylinder with the charging connection upward and deliver hydraulic fluid under a pressure of not more than 15 kg per sq. cm. into it through the charging connection of the hydraulic lock until air is completely evacuated from the cylinder through plugs 4.

6. Tighten up plugs 4 and holding the rod of the actuating cylinder in a completely retracted position, fill the compensating cylinder of the hydraulic lock with hydraulic fluid to full capacity delivering it through the charging connection.

7. Set the required distance between the bottom of the compensating cylinder piston and the hydraulic lock top with the rod of the actuating cylinder completely retracted. For this purpose mount the actuating cylinder with the charging

connection downward and pressing the charging connection valve, let out the excessive amount of hydraulic fluid.

<u>Note</u>: With every increase or decrease of temperature by 6°C the reference distance of 229.5 ± 0.5 mm increases or decreases respectively by 1 mm approximately.

After charging and mounting the navigator-radar operator's seat actuating cylinder on the aircraft, check it for proper functioning and adjust the rate of lifting and lowering of the seat. For this purpose build up a pressure of 150 kg per sq. cm. in the air system and three times lift and lower the seat.

During the check the ejection seat must move up and down smoothly without jerks and jamming. The seat movement must cease on setting the handle of the air cock to the neutral position.

The time required for lifting and lowering the seat with a man on it must be equal to 2 or 5 seconds and is regulated by throttle needles 10. When screwing out the needle, the time decreases, and vice versa.

The locks opening the way to oil in the hydraulic lock open before the lift cavity of the actuating cylinder is filled with air at a pressure which can balance the weight of the seat with the man sitting on it. Therefore, when the seat is rising from an intermediate position, it may first lower to 30 mm for a short time.

Storage of Live Explosive Charges

When storing and handling live explosive charges, follow the rules:

1. Live explosive charges should be stored at depots in a clean dry room in tightly closed boxes with recesses for each explosive charge.

2. It is strictly prohibited to file the explosive charge cases, to rub the explosive charge primer and strike the case.

3. The explosive charge cases must have no outside defects: dents, scratches, scores, traces of corrosion, etc. It is strictly prohibited to use explosive charges with such defects and explosive charges which have been exposed to rain.

4. Explosive charges are issued only to persons who are specially authorized to attend to ejection seats and who must sign for the explosive charges issued to them in a special acceptance register.

Storing explosive charges in the aircraft at the crew working places is strictly prohibited.

2. EMERGENCY ESCAPE AND ENTRANCE HATCHES

Jettisoning Emergency Escape Hatch Covers from Aircraft by Mechanical System

When removing the ejection seats from the aircraft prior to jettisoning the hatch covers, make sure that the ground interlocking bolt of the seat is fitted in position, the pin interlocking the ejection gun with the hatch cover is mounted on the seat and is connected to the hatch cover by means of a cable.

Prior to checking the hatch cover jettisoning mechanism (remover), pressurize the hatches as follows:

(a) open the reducing valve on the pressurization system panel.

Air pressure in the system should be $4^{-0.2}_{+0.5}$ kg per sq. cm. as indicated by the low-pressure gauge;

(b) open the cock for air supply to the hatch pressurization bosses.

[redacted]

50X1-HUM

When jettisoning the hatch covers only for the purpose of the removal of ejection seats from the aircraft, the hatches are not to be pressurized.

To protect the hatch covers from damage when checking the mechanical and air systems, the covers should be jettisoned on a net or a tarpaulin panel stretched over the frame of a special cart.

To jettison the fuselage hatch covers from the aircraft by means of the mechanical system, carry out the following operations:

1. Disconnect the snap hook of the ejection gun interlocking cable from the eyelet on the hatch cover; the pin of the interlocking device should remain in its place.

2. Set the ejection seat to the position for ejection.

3. Remove the safety device from the hatch cover remover handle.

4. Command CLEAR HATCHES and on receiving the answer HATCHES CLEARED press the remover handle. The hatch cover jettisoned, the air from the pressurisation hose must be let out into the atmosphere. The cover must fall out of the hatch without jamming under the action of its own weight.

Check jettisoning the pilots' canopy covers from the mechanical system in the following manner:

1. Disconnect the snap hook of the ejection gun interlocking cable from the eyelet on the cover.

2. Press down the canopy cover jettison handle.

3. By slightly tapping on the cover from the inside of the cockpit knock it out of the canopy hatch edging.

Notes: 1. When checking the jettisoning of the pilots' canopy covers, two persons should be outside the cockpit (one should be on a ladd the other - on the fuselage) to support the cover and remove it from the canopy.

2. The covers of the emergency escape (entrance) hatches in the fuselage and on the pilots' canopy should be jettisoned by sm applying an effort of not more than 20 kg to the handle on an a equalling two thirds of the handle length (from its axis of rotation). The effort applied to the handle to jettison the rear gunner's hatch cover should not exceed 30 kg.

Mounting Navigator's Emergency Escape Hatch Cover

(Fig.46)

Prior to mounting the navigator's hatch cover on the aircraft, it is necessary to open the hatch on the cover skin and by turning lever 6 as indicated by the arrow to disengage front hooks 11 from stops 10.

To mount the hatch cover, perform the following operations:

1. Wipe the pressurisation hose with talcum powder and place it into the groove of the hatch edging.

2. Engage the rear dowels of the cover in the respective sockets on the hatch edging.

3. Close the cover raising it by the front rib. In the closed position the cover should enter the hatch flush with the outside contour of the aircraft, the pin of bell crank 5 should enter the slit of mechanical system lever 6. Then press down handle 2 to the jettisoning position. At this movement of handle 2 lever 6 will turn in the direction of the arrow shown in Fig.46.

4. Through the hatch on the cover skin raise the transverse member connecting hooks 11 with each other and engage the hooks in the stops on the hatch edging.

Raise the transverse member with a wooden support so as not to damage its protective coating.

5. Move handle 2 to the upper position corresponding to cover closing and move stops 10 located on one common axle 9 close under the rollers mounted on the hook tail pieces. Bell cranks 16 must thrust against the stop on the cover and lock the mechanism in the fixed position. The position of the hinge should be checked from the inside of the cockpit.

6. Check the hatch cover for proper installation by the notches on lever 6 and on the bracket securing it to the cover.

If the hatch cover is mounted correctly, these notches should match.

7. Close the hatch on the cover skin.

Mounting Cover of Pilots' Canopy Emergency Escape Hatch

(Fig.47)

To mount the cover of the pilots' canopy hatch, perform the following operations:

1. Wipe the pressurisation hose with talcum powder and place it into groove of the hatch edging.

2. Move handle 3 to the lower position.

3. Mount the cover on the dowels of stops 26 and press the cover to the hatch edging; the dowels must enter the holes of brackets 25.

4. Turn clamps 12 so that their holes match the holes in supporting brackets 10. The ends of clamps 12 must enter the holes of bearing plates 13.

5. Move handle 3 to the upper position supporting clamps 12. Front stops 11 will fix clamps 12 in position.

6. Raise hooks 17 so that their holes line up with dowels 19 which must be previously engaged in shackles 16. Then, pressing the cover from top in its mid part pull out stop 24. At this moment under the action of spring 21 lock dowels 19 enter the holes of hooks 17.

Mounting Cover of Navigator-Radar Operator's Emergency Escape Hatch

(Fig.48)

Prior to mounting the cover of the navigator-radar operator's hatch:

1. Open the hatch on the hatch cover skin.

2. Release hooks 14 from stops 16 by moving rod 8 in the direction of the arrow shown in Fig.48.

3. Move handle 1 upward to the cover jettison position.

4. Wipe the pressurisation hose with talcum powder and place it into the hatch edging groove.

To mount the hatch cover, perform the following operations:

1. Move fixed stops 12 of the hatch cover under stops 13 on its edging. The pin of rods 8 must enter the open slit of lever 17.

2. Turn handle 7 so as to withdraw rear dowels 18 into the cover.

3. Through the hatch on the cover skin raise transverse member 15 connecting hooks 14 with each other and fix the hooks by stops 13.

[redacted]

50X1-HUM

Raise the transverse member by means of a wooden support so as not to damage its protective coating.

4. Move handle 1 to the lower closed position and move stops 16 under the rollers of hooks 14 connecting at the same time the shackle of the winch cable to the dowel of mechanism 5.

The lever of bell crank 10 must assume the fixed (dead) position which should be checked from the inside of the cockpit.

Close handle 7; dowels 18 will enter their recesses on the hatch edging and the cover must close flush with the aircraft skin.

5. Check the hatch cover for proper mounting by the notches on bell crank 10 and lever 9.

6. Close the hatch on the cover skin.

7. Open the hatch. Check to see that the hatch cover in the open position does not thrust with its front edge against the fuselage skin which is ensured by adjusting the length of cable 4 of winch 2.

Mounting Covers of Emergency Escape Hatches of Gunner-Radio Operator and Rear Gunner

(Figs 49 and 50)

Prior to mounting the covers of the emergency escape hatches of the gunner-radio operator and the rear gunner on the aircraft, open the hatches for access to the mechanical systems.

The covers of the emergency escape hatches of the rear pressurized cockpit are mounted in the same manner as the covers of the navigator's and navigator-radar operator's emergency escape hatches.

After the covers have been mounted on the aircraft, check them for correct and reliable locking by their locks. For this, by means of a wrench turn the pivot of the bell cranks with hooks for stopping the engaged parts. If the stop is in the correct position, red levers 9 (See Fig.49) and 6 (See Fig.50) designed for locking the engaged parts will thrust against the cover plane. This done, seal the guide.

Entrance Hatches

The entrance hatches open against the air stream from the cockpit and from the outside of the aircraft by means of handles. The handle for opening the hatch from the cockpit is located on the top of the cover, while that for opening the entrance hatch from the outside is depressed in the cover flush with its skin.

In the open position the entrance hatch cover of the rear pressurized cockpit is held by a duralumin plate which is folded when the hatch closes.

The entrance hatch of the front pressurised cockpit is held open by the winch cable. After the hatch has been closed by the winch, it is necessary to unlock the winch drum so that when jettisoning the hatch cover, the winch cable is tensioned.

Instructions on Care and Maintenance of Entrance and Emergency Escape Hatch Covers

During service perform care and maintenance operations as follows:

1. Apply periodically the ЦИАТИМ-201 lubricant to the locks, hinges, friction surfaces of pivots, and sealed connections.

Remove the old lubricant with gasoline and apply fresh lubricant.

2. Wipe the pressurization hoses with talcum powder and place them correctly into the hatch edging grooves so that the hose is not jammed when the doors and covers are closed.

3. Each time after closing the entrance hatch of the front pressurized cockpit unlock the winch drum.

4. The hatch door jettison handles of the mechanical and air systems must be locked and sealed at all times.

The handles of the air system cocks of all hatch covers and the handles of the mechanical system of jettisoning the pilots' canopy covers and the gunner-radio operator's hatch cover should be locked with soft steel wire, 0.5 mm in diameter.

The handles of the mechanical system of the navigator's, navigator-radar operator's, and rear gunner's hatch covers should be locked with copper wire, 0.3 mm in diameter.

3. LIFE BOATS, TYPE ЛАС-5М

General

Pneumatic life boats, type ЛАС-5М, are group means of rescuing the aircrew used in case the aircraft alights in water.

The aircraft is provided with two life boats placed in special containers on the port side (Fig.51). One of the life boats in the container located between frames Nos 12 and 15 is intended for the aircrew members of the front cockpit; the other life boat located in the container between frames Nos 62 and 63 is intended for the aircrew members of the rear cockpit.

Each life boat is designed to accommodate five men.

Specifications and Complete Set of ЛАС-5М Life Boat

1. Overall dimensions of the life boat with the sail installed on it:	
(a) length	290 ± 5 cm.
(b) width	140 ± 3 cm.
(c) height (complete)	239 cm.
(d) draft (keel included)	70 cm.
2. Life boat load-carrying capacity	500 kg
3. Weight of life boat fully equipped	30 kg
4. Life boat side compartments charger	carbon dioxide delivered from boat cylinder
5. Amount of dehydrated carbon dioxide for charging boat cylinder:	
(a) in summer	1350 gr
(b) in winter	1600 gr
6. Life boat speed when oar-driven (in the calm)	3 km/hr
7. Life boat speed under sail (depending on wind velocity)	4 to 12 km/hr
8. Maximum permissible wind velocity with life boat going under sail	13 km/hr
9. Life boat set includes (amount in pieces):	
(a) sail	1
(b) oars with rubber rings	3
(c) extension for mast with rigging (of two parts)	1

[redacted]

50X1-HUM

(d) cylinder with CO_2 for inflation of boat sides	1
(e) hand pump with hose for inflation of bottom and seat	1
(f) sea anchor for reducing speed of life boat drift	1
(g) scoop	1
(h) water-proof bag for holding emergency ratio, first-aid kit, and compass	1
(i) rubber plugs	4
(j) connector cord with snap hook	1
(k) case with repair material and spare parts	1 set per several life boats
(l) packing case	1

Packing Life Boats into Aircraft Containers

(Fig.52)

Prior to packing the life boat into the aircraft container:

1. Examine the life boat and make sure it is in good repair. Serviceabili of the boat is checked against the guaranteed service life.

2. Check the presence of the protective clamp on the cylinder cock.

3. Make sure that the guaranteed term of the cylinder operation (marked o the upper spherical part of the cylinder) has not expired.

4. Weigh the cylinder and make sure that it contains the required amount of carbon dioxide. The amount of carbon dioxide contained in the cylinder is determined as the difference between the weight of the cylinder with carbon dioxide and the weight of the empty cylinder with the cock.

The weight of the empty cylinder is indicated on the upper spherical part of the cylinder.

5. Check to see that the nut of the rod with the striker on the Ivanov coc is screwed on the rod so that after the connecting clamp is fitted in the nut slit (with the two-arm lever in the lower position), this clamp does not get out of the slit and at the same time does not compress the rod spring.

6. Secure the cylinder in position in the life boat pocket and connect th cylinder pipe union with the life boat tee-piece by means of the union nut loc ed on the tee-piece.

7. Remove all the equipment except the cylinder from the life boat.

8. Unroll the life boat on a flat surface and completely unscrew the lock nuts on the cocks of its sections.

9. By rolling up the life boat toward its rear end press out air from its sections, then unroll the life boat again to prepare it for placing into the aircraft container.

Fully screw up the lock nuts on the section cocks which open when the lif boat is unrolled.

10. To prevent the life boat from being inflated during flight, carefully remove the air remaining in the side sections, inflated seat, and bottom by mea of a hand pump. For this screw one end of the pump connector hose into the bod of the pump suction valve and its other end on the cocks of the sections, inflated seat, and bottom in turn.

Just after screwing the tip of the pump connector hose on the cock of the life boat section, unscrew the lock nut of the cock together with the hose by two or three turns. After the air has been removed from the section screw up the lock nut again as far as it will go and then unscrew from it the tip of the pump connector hose.

> CAUTION: After the air has been evacuated from all the sections of the life boat, remove the pump connector hose from the suction valve and connect it to the delivery valve.

11. Place the oars, extension, pump, sail, and cone plugs into the nose pocket of the life boat. This done, lace up the pocket.

12. Put food and water (or distiller), the first-aid kit, and means of signalling into the water-proof bag. Then secure the water-proof bag to the loops on the life boat by means of pins.

13. Lay out the life boat on a flat surface again.

> Note: Lay out the life boat which is to be placed into the first container with the bottom up and the life boat which is to be placed into the rear container with the bottom down.

14. Fold the sides of the life boat body to the centre so that the width of the folded life boat is equal approximately to 750 mm and roll up the life boat.

15. Prior to placing the life boat into the aircraft container, check the container cover remote control for proper functioning.

During the check pay attention to the correctness of the control adjustment when the container cover is open and the correctness of the cylinder cock operation. The cylinder cock must operate immediately after the locks of the container cover have been opened.

The succession of operations of the locks and the cock should be checked by bringing the remote control into operation from the seats of the aircrew members with the container cover open and the empty cylinder without the boat placed into the container.

16. After the operation of the container locks and the cylinder cock has been checked, place the life boat into the container and connect the snap hook of its connector cord to the container eye.

Connect the cable of the cylinder cock remote control to the fork of its lever having previously passed it through the guide hole in the cock bracket. To prevent the cable ball from jumping out, tie it up with two threads No.10.

17. Remove the protective clamp from the rod of the cylinder cock.

18. Prior to closing the container cover check whether there is free space for the cock lever taking into consideration its movement (throwing back) when the cover is being open.

19. Secure the container cover in position.

For this purpose:

(a) fit the cover hinges over the studs in the box base;

(b) press the cover.

[redacted]

50X1-HUM

(c) pull and then let go the cover (it serves also as a handle) of the auxiliary hatch.

CAUTION: Pull the cable of the auxiliary hatch smoothly because a strong pull at the cable may cause the cock of the life boat cylinder to operate.

20. Check the lock for reliable closing and the closed container cover for correct position relative to the fuselage contour.

The locks are checked for correct closing by the position of the lock indicator.

21. Seal the slits between the container cover and the fuselage skin with tape, type ЛТЛ.

22. Install seals on the container cover remote control handles.

Life Boat Faults Encountered during Service and Their Elimination

The following faults may be encountered during service: punctures, separation of parts, small tears, stiff movement of the pump piston and its ineffective operation.

In the event of such faults the life boat can be repaired in the unit.

To repair the tears, proceed as follows:

1. Slightly clean the damaged portion of the life boat with glass paper, wipe it with a clean piece of cloth soaked in gasoline and dry during 5 minutes.

2. Cut a patch of the required size from the rubberized cloth included in the life boat group set and treat it in the same manner as the damaged portion on the life boat. Round off the patch corners.

3. Apply a thin layer of rubber cement No.4508 to the cleaned portion of the life boat and the patch (the cement is included in the repair set).

Then in 10 or 15 minutes apply a second layer of cement and in another 10 or 15 minutes apply a third layer.

4. Keep the parts covered with cement in the air till gasoline contained in the cement has completely evaporated (the cement must not stick to the finger).

5. Place a patch on the damaged portion of the life boat and roll it tightly with a cylindrical object.

6. Reinforce the life boat portion under repair by fitting another patch of the same material over the first one. The second patch should overlap the first one by 20 or 30 mm.

The second patch is prepared and cemented in the same manner as the first one.

In case separated seams are detected, thoroughly wash the surfaces of the seams and parts with gasoline and then coat them with cement and proceed as prescribed above.

After the repair, check (after 24 hours) the life boat for strength and tightness in the following manner:

1. Remove the cylinder with carbon dioxide.

2. By means of the hand pump charge the life boat compartments with air so that pressure in the boat sides, inflated seat, and bottom is equal to 80 mm of mercury (465 km. per hour by the speed indicator).

Keep the life boat under this pressure during four hours and then examine it carefully.

The life boat is considered to be fit for service after the repair if air

pressure in its compartments decreases during 4 hours not more than to 50 mm of mercury (370 km. per hour by the speed indicator) and in the inflated seat - not more than to 40 mm of mercury (355 km. per hour by the speed indicator).

After the repair record the results of inspection and check in the life boat Service Log.

Repair of Life Boat Hand Pump

During service defects in the hand pump may arise. They are detected by stiff movement of the piston or by ineffective operation of the pump. The defects may be caused by improper lubrication of the piston leather cups.

Disassemble the defective piston and fill the cylinder recesses between the piston cups with oil, mark M3C.

To disassemble the pump, carry out the following operations:

(a) remove the upper cover of the pump;
(b) remove the rod with the piston;
(c) unlock the end face screw securing the piston to the rod;
(d) remove the piston.

Assembly of the pump is the reverse of the procedure described in Items 1 - 4.

Charging Life Boat Cylinder with Carbon Dioxide

To charge the life boat cylinder with carbon dioxide, it is necessary to have the following tools and equipment:

(a) pump for charging the cylinders with carbon dioxide. In case a pump is not available, the life boat cylinder can be charged from the transportation cylinder with carbon dioxide;

(b) special wrench for the nut of the Ivanov cock (supplied with the cock);

(c) set of standard wrenches of the following sizes: 42, 30, 22, 20, 14, and 12 mm;

(d) tube of red copper 6x4 mm in size and 2 m. long with union nuts at the ends for the cocks of the transportation cylinder and the cylinder to be charged;

(e) scales with a set of weights up to 10 kg accurate within 10 gr;

(f) screw driver;

(g) standard capsules for the Ivanov cock.

Prior to charging the cylinder make sure that the guaranteed term of cylinder service life and that of storage of carbon dioxide in the transportation cylinder have not expired, that is the cylinder and the carbon dioxide are fit for service.

The cylinders are charged with dehydrated carbon dioxide. To charge the cylinder, proceed as follows (Fig.53):

1. Unscrew nut 9 of the rod on the Ivanov cock.

2. Using a special wrench and a screw driver unscrew nut 11 with capsule 2 and then replace the damaged capsule by a new one.

3. Pour 15 gr of 96° rectified alcohol into the cylinder.

4. By means of a special wrench and a screw driver screw the plug with the capsule into the cock socket as far as it will go. Weigh the cylinder together with the wrench.

[redacted]

50X1-HUM

5. Connect the cock of the cylinder to be charged to that of the transportation cylinder through the pump or directly, by means of a separate pipe.

Note: When delivering carbon dioxide from the transportation cylinder to the cylinder being charged, the transportation cylinder should be installed with the cock downward. The cock of the cylinder being charged should be below that of the transportation cylinder.

6. Open the transportation cylinder cock. If charging is done by means of a pump, open the shut-off cock of the pump distributing pipe.

7. Unscrew the nut with the capsule by 3 or 4 turns and put the cylinder on the scales.

After the cylinder has been filled with carbon dioxide to the required weight, screw up the nut with the capsule so far as it will go and screw up the shut-off cock of the pump distributing pipe.

8. Disconnect the cylinder from the pipe line and weigh the cylinder again together with the wrench. If there is excessive amount of carbon dioxide, release part of carbon dioxide into the atmosphere.

9. Unscrew the special wrench from the cock of the charged cylinder and make sure that there is no leakage of carbon dioxide.

Note: Check the cylinder for leakage after its cock has completely thawed out, that is approximately in two hours, when the cock has assumed the ambient temperature. To perform the leakage test cover the cock with soapy water and watch for bubbles. The appearance of air bubbles is indicative of leakage.

10. Screw up the gland nut and mount the protective clamp on the cock.

Having charged the cylinder of the life boat, make a corresponding entry in the Service Log.

Use of Life Boat

Life boats are dropped after alighting when the aircraft has stopped moving on water just before the aircrew members abandon the sinking plane.

To drop the life boat, sharply pull out the handle. This will cause the container to open and will put the cylinder with carbon dioxide into action.

The life boat becomes inflated with gas, gets out of the container and is held near the aircraft by the connector cord.

If prior to the sinking of the aircraft the life boat is not disconnected from the aircraft by someone of the aircrew, after complete sinking of the aircraft the strap fastening the connector cord to the life boat will break and the life boat will remain afloat.

CAUTION: It is not reccomended to jump into the life boat from the aircraft so as not to damage the life boat bottom.

After the aircrew members get into the life boat, check whether its compartments are fully inflated with gas and, if necessary, pump air into the corresponding compartments by means of the hand pump and charge the inflated seat and the bottom with air.

To pump air into the side compartments, the inflated seat, and the life boat bottom, proceed as follows:

(a) take the hand pump out of the life boat luggage compartment and screw one end of its connecting hose into the charging pipe union and its other end into the cock of the life boat compartment to be charged;

(b) screw out the cock of the boat compartment to be inflated by two turns;

(c) charge the compartment with air so that on pressing the casing with the thumb, the casing caves inward but slightly;

(d) screw up the cock as far as it will go;

(e) disconnect the connecting hose of the hand pump from the cock.

On detecting a hole in the life boat casing choose a conical plug corresponding to the size of the hole. By energetically screwing the plug into the hole, close the latter so that no air bubbles come out of it.

Chapter IV

AIRCRAFT CONTROLS.

CARE AND MAINTENANCE

1. CARE OF AIRCRAFT CONTROL SYSTEMS AND PERIODICAL CHECKS

(Fig.54)

An aircraft in service should be constantly checked for condition of its control systems. Periodically, when carrying out scheduled maintenance operatio as well as during preflight and postflight inspections, perform the following operations:

1. Check the rudder, elevators, ailerons and their trim tabs (servo tabs) f angular and linear deflections comparing the data obtained with the data in Table 8.

Table 8

Angular and Linear Deflections of Aircraft Control Surfaces

Name of control surface		Direction of deflection	Angle of deflection, deg.		Deflection in linear size mm	
			value	tolerance	value	tolera
1		2	3	4	5	6
Elevator		Upward Downward	26 12	- 1 - 1	312 144	- 12 - 12
Elevator trim tab	Deflection from pilots' control column	Upward Downward	12	- 2	36	- 6
	Deflection from ЭТ-11 electric mechanism	Upward Downward	8	+ 1	24	+ 3
Rudder		To the right To the left	25	- 1	437	- 18
Trim tab used as rudder servo tab		To the right To the left	15°40'	+ 1 - 2	61	+ 4 - 8
Rudder trim tab		To the right To the left	7	± 1	28	± 4
Ailerons		Upward Downward	15	- 1	238	- 16
Trim tab used as aileron servo tab		Upward Downward	4°30'	± 20'	15	± 1
Aileron trim tab		Upward Downward	5	± 40'	17	± 2

Notes: 1. The angular and linear deflections of the rudder, elevators, ailerons and trim tabs are to be measured at their trailing edges at the bases of the ground-adjustable trim tabs. The control surfaces should be checked for deflection as follows: the ailerons and their trim tabs - at their inner faces, the elevators - at their inner faces, with the trim tabs in the neutral position, the elevator trim tabs - at the outer faces, the rudder - at the lower face, and its trim tab - at the upper face.

2. With the aileron deflection close to its maximum value, the trim tab used as a servo tab should deflect by 15^{+1} mm; with the aileron deflection close to its minimum value, the trim tab should deflect by 15_{-1} mm.

CAUTION: Prior to adjusting the ailerons and rudder do not fail to read the entries in the aircraft Service Log pertaining to the additional operations performed on these control systems. The description of these operations is to be found in Section 8 "Special Instructions" of this Chapter.

[redacted]

50X1-HUM

2. Check the rudder, elevators, ailerons and their trim tabs for proper response:

(a) when the control columns are pulled back, the elevator should go upward, and when they are pushed forward, the elevator should move downward;

(b) when the aileron control wheel is turned to the right (clockwise), the right-hand aileron should go upward and the left-hand aileron - downward; when the aileron control wheel is turned to the left (counter-clockwise), the right-hand aileron should go down, whereas the left-hand one should move upward;

(c) when the right-hand pedals of each panel are pushed forward (in the direction of flight), the rudder should deflect to the right, and when the left-hand pedals are pushed forward, the rudder should deflect to the left;

(d) when the rudder and ailerons are deflected by the mechanical system, the trim tabs (servo tabs) should automatically move in the direction opposite to that of the rudder and ailerons;

(e) when the mechanical control wheel upper part is moved forward, the trim tabs of the elevators should go up, and when the wheel upper part is pulled back, trim tabs should move down;

(f) when the knobs of the elevator trim tab electric control system switches are pushed forward, the trim tabs should go upward, and when they are pulled back, the trim tabs should go down (the switch knobs are located on the thickened spokes of the pilots' control wheels);

(g) when the rudder trim tab electric control switch knobs located on the wall panels are moved to the right, the rudder trim tab should move to the left, and when the knobs are moved to the left, the trim tab should go to the right. With the trim tab in the neutral position, the signal lamp on the instrument board of the left pilot (in the R.H. lower portion) should be on;

(h) when the aileron trim tab electric control switch knobs located on the wall panels are moved to the right, the trim tabs should move as follows: that of the R.H. aileron - downward; that of the L.H. aileron - upward; when the knobs are moved to the left, the R.H. aileron trim tab should move upward and that of the L.H. aileron should go downward. With the trim tabs in the neutral position, the signal lamps on the instrument board of the left pilot (in the R.H. lower portion) and on the synchronizing panel (behind the seat of the left pilot) should be on;

(i) the movement of the elevators and rudder in the mechanical systems is limited by stops on the quadrant bell cranks located at frame No.69, whereas the movement of the ailerons is restricted by stops arranged on the brackets of the bell cranks located at wing ribs No.16;

(j) when the elevatoe are in the extreme lower position, the control columns should touch the stops located on the middle stands of the foot control assembly;

(k) the movement of the elevator trim tabs (in the control wheel mechanical system) is restricted by ball stops on the cable located at frames Nos 61 to 63 and resting against the textolite plate on frame No.62;

(l) the movement of the trim tabs of the rudder, elevators and ailerons in the electric control systems is restricted by limit switches arranged as follows: those for the rudder and aileron trim tabs - in the electric mechanisms; those for the elevator trim tabs - on the column of the distributing drums on the rear cabin upper panel;

(m) when the handles of the locking systems are placed in position LOCKED (ЗАСТОПОРЕНО), the rudder, elevators, and ailerons should be fixed without knocks and appreciable play in the following positions:

(1) the elevator should be fixed in the downmost position; in this position the control columns should rest on the front stops and the clearance between them and the instrument boards should be at least 32 mm;

(2) the rudder should be fixed in the neutral position and the pedal quaarants should be lined up;

(3) the ailerons should be fixed in the neutral position; in this position both control wheels should be turned to the right (clockwise) through an angle of $6 \pm 1^{\circ}$;

(n) when the elevator trim tabs are in the neutral position, the pointers of their position indicators on the panels should stand against zero, and the pointer flicker in both directions should be equal;

(o) when the handles of the rudder, elevator, and aileron locking systems are placed in position UNLOCKED (ОТСТОПОРЕНО), there should be a clearance of 3^{+1} mm between the faces of the locking pins and the nearest moving parts of the control system to be locked;

(p) with the rudder, elevators, and ailerons moved to any position, their trim tabs should deflect as indicated in Table 8.

3. The cables of the aileron control system which pass under the pilots' cabin floor, the cables connecting the autopilot servo units, the cables of the rudder, elevator, and aileron locking system, as well as the cables of the elevator trim tab control system, should be tightened as indicated in the Charts (Figs 55, 56, 57, and 58). The tension of the cables running from the autopilot servo unit drums in the rudder and elevator control systems should be checked in accordance with the data given in Fig.59.

4. The friction forces in the mechanical control systems must not exceed 7 kg in the elevator system, 10 kg in the rudder system, 5 kg in the aileron system, and 2.5 kg in the elevator trim tab system.

The friction force measuring diagrams for these systems are given in Figs 60, 61, 62, and 63. The friction forces should be measured by means of a reference dynamometer. During the test the controls (control wheel, pedals, etc.) should be moved gradually from the initial to the extreme positions. The efforts required for starting the system at the beginning are not taken into account. The mean value of three measurements is taken as the resultant friction force value.

5. Check the condition of lubricant in the hinge joints and fairleads. During service the following components should be always coated with a thick layer of the ЦИАТИМ-201 lubricant only:

(a) all hinge joints of the rods and bell cranks and the connections of the rods;

(b) the cable fairleads. The recess of the fairlead unit of the rudder, elevator, and aileron control rods should be completely filled with lubricant;

(c) the entire cable length;

(d) the pulleys of the rod guiding supports;

(e) the cable grooves in the pulleys, cable drums, and quadrants;

(f) the spherical supports of the aileron control mechanisms and the aileron carrier pins entering the supports.

6. Check the bell cranks, drums, and pulleys for easy and smooth rotation within the entire working range of displacement of these parts. This range should ensure such a deflection of the rudder, elevators, ailerons, and trim tabs (servo tabs) as indicated in Table 8.

7. Check the position of all moving and rotating parts of the aircraft control systems with respect to the framework and equipment. When moving, these parts must be clear of the aircraft framework and equipment. During the check see that the following clearances are retained:

(a) at least 3 mm between the cables and stationary parts of the aircraft structure in the spaces between the cable supports, and at least 2 mm between the

[redacted]

50X1-HUM

same elements at a distance of up to 100 mm from the places where the cables ru off the pulleys. In places where the cable connecting parts may touch each oth or touch the framework of the aircraft, the cable connecting elements should be enclosed in leather covers;

(b) at least 5 mm between the rods of the rigid control systems and the air craft framework in the spaces between the rod supports, and at least 2 mm betwee these elements at a distance of up to 100 mm from the support. If the support is a bell crank, this clearance should be ensured at all working positions of the bell crank;

(c) at least 5 mm between the control moving parts and the moving parts of any other assembly.

Note: The cable is allowed to touch textolite parts, but must have no bends.

8. Check the clearances between the moving parts on the foot control assemblies, as well as between these parts and the stationary parts. The clearance in these places should be not less than 3 mm, except:

(a) the clearance between the pedals and the side stamped carriers of their suspension. This clearance should not be less than 1.5 mm;

(b) the clearance between the quadrant bell cranks of the pedals and the bolt nuts on the lower arms of the cast control bell cranks of the L.G. wheel braking valves. This clearance should be at least 2 mm;

(c) the clearance between the pedal quadrant bell cranks and the control column tubes. This clearance should not be less than 5 mm.

9. Check the clearances between the beads of the cable control pulleys and the restricting shafts or the part of the brackets that prevents the cables from running off the pulleys. The clearances in these places should be:

0.15 to 0.8 mm for 2.5-mm dia. cables;
0.15 to 1.0 mm for 3.5- and 4.5-mm dia. cables;
0.15 to 2.5 mm for 8-mm dia. cables.

The side clearances between the pulleys and the webs of their brackets shoul not be less than 0.5 mm.

10. Check the clearances between the tubes of the rigid control rods and the control pulleys of their supports. When the tube is pressed to two pulleys, the clearance between this tube and the third pulley should be within 0.15 - 1.0 mm (Fig.64). In case this clearance exceeds the indicated value, replace one of the three pulleys by a pulley of a larger diameter. In doing so, observe the following:

at a clearance of 1.1 mm the diameter of a new pulley should exceed that of the replaced pulley by 1.8 mm;
at a clearance of 1.2 mm, by 2.1 mm;
at a clearance of 1.3 mm, by 2.4 mm.

After installation of a new pulley the clearance should be within 0.15 - 0.6

11. Check the clearance between the tubular rivets of the rods and the pulle of their supports with the rudder and elevator moved to the extreme positions. Th clearance should be at least 3 mm.

12. Check the rod tubes for "cold hardening" and longuitudinal dents on the surface under the support control pulleys. "Cold hardening" up to 0.5 mm deep is permissible. In the case of deeper "cold hardening", turn the tube through 180° o its axis. In case "cold hardening" on both opposite sides of the tube is deeper than 0.5 mm in one section, replace the rod by a new one.

13. Check the condition of the cables throughout their length. There should be no torn strands. In places where the cables bend over the pulleys, in the plastic "eyes", on the textolite collars or where the cables touch the textolite facing, the cable surface may have minor chafing and "cold hardening". Do not fail to bend the chafed and "cold hardened" cable sections and check them for torn strands. A cable with torn strands should be replaced by a new one.

14. Check the condition of the aileron control cables running under the floor of the pilots' cabin. Such checks should be performed at least after every 50 flying hours. After 100 flying hours replace these cables by new ones regardless of their condition.

15. Check the position of the cables with respect to the plane of their control pulleys. In places where the cables run off the pulleys and the quadrant bell cranks, the permissible misalignment of the cables with respect to the plane of their control pulleys is up to 2° (3.5 mm over a distance of 100 mm). In this case the cable must not touch the pulley beads (Fig.65). Excessive misalignment of a cable should be remedied by placing washers under the pulley bracket footing. In places where the cables run off the drums of the autopilot servo units, as well as off the pulleys connected by cables with the drums of the autopilot servo units, a misalignment of up to 4° is permissible.

16. Check the condition of the control pulleys in the cable systems. The pulleys may be chafed on the inner surfaces of the beads of the cable grooves, but the thickness of the beads on their outer diameter should be not less than 0.6 mm on pulleys for 2.5-mm dia. cables and not less than 1 mm on pulleys for 3.5- and 4.5-mm dia. cables.

Should textolite exfoliation or binding in bell bearings be detected, replace the pulleys by new ones.

17. Check the position of the cables in the grooves of the drums, pulleys and quadrants. The cables should make a tight fit with the grooves of the drums and quadrants. The grooves should be well greased.

18. Check the condition of the threaded cable lugs. They should be turned into the couplings to an equal length, and not more than three threads may protrude beyond the coupling face.

19. Check the condition of the rubber covers on the universal joints of the elevator trim tab control mechanism. The covers should have no holes through which the lubricant could leak out.

20. Check the hinge joints of the rods and bell cranks as well as the rivet joints of the rods for play. There should be no appreciable play or knocking. Should any play or wear of the hinge bolt be detected during the inspection of the joint, replace the bolt. If hole expansion is detected in the rod forks, replace the rods or press-fit bushings into the forks.

21. Check the condition of the universal joints of the rudder, elevator, and elevator trim tab control mechanisms. In the case of play (knocks) in these joints, replace the joints by new ones.

22. Check to see that there is no excessive play in the locking pins of the mechanisms serving to adjust the pedals to the height of the pilot. Permissible diametral play in the quadrant recesses is 0.4 mm.

23. Check the trailing edges of the trim tabs for play, which must not exceed 3.5 mm. The play is measured with dynamometer A9883-0 with an effort of 4 kg applied to the base of the ground-adjustable trim tab opposite the rod attachment levers.

24. Check the condition of the chrome-plated rods of the rigid control fairlead assembly. There should be no traces of brass on the rod working stroke por-

[redacted]

50X1-HUM

tions. Should brass traces be detected, replace the rubber sealing rings in th fairlead assembly. Brass traces are the result of the rod rubbing against its brass bushing which testifies to considerable wear of the rubber sealing rings and to side play of the rod.

25. Check the condition of the rubber cores of the cable fairleads. Worn cores should be replaced by new ones. The recess of the new core should be fill with fresh grease.

26. Check the condition of the bonding strips. During operation of the co trol systems these strips are allowed to touch the adjacent components of the aircraft structure without embracing the projecting parts of the latter and wit out interfering with the movement of the control systems on their working str portions.

Bonding strips with broken wires over 25% should be replaced by new ones.

27. Check the tightening of the attachment bolt nuts of the supports of th control columns, foot control assemblies and elevator trim tab control assembli as well as the tightening of the nuts of all the brackets and supports of the rigid and cable controls. The nuts should be well tightened, and the castellate nuts cottered. The attachment must be tight and have no play.

28. Check the tightening of the bolts of the split and hinge joints of th cables and rods of all the control systems. The bolts should be well tightened, and their nuts cottered. The cable turnbuckles should be locked with wire.

29. Check the condition of the anticorrosive coating and paint of the part Damaged coating should be promptly restored.

2. ACCESS PANELS TO CONTROL SYSTEM UNITS

To inspect and adjust separate units of the aircraft control systems arra under the floor of the pilots' front pressurised cabin between frames Nos 5 an there are access panels located on the longitudinal and lateral beams of the f framework. Access to the aileron control quadrant bell crank located at frame is ensured by removal of the L.H. pilot's seat. The cables of the engine contr panels are inspected through access holes located on the panel vertical walls. The control elements behind frame No.9 are examined from the side of the entra hatch door.

Access to the control linkage between frames Nos 12 and 56 is ensured by access panels in the fuselage skin and by holes made in the vertical walls of beams. The removable panel located on the vertical wall of the L.H. beam betwe frames Nos 46 and 49 provides for removal and installation of the rigid control elements arranged between frames Nos 26 and 56. Removal and installation of th rudder, elevator, and aileron control rods between frames Nos 12 and 26 are do through an access panel in the compartment of the L.G. nose leg.

The cable and rigid control linkage between frames Nos 56 and 69 is not covered and is open for inspection.

The rudder and elevator control systems, as well as the elevator trim tab control system located above the upper panel of the rear pressurised cabin, ca be inspected with the components of the stabiliser and fin fairings removed. T removable side panels on the fin tail provide access to the rudder universal joint shaft. The rudder trim tab(servo tab)control system units are accessible through access panels and fairings on the fin and on the rudder. The elevator trim tab control system elements located inside the elevator are examined thro access panels and also with the trim tab actuating mechanism fairings removed.

The aileron controls in the first detachable wing sections are examined through access panels located in the upper skin behind the spars, through cuts made in the wing above the trailing edge, with the engine nacelle covers removed, and with the main landing gear doors open.

The controls of the ailerons and their trim tabs(servo tabs)in the second detachable wing sections are accessible through access panels located in the skin lower surface, through removable panels in the vicinity of the ailerons, and with the aileron trim tab control rod fairings removed.

3. ADJUSTMENT OF MAIN AIRCRAFT CONTROL SYSTEMS

Elevator Control System

The elevator control system is adjusted as follows:

1. Place the elevator in the neutral position and fix it with screw clamps.
2. Place the control columns in the neutral position (in this position the column tubes are inclined forward by $1^{\circ}30'\,{}^{+15'}_{-45'}$) and fix them to the pedal attachment tubes.
3. Connect the control system rods to each other and to the bell cranks.
4. Place the control system bell cranks in the neutral position, for which purpose adjust the length of the rods by means of their threaded ends.
5. Adjust the position of the stops on the quadrant bell crank at frame No. 69. To this end, release the elevators and control columns and move the elevators up and down to the extreme positions indicated in Table 8.
6. Check the elevators for correct movement to the extreme positions, then lock the adjustable rod ends, cotter the nuts of the hinge bolts and put in place the aircraft bonding strips removed during adjustment.
7. Measure the friction force in the control system (See Fig.60). It should not exceed 7 kg.

Rudder Control System

The rudder control system is adjusted as follows:

1. Lock the control system quadrant bell crank located at frame No.69.
2. Place the rudder in the neutral position along the rear edge of the fin tail fairing, for which purpose adjust the length of the rod so as to connect the upper arm of the quadrant bell crank with the bell crank which is linked with the rudder universal joint shaft.
3. Adjust the position of the stops on the quadrant bell crank, for which purpose move the rudder to the left- and right-hand extreme positions indicated in Table 8.
4. Place the foot control pedals in the neutral position. In this position the pedals set into the similar regulating holes of the quadrants should be aligned. Secure the pedals in the neutral position by placing a wooden plank between the foot control assembly and the pedals.
5. Interconnect the control system rods and connect them to the bell cranks.
6. Place all control system bell cranks in the neutral position, adjusting the length of the rods by means of their threaded ends.

[redacted]

50X1-HUM

7. Check the rudder for correct movement to the extreme positions, for purpose release the pedals and unlock the quadrant bell crank, then lock the adjustable rod ends, cotter the nuts of the hinge bolts and put in place the craft bonding strips removed during adjustment.

8. Measure the friction force in the control system (See Fig.61). It sho not exceed 10 kg.

Aileron Control System

The aileron control system is adjusted as follows:

1. Place the wheels of the control columns in the neutral position. In th position the axis of the spoke with the arrow should be parallel to the tube the control column. Make sure through the inspection ports in the control colu heads, that the middle link of the geared chain (with its shaft cottered) is located along the control column centre line.

2. Connect the cables coming out of the control columns with the cables the quadrant bell crank on frame No.8.

3. Place the quadrant bell crank in the neutral position by adjusting the length.

4. Lock the control system bell crank located at frame No. 33 and connect with the quadrant bell crank by means of rods.

5. Release the control column wheels and by means of the threaded ends ad the length of the rods at the fairlead assembly to place the control column so that they are inclined to the right (clockwise) by an angle of 8 ± 1°.

6. Tighten the cables in accordance with the data given in Fig. 55.

7. Place the ailerons in the neutral position and fix them with screw cla

8. Connect the aileron control rods to the bell crank located on the L.H. at frame No. 33.

9. Place the control system intermediate bell cranks on the rear wing spa in the neutral position adjusting the length of the rods by means of their thr ends.

10. Release the bell crank at frame No. 33. Then move the ailerons up and down in turn on the left and right wings to the extreme positions indicated in Table 8 to adjust the position of the stops at the bell cranks located in the vicinity of ribs No. 16.

11. Check the extreme positions of the ailerons, then lock the adjustable threaded ends of the rods, cotter the nuts of the hinge bolts and put in place the aircraft bonding strips removed during adjustment.

12. Measure the friction force in the control system (See Fig. 62). It sh not exceed 5 kg.

4. ADJUSTMENT OF TENSION OF CABLES CONNECTING MAIN CONTROL SYSTEMS WITH AUTOPILOT SERVO UNITS

Tension of the cables of these systems is adjusted as follows:

1. Adjust cable tension in accordance with the data given in Figs 56 and 5 keeping the drums of the servo units in the neutral position.

2. Actuate the main system controls to check the rudder, elevators and ailerons for correct movement to the extreme positions with the autopilot cut

3. Measure the effort required for servo unit drum slipping with the autopilot operating. The heads of the bolts securing the cables to the quadrants should face the aircraft centre line.

<u>Note</u>: Adjustment of the servo units of the autopilot is described in the respective Section of Chapter "Electric Equipment", see "Ty-16 Aircraft. Service Manual", Book II.

5. ADJUSTMENT OF ELEVATOR TRIM TAB CONTROL SYSTEM

This system is adjusted as follows:

1. Place the trim tabs in the neutral position.

Then connect by means of cables the trim tab actuating mechanism drums located in both halves of the elevator with the drum of the distributing column on the upper panel of the rear cabin. The ends of the cables running from the mechanism drums should be of equal length and come off the drum in the middle.

Note: If one or both trim tabs cannot be placed in the neutral position, disconnect their mechanism from the trim tab control horn and place the trim tabs in the neutral position by screwing in or out the threaded ends of the mechanism. If adjustment of the mechanism threaded ends does not ensure exact placing of the trim tabs in the neutral position, then place washers of the required thickness between the drum body footing and the spar wall.

2. Connect the cables of the distributing column drums and of the trim tab actuating mechanisms and adjust their tension in accordance with the data given in Fig.58.

3. Check the trim tabs for correct movement to the extreme positions (See Table 8), turning the distributing column drums by the cables.

4. Place the trim tab actuating mechanisms on the L.H. and R.H. pilots panels in the neutral position. The trim tab position indicator pointers should stand against zero and have equal play in both directions, whereas the cables should run off in the middle of the drums.

5. Connect all the system cables between the panel and distributing column drums and adjust their tension in accordance with the data given in Fig. 58.

6. Check the trim tabs for maximum deflection according to Table 8, as well as the limiting of the control system travel by the ball restrictors placed at the textolite collar on frame No. 62.

Note: On replacing a cable with restricting balls upset the balls on the new cable so that they approach the textolite collar on frame No. 62 when the trim tabs are in the extreme positions.

7. Cotter the nuts of the cable bolt joints and the restricting shafts. Then lock the turnbuckles.

8. Put leather covers in place and connect the cables located at frames Nos 9 and 56 and in both halves of the elevator.

Note: Adjustment of the limit switches of the FT-11 electric mechanism is described in Chapter "Electrical Equipment", see "Ty-16 Aircraft. Service Manual", Book II.

9. Measure the friction force in the control system (See Fig. 63). It should not exceed 2.5 kg.

[redacted]

50X1-HUM

6. ADJUSTMENT OF SYSTEM USED TO LOCK RUDDER, ELEVATORS, AND AILERONS ON PARKED AIRCRAFT

This system is adjusted in the UNLOCKED position as follows:

1. Use shims to ensure a clearance of 3^{+1} mm between the faces of the lo mechanism pins and the locking recesses on the sliding elements of the control systems of the elevators, rudder (chrome-coated plates on the quadrant bell c at frame No. 69) and ailerons (the shackle on the upper arm of the L.H. bell at frame No. 33);

2. Fix the locking handle on the L.H. pilot's panel in the UNLOCKED posit

3. Connect all cables of the locking system and adjust their tension consecutively in accordance with the data given in Fig. 57. Adjust also the tensi of the rudder, elevator, aileron and engine throttle control locking cables.

4. Check the operation of the system, seeing that:

(a) in the locked position the pins enter the respective recesses on the elements of the locked systems. When varying loads are applied to the pedals, wheels, rudder, elevators or ailerons with the system locked, there should be knocks in the joints of the locking pins due to play. Deflection of control el ments due to resilience is permissible;

(b) with the system unlocked, the clearance between the faces of the lock pins and the sliding parts of the system to be locked is within 3^{+1} mm;

(c) the locking handle is securely fixed in the front and rear extreme po tions.

5. Cotter the nuts of the cable bolt joints and the restricting shafts, lock the cable turnbuckles.

6. Put the leather covers on the cable joints located between frames Nos and 34 and at frame No. 56.

7. ADJUSTMENT OF RUDDER AND AILERON TRIM TAB (SERVO TAB) CONTROL SYSTEMS

The rudder and aileron trim tab (servo tab) control systems are adjusted with the trim tabs and the rods of the trim tab control electric mechanisms (MП-100A-36 and MП-100A-60) in the neutral position. This is done as follows:

1. Connect the electric mechanism rod with the bell crank.

2. Put the rods in place retaining the trim tabs in the neutral position.

3. Check the deflection angles of the trim tab used as a servo tab when th rudder or aileron is moved to the extreme positions. This should be done in co pliance with Table 8. If the rudder deflection angles to the right and to the left and the aileron deflection angles upward and downward are correspondingly equal, the deflection angles of their trim tabs (servo tabs) should also be equ

<u>Note</u>: The proportion between the deflection angles of the aileron trim ta (servo tab) and the aileron should be observed most carefully, otherwise the pilot may experience appreciable load difference in the co trol system when the aircraft is banked to the right or left. If th trim tab deflection angles are not equal at equal deflection angles of the rudder or ailerons on both sides, this defect should be remed by reducing or increasing the length of the rods by means of their threaded ends. Adjustment should be performed with the trim tab in th neutral position.

4. Check the movement of the trim tab to the extreme positions from the electric mechanism. In doing so observe the data given in Table 8. This check is done with the rudder and ailerons in the neutral position and when they are moved to their extreme positions in both directions.

<u>Note</u>: Adjustment of the electric control system and electric mechanism limit switches is described in Chapter "Electrical Equipment", see "Ту-16 Aircraft. Service Manual", Book II.

5. Cotter the hinge bolts, lock the adjustable rod ends and put in place the aircraft bonding strips removed during adjustment.

8. SPECIAL INSTRUCTIONS

Flying tests performed at the Manufacturing plant have shown that some of the serial aircraft issued by the plant do not possess at first the sufficient lateral and directional stability which is then ensured during the finishing process at the plant airfield. Such defects may also occur during service of the aircraft due to distortion of profiles or shape of both airframe assemblies and aircraft controls.

This Section contains description of various defects in aircraft lateral and directional stability detected at the Manufacturing plant, as well as the recommended methods of their remedy. Besides, instructions are given here on correction of these defects in the course of aircraft service.

<u>Aircraft Lateral and Directional Instability. Methods of Correction at Manufacturing Plant</u>

During flying tests at the Manufacturing plant additional operations are performed on some serial aircraft to ensure normal lateral and directional stability. These operations are based on the reports of the test pilots. Description of these additional operations is entered in the aircraft Service Log. Prior to checking adjustment of the aircraft control system in service do not fail to read the entries in the Service Log pertaining to the operations performed on the aircraft control system.

Flying tests at the Manufacturing plant have revealed the following defects in the control system of some aircraft:

1. The aircraft tends to bank with the ailerons and their trim tabs in the neutral position. This phenomenon takes place at high and low speeds of the aircraft only.

2. The aircraft acquires lateral stability only after deflecting to a certain extent the control column wheel from the neutral position, with no load from the ailerons felt on the control wheel, i.e. when the ailerons are moved to some distance from the neutral position.

3. Considerable difference in loads on the control wheel when the aircraft is banked to the right and to the left. This difference results from unequal aerodynamic compensation of the ailerons.

4. Total loads on the control wheel from the ailerons at all permissible flight operating conditions are too great or too small.

5. The aircraft tends to turn (to yaw) when the rudder and its trim tab are in the neutral position.

[redacted]

50X1-HUM

The above defects are partially or completely eliminated at the Manufacturing plant depending on the flying test results. This is done by the following methods.

The tendency of the aircraft to bank is eliminated by balancing the aircraft in flight using the aileron trim tabs (the aileron trim tab neutral position indicating lamps may be dead). The flight over, adjust the operation of the aileron trim tab neutral position indicating lamps by the balancing position of the trim tabs detected in flight.

Deflection of the control column wheels from the neutral position is remedied only if this deflection exceeds 8° in straight-and-level flight at medium ratings (height $H = 0.6H_{max}$, speed $V_{ind} = 550$ km/hr, and height $H = 0.85H_{max}$, speed $V_{ind} = 500$ km/hr), since a larger deflection of the control wheel will make aircraft control too difficult. The defect is remedied by creating "scissors" on the ailerons (the left-hand aileron is deflected downward and the right-hand aileron - upward from the neutral position, or vice versa) within the deflection range of ± 8 mm as measured along the trailing edges.

Relative equalising of the different load values exercised on the control wheel, when the aircraft is banked to the right or to the left, is achieved by reducing to some extent the maximum upward deflection of the servo tab of the aileron which goes down when a bank causing "smaller" load on the wheel is performed, i.e. the "smaller" load bank is given some additional load. For instance, if it is easier to bank the aircraft to the right than to the left, it is necessary to reduce maximum upward deflection of the servo tab of the left-hand aileron, which goes down during a right-hand bank. Conversely, when it is necessary to bank the aircraft to the left, reduce servocompensation of the right-hand aileron which goes down during the bank. The upward movement of the servo tabs may be decreased when equalising the loads on the control wheel up to 15_{-2} mm. In performing this operation, see that the trim tabs remain in the neutral position when the ailerons are neutral.

Other recommended steps for equalising the load on the wheel are:

(a) increase of the width of the slot between the aileron front edge which goes down when a "heavier" bank is performed and the trailing edge of the wing by a value of up to 6^{+2} mm as measured along the lower part of the wing profile;

(b) change in degree of inner aerodynamic compensation of the aileron due to partial closing of the special ports in the aileron front portions. This will result in increase of the inner compensation on the aileron which goes down when a "heavier" bank is performed. Depending on the difference of the loads, the ports on this aileron may be completely closed.

Aileron control at excessive load on the control wheel can be made easier by closing the ports on the aileron front portions.

To make aileron control "heavier" when the load on the control wheel is too small, displace the covers of the special ports to open the through holes made in the aileron front portions. Arrangement of the holes and the degree of hole opening should be the same on both ailerons.

The tendency of the aircraft to turn (to yaw) is eliminated depending on its intensity as follows:

(a) a turn of the aircraft, which can be eliminated in flight by deflecting the rudder trim tab by 2 - 3 mm, is remedied by bending the adjustable trim tab by 1 mm in the same direction in which the trim tab was deflected during flight. The neutral position of the trim tab, with the rudder in the neutral position, should be retained;

(b) a turn of the aircraft, which can be eliminated in flight by deflecting the rudder trim tab by 4 mm and more and which causes displacement of the right-ha

pedal by 40 to 80 mm with respect to the left-hand one, is remedied by displacing the neutral position of the trim tab by 3 mm in the direction of its motion during flight.

All operations performed in order to eliminate one or several defects must be duly registered in the Service Log of the given aircraft.

If a defect or defects recorded in the Service Log occur during the aircraft service again, then it is necessary first of all to check whether the control components are still in the positions recorded in the Service Log. If the aircraft control system components are in positions other than those set during adjustment, or if deformation is found on the adjustable trim tabs, repeat adjustment of the controls and recondition the adjustable trim tabs in strict compliance with the entries made in the Service Log.

Elimination of Lateral and Directional Instability of Aircraft Detected during Service

Minor deformation of the airframe elements due to unpredictable aerodynamic loads or due to rough landings, etc. may be the cause of lateral and directional instability described in this Section. These deficiencies may also develop on aircraft when replacing their ailerons, rudder, as well as their trim tabs. Elimination of defects in aircraft balancing should be accomplished in the same way as during the test flights at the Manufacturing plant airfield (See Section 8).

This Section deals with the methods of determining and correcting the defects in aircraft balancing. The defects in aircraft balancing are reported by the pilots and discovered by measuring the positions of the trim tabs and control wheels during the postflight inspection of the aircraft.

Determination of Aircraft Lateral and Directional Instability by Pilots during Flight

Instability is determined by the pilot in a horizontal straight flight at intermediate ratings in the following way:

1. When the pilot finds out that the aircraft tends to bank spontaneously, he should first of all determine the direction of the bank, balance the aircraft by the aileron trim tabs, and land the aircraft with the trim tabs deflected. After landing do not place the trim tabs in the neutral position until the angle of deflection is measured.

2. If during flight the balanced position of the aircraft is assumed only when the control wheel is turned by more than 8° from the neutral position, the pilot should make a mark on the upper part of the control column (Fig. 66) corresponding to the position of the control wheel in balanced flight and note the direction in which the control wheel was turned. Then on the ground it is necessary to determine by the marks the angle of control wheel deflection at which the aircraft assumes its balanced position in flight.

3. When the pilot finds out that there is a considerable difference in the loads on the control wheel in banking the aircraft to the right and to the left under the given flight conditions, the pilot should note the direction of the bank at which a smaller effort is required.

4. If it is discovered during flight that the loads in the aileron control system are too large or too small as the aircraft is banked, the pilot must determine whether the effort required is excessive or insufficient under the given flight conditions (for instance, the loads from the ailerons are too large, aileron control is difficult, aileron control is very difficult. etc.).

5. If the aircraft tends to turn spontaneously under the given flight condi-

[redacted]

50X1-HUM

tions, the pilot must eliminate this turn by actuating the rudder trim tab, not the direction of the turn, and land with the trim tab deflected. If it has been found out in eliminating the aircraft spontaneous turn by moving the trim tab that the displacement of the right-hand pedals with respect to the left-hand on exceeds 40 to 50 mm, the pilot must visually determine the actual amount of peda displacement. After landing the rudder trim tab must not be placed in the neutr position before measuring the angle of trim tab deflection in flight.

Measurements to Be Taken during Postflight Inspection in Case of Aircraft Lateral and Directional Instability

If one or several of the above-mentioned deficiencies in aircraft lateral and directional stability have been revealed in flight, and the pilot has follow the instructions prescribed in the previous Section, then the following operations must be performed during the postflight inspection:

1. If the aircraft tends to bank spontaneously, measure the linear deflection of the trim tabs and ailerons, at which the aircraft has no bank.

2. If in lateral balancing the aircraft requires excessive deflection of th control wheel (above 8°), measure the distance between the marks made on the hea of the control column (Fig. 67).

3. If the aircraft tends to turn spontaneously, measure the amount of line deflection of the rudder trim tab at which there is no spontaneous turn of the aircraft in flight.

Notes: 1. Measurements under Items 1, 2, and 3 should be accomplished with the aileron and rudder control systems locked. With the systems in this position, check the neutral position both of the ailerons and r The neutral position of the rudder should be checked also in case there are no complaints of the pilot about the aircraft directional instability.

2. If the pilot reports about a difference in the loads at the right and left banks, measure carefully the linear deflection of the trim tabs (servo tabs) of the right-hand and left-hand ailerons at maxim deflections of the ailerons, as well as linear maximum deflections o the ailerons proper.

3. If the pilot reports about difficulties in aileron control, chec the aerodynamic compensation elements for pressure tightness.

4. Should considerable deviations from the adjustment standard in th aileron and rudder control systems or bad deformation of adjustable trim tabs be found during the measurements and examination of the aircraft, repair the defects on the rudder or its trim tabs followi the technical data of the aircraft and special notes in the aircraft Service Log, after which perform a test flight.

Correction of Lateral and Directional Instability in Accordance with Pilot's Reports and Measurement Results during Postflight Inspection of Aircraft

On the basis of the pilot's report and results of the measurements taken during the postflight inspection of the aircraft, as well as on the basis of th results of the checking operations indicated in the previous paragraph, elimina the detected faults in lateral and directional stability of the aircraft using following methods.

1. An excessive deflection of the control wheel from the neutral position (above 8°) in lateral balancing of the aircraft is eliminated by creating "scissors" on both ailerons. This is done by deflecting the ailerons within ± 8 mm (Fig. 69), with the control system locked and the control columns in the neutral adjustment position (in this position the control columns are inclined to the right in the clockwise direction by an angle of 8 ± 1°). The "scissors" on the ailerons are created by adjusting the threaded ends of the aileron control system rods located in the wells of the right- and left-hand legs of the main landing gear, bearing in mind that half a turn of the threaded end deflects the aileron by 2.5 - 3 mm.

Note: In creating aileron "scissors" to eliminate control wheel deflections, do not immediately deflect the ailerons by the maximum value of ± 8 mm; deflect the ailerons gradually (creating first "scissors" of, say, ± 2.5 to 3 mm), and check each time their effectiveness in flight.

In determining the deflection angle of the control wheels on the basis of the results of measuring the distance between the marks, bear in mind that 1° of angular deflection of the control wheel corresponds to 0.83-mm linear displacement of the mark along the circumference of the control wheel hub.

The linear deflection of the control wheel to the right or to the left in the air should not exceed 6.7 mm by the marks, which corresponds to a maximum deflection angle of 8° of the control wheel.

2. The loads on the control wheel when banking the aircraft to the right or to the left are equalized by reducing the deflection of the servo tab which goes upward when performing a bank with a smaller effort. If the pilot feels that it is more difficult to bank the aircraft to the left than to the right, it is necessary to reduce the upward deflection of the servo tab of the left aileron which is deflected downwards. At reverse relation of loads on the control column reduce the upward deflection of the right-hand aileron servo tab.

The upward deflection of the servo tabs on the ailerons deflected downwards is reduced by shortening the servo tab control system rods. The thread of the rod ends has a pitch of 1 mm. Permissible shortening of the rods is 0.5 to 3 mm which corresponds to 0.5 - 3 turns of the rod end.

In this case the linear deflection of the servo tabs upward may be reduced to to 15_{-2} mm.

Note: In reducing the upward deflection of the servo tab see that, with the ailerons in the neutral position, the tabs also retain their neutral position.

3. Normal total load on the control column from the ailerons is ensured in the following way.

Aileron control can be made "heavier" with the help of special lids installed in the aileron leading edges and used for regulating the area of through holes in the ailerons (Fig. 70). Opening of the holes makes control "heavier". This is achieved by setting the hole lids in one of the three regulating positions.

The number of holes drilled, as well as the extent to which the holes are opened under one, two or three lids, is determined by the pilot's estimation of the aileron control ease.

Note: In the course of aircraft service aileron control may become "heavier" as the pressure tightness of the elements of the aileron internal aero-

[redacted]

50X1-HUM

dynamic compensator is impaired. Aileron control can be made "easier" by reducing gradually the number of opened holes which are to be plugged one by one on each aileron symmetrically to the aircraft axi (Fig. 71) or by reducing the hole area for which purpose the holes a covered with lids. The hole area should be reduced equally on each aileron and symmetrically with respect to the aircraft axis. After r placement of the internal compensator elements on the aircraft, ail control may become too "easy" and it may be necessary to open the pr viously closed holes or set the lids in the initial position for mak aileron control "heavier".

4. Aircraft tendency to turn spontaneously is eliminated in the following ways:

(a) a turn of the aircraft, which can be counteracted in flight by deflect the rudder trim tab up to 2 mm is eliminated by bending the ground-adjustable trim tab up to 1 mm in the direction of trim tab deflection during flight. The neutral position of the trim tab must be retained;

(b) a turn of the aircraft, which can be eliminated in flight by deflecti the trim tab above 2 mm and displacing the pedals above 40 mm but less than 80 - 100 mm with the aircraft balanced, is eliminated by shifting the neutral position of the rudder trim tab up to 3 mm in the direction of its deflection during flight (Fig. 72). With the trim tab in its new neutral position, the tel tale lamp on the left-hand pilot's instrument board should be on.

To shift the neutral position of the trim tab by 3 mm, the threaded end of the rod connecting the bell cranks on the fin spars with the rudder must be screwed in or out by half a turn.

All additional operations on aircraft controls performed during service should be recorded in the aircraft Service Log.

9. WING FLAP CONTROL

General

The landing flap system is controlled with the aid of electric mechanism

The flap drive electric mechanisms (set МПЗ-3М) are included into a tubul transmission which actuates eight jacks. Each of the two inner and two outer f has two jacks located at ribs Nos 4, 5, 8, and 14 on the right- and left-hand halves of the wing.

The flap position indicators, type УЗП-47, are located on the instrument boards of both pilots and are electrically connected to the transmitter mounte in the transmission and driven by the transmission through the cam of the cam mechanism of the МКВ-2 limit switches. This mechanism switches on the warning which operates if the flaps are not extended during take-off or landing of th aircraft.

The supply circuits to the МПЗ-3М electric mechanisms of the flap drive b the transmission are broken by the mechanisms of the МКВ-11 limit switches.

The flap control system layout (on the right wing outer panel) is shown in Fig.73.

Access Panels for Inspection of Flap Control and Its Units

The units of the wing flap control system are located on the wing rear spar. The power supports of the guide rails are mounted in the tail parts of the rst and second wing detachable sections.

To get at the control system units it is necessary first of all to extend the aps and open the cargo compartment doors.

Access to the electric mechanisms of the МПЗ-3М set, located on the upper nel of the centre plane to the left of the aircraft axis, is possible through e cargo compartment and through the access panel in the fuselage top skin. To ituate the МПЗ-3М electric mechanism by hand, remove the heaters (items 107) ong with the beam on which they are mounted.

Access through the flap control is ensured: in the first wing detachable ction - through the access panels in the top skin and through the access panels the skin of the wing trailing edge above the flaps, as well as through the ts in the skin for the jacks and guide rails; in the second wing detachable ction. - through the cuts and access panels in the skin of the wing trailing edge ove the flaps.

Instructions on Servicing and Checking Control System

1. Flaps retracted:

(a) the flaps should conform to the wing contour. Permissible flap deflec- ions are shown in Fig. 74;

(b) the flap trailing edges should be properly tightened by the rear lock;

(c) the pointer of the main (left) flap position indicator, type УЗП-47, hould read zero;

(d) no twisting of the transmission is permissible. Transmission twisting is termined by the marks with the inscription УПВ (upper stop) made on the left side f the МПЗ-3М set reduction gear body and on the sliding part of the transmission. en the flap is being retracted, the transmission must stop 30 to 180° short of e mark made on the reduction gear body.

2. Flaps completely extended:

(a) the flaps should deflect through an angle of 35 ± 1° or, if linear asurements are taken in points A, Б, and B (Figs 75 and 76), by 1052.5 ± 5, 06.5 ± 5, and 982 ± 5 mm respectively;

(b) the distance between the contact point of the rear pulleys of the guide ail carriages and the rear cut of the rail at ribs Nos 4 and 5 must not be less han 40 mm, and at ribs Nos 8, 11, and 14 must not be less than 45 mm;

(c) the pointer of the main (left) flap position indicator, type УЗП-47, hould read the actual deflection angle of the flaps accurate within ± 1°;

(d) no twisting of the transmission is permissible. Transmission twisting e determined by the marks with the inscription УПН (lower stop) made on the ight side of the МПЗ-3М set reduction gear body and on the transmission sliding art. The transmission must stop 30 to 180° short of the mark on the reduction ear body;

(e) setting the flaps to the maximum extended position must be accompanied by slight knock on the stops of one or several jacks.

[redacted]

50X1-HUM

3. Control system operates on the ground at a circuit voltage of 26 - 28 V;

(a) the time required for extending the flaps with both МП3-3М electric mechanisms operating must not exceed 25 sec., and the current consumed must not exceed 155 A;

(b) the time required for retracting the flaps with both МП3-3М electric mechanisms operating must not exceed 25 sec., and the current consumed must not exceed 160 A;

(c) the time required for extending the flaps with one МП3-3М electric mechanism operating must not exceed 50 sec., and the current consumed must not exceed 80 A;

(d) the time required for retracting the flaps with one electric mechanism operating must not exceed 50 sec., and the current consumed must not exceed 85 A,

4. In breaking the supply circuit to both electric mechanisms of the МП3-3 set when the flaps approach their extreme positions, the mechanism of the MKB-11 limit switches should stop the transmission in positions indicated in Items 1d and 2d. The microswitches must operate simultaneously, permissible difference being 40° of transmission shaft turn.

5. The warning horn should operate within the following ranges of flap deflection angles: from 0 to $19_{-1}°$ and from $23_{-1}°$ to 35 ± 1°. The limit switches of the MKB-2 mechanism should cut off the warning horn within flap deflection angl from $19_{-1}°$ to $23_{-1}°$ and switch it on in all other working positions.

6. All along the flap deflection angle range the УЗП-47 position indicator should read the actual deflection angles of the wing flaps accurate within ± 1°.

<u>Notes</u>: 1. The time required for the system to operate for extension and retraction of the flaps, as well as the current consumed, should be checked five times employing both electric mechanisms of the МП3-3М set simultaneously or each electric mechanism separately.

2. The time of operation of the limit switches of the MKB-11 and MKB-2 mechanisms as well as the readings of the flap position indicat on the instrument board of the left-hand pilot, should be checked by extending and retracting the flaps five times. The testing conditions are to be set in conformity with the data given in the Certificate of the МП3-3М set.

3. The results of the tests described in Items 3, 4, 5, and 6 should be entered in the aircraft Service Log.

7. During extension and retraction the flaps should move without jarring or jerks. In the case of sharp noise check the movement of the carriages.

8. The carriage pulleys with needle bearings should rotate smoothly (without binding).

9. The felt brushes on the covers of the carriage pulleys should always be in good condition; glueing up old brushes and installation of new ones should b done with glue 88.

10. The chrome-plated working surfaces of the rails should be dry and clea

11. During service check regularly the condition of the lubricant, bearing in mind that:

(a) the bodies of the jack heads should be filled with lubricant to 2/3 of their capacity;

(b) the lubricant in the oilers of the transmission bearings, jacks, und on the lugs of the jack sliding nuts in the joints with the flap control horns should be changed in due time;

(c) the rubber covers on the universal joints of the transmission shaft should be filled with lubricant, airtight and tightly clamped by the rings.

12. During service the play and clearances in the aircraft control system should remain within the following limits:

(a) the clearances between the sliding and rotating parts of the flap control system and the structural elements of the aircraft framework must not be less than 3 mm in all working positions of the parts;

(b) the clearances between the rails and the carriage side pulleys must not exceed 1 mm;

(c) the total two-side clearance between the flange rests at the transmission joints located between ribs Nos 3 and 4, 10 and 11, as well as between the faces of the bearing bushes must be 0.5 to 3.3 mm;

(d) the flap play measured at the trailing edges and originating due to the clearance in the worm pair (jack - carriage) must not exceed 5 mm with the flaps in any position;

(e) the diametral clearance between the steel coupling of the transmission shaft and the bronze bush of the bearing must not exceed 0.7 mm;

(f) the transmission spline joints may have a circumferential play of not more than 0.2 mm and a diametral play of up to 0.13 mm;

(g) certain wear of hinges in the universal joints of the transmission is permissible; this wear is due to an increase in the hole diameter and a decrease in the bolt diameter. The clearance in the universal joint must not exceed 0.085 mm;

(h) certain wear of holes and bolts is permissible in the bolt joints of the transmission shafts. The originating diametral clearance must not exceed 0.1 mm.

13. Perform at regular intervals the following checks on the wing flap jacks:

(a) check the torque value on the spline driving shaft which ensures movement of the nut in the horizontal position without jack loading. This value should not exceed 20 kg-cm;

(b) check the angular clearance in the meshed bevel gears. It should not exceed 1° or; when linear measurements are taken, it should not be more than 1.74 mm over an arm of 100 mm;

(c) measure the axial play in the ball joint between the screw and the sliding nut. It should not exceed 0.45 mm;

(d) measure the run-out of the sliding nut. When measured at the eyes of the forked tube, it should not exceed 0.83 mm.

14. The transmission shafts, load-carrying struts, attachment side braces of the guide rails, as well as the guide rails, should be inspected systematically and checked for cracks.

<u>Note</u>: During the examination pay special attention to the edges of the holes for transmission joint flange bolts located between the МП3-3М set and the first jack. To examine the hole edges from both sides of the hole it is necessary to turn off the nuts and knock the bolts out of the hole by 4 - 5 mm.

[redacted]
50X1-HUM

15. The main parts and units of the control system are repaired or replaced when the following defects are discovered:

(a) knocks in the hinges of the universal and bolt joints of the transmissio

(b) deformation and cracks on the lands of the carriage frames;

(c) cracking and exfoliation of the transmission bearing bronze bushes;

(d) deformation of the forked tube of the jack sliding nuts and appearance of dents, scores, and cracks on the tube;

(e) deformation of links of the jack sliding casings and appearance of crack dents, and scores;

(f) cracks and exfoliation on the flanges of the jack limit stops and on the cam surfaces;

(g) deformation of transmission spline joints and chipping of spline working surfaces;

(h) mechanical damage on steel distance sleeves and bronze bushes in the joints between the jacks and the flap pivots, on the hinge joint bolts, carriage rollers and on the bolts of the joints between the transmission shafts and the steel couplings where they slide in the bearings.

Control System Adjustment

Adjustment of the control system which, when operated by the hand drive, must extend the flaps to the given angle, with the sliding nuts of one or several jacks resting on the lower stops, includes adjustment of the limit switches (MKB-11 mechanism) in the supply circuit of the МПЗ-3М electric mechanisms, adjustment of the limit switches (MKB-2 mechanism) in the supply circuit of the warning horn, as well as adjustment of the УЗП-47 flap position indicator.

Adjustment of Limit Switch Mechanisms
MKB-11 and MKB-2

The position of the transmission, with the flaps fully extended, when the sliding nuts of the jacks are on the rear ("lower") stops, is determined by aligment of the notches marked УПН (lower stop) and located on the transmission shaft and on the R.H. side of the МПЗ-3М electric mechanism reduction gear body, whereas the position of the transmission, with the flaps fully retracted, when the sliding nuts of the jacks are on the front ("upper") stops, is determined by aligment of the notches marked УПВ (upper stop) and located on the transmission shaft and on the L.H. side of the reduction gear body.

During adjustment the flaps are deflected manually with the aid of brace bit 9813-120 placed on the hand drive of the МПЗ-3М mechanism after removal of the heaters of item No. 107 along with the beam on which they are mounted.

CAUTION: In adjustment of the MKB-11 limit switch mechanism closely follow the data given in the previous Subsection.

Adjustment of MKB-11 Limit Switch Mechanism Position
in Retracting Flaps

1. Place dial 9813-135 on the transmission shaft and indicating pointer 9813-131 on the attachment bracket of the aileron servo unit (Fig. 77).

2. Open the cover of the MKB-11 limit switch (Fig. 78), slacken six screws securing the cam discs that control the flap retracted position, and connect a tester (a bell or a signal lamp) to the limit switch circuit.

3. Set the flaps to the retracted position according to the [illegible] notches.

4. Give the transmission 3 or 4 revolutions for flap extension.

5. Turn the cams of the discs (in the MKB-11 limit switches) which control flap retraction into a position at which the limit switches break the circuits. The limit switches must break the circuits when the transmission is turned by an angle not exceeding 40°. Then tighten the attachment screws of the cam discs.

6. Fully extend the flaps and then retract them again from the МПЗ-3М electric mechanisms. In extending and retracting the flaps check the operation of the limit switches and the position of the flaps during retraction, as well as the position of the transmission by the УПВ (upper stop) notches.

Notes: 1. If the flaps cannot be fully retracted, determine the number of transmission shaft revolutions by which they are short of the required position and readjust the limit switches. To this end, reduce the number of transmission revolutions made during the preliminary adjustment by the number of revolutions required for putting the flaps in the correct position.

Adjustment of the MKB-11 limit switches for flap retraction is considered satisfactory, if during three retractions of the flaps by means of two МПЗ-3М electric mechanisms, the requirements under Items 1 and 4 of Subsection "Instructions on Servicing and Checking Control System", Section 9, are complied with.

2. After extending or retracting the flaps by means of two МПЗ-3М electric mechanisms make a 5-min. interval to allow the mechanisms to cool down; when the flaps are retracted or extended by means of one electric mechanism, make a 10-min. interval.

3. After five cycles (extension—retraction) performed from two МПЗ-3М electric mechanisms or after two complete cycles performed from one electric mechanism, make an interval to allow the electric mechanisms to cool down completely.

7. After adjustment make notches with inscriptions BB (upper cutout) on the transmission sliding portion and on the left-hand side of the reduction gear body of the МПЗ-3М set to fix the position when the tester (a bell or a signal lamp) cut into the circuit indicates the breaking moment of the limit switch.

Adjustment of Position of MKB-11 Limit Switch Mechanism
in Flap Extension

1. Ease off six screws securing the cam discs that control the flap extended position and connect a tester (a bell or a signal lamp) to the circuit of the limit switches.

2. Set the flaps in the extended position by the УПН (lower stop) notches.

3. Give the transmission 3 or 4 revolutions for flap retraction.

4. In the MKB-11 limit switches turn the cam discs controlling flap extension to a position at which the limit switches break the circuits. The circuits of the upper and lower electric mechanisms should open when the transmission is turned to an angle not exceeding 40°. Then tighten the cam disc screws.

5. Retract the flaps and extend them once more with the aid of the electric mechanisms. In extending and retracting the flaps check the operation of the limit switches, the flap deflection angle, and the position of the transmission with respect to the УПН (lower stop) notches.

[redacted]

<u>Notes</u>: 1. If the flaps cannot be fully extended, determine the number of transmission revolutions by which they are short of the required position and readjust the limit switches. To this end, reduce the number of transmission revolutions made during the preliminary adjustment by the number of revolutions required for putting the flaps in the correct position.

Adjustment of the MKB-11 limit switches for flap extension is considered satisfactory if during three extensions of the flaps by means of two MII3-3M electric mechanisms a slight knock is heard at least on one of the jacks when the flap reaches the lower stop and if the requirements under Items 1 and 4 of Subsection "Instructions on Servicing and Checking Control System", Section 9 are complied with.

2. For intervals between the flap operating cycles (to cool the electric mechanisms) see the Notes in the previous Subsection.

6. After adjustment make notches with inscriptions BH (lower cutout) on the transmission sliding part and on the right-hand side of the reduction gear body of the MII3-3M electric mechanisms to note the position when the tester (a bell or a signal lamp) indicates the breaking moment of the limit switches.

7. Cut the tester (a bell or a signal lamp) out of the limit switch circuits, lock finally the screws securing the cam discs that control the extension and retraction of the flaps, close the cover of the MKB-11 limit switches housing, lock it and seal.

8. Remove dial 9813-135 from the transmission shaft and indicating pointer 9813-131 from the servo unit bracket.

Adjustment of MKB-2 Limit Switch Mechanism

1. Before attaching the MKB-2 switch on the transmission (before drilling the hole for the attachment bolt in the case of shaft replacement), place the linkp roller of the УЗП-47 flap position indicator into the recess of the cam on the axle of its worm gear drive and set the flaps in the fully retracted position.

2. Deflect the flaps by an angle of 19_{-1}o according to the protractor.

3. Remove the cover of the MKB-2 limit switch, connect the tester (a bell or a signal lamp) to the circuit, release three screws securing the cam disc of the signal horn circuit and turn the disc to a position at which the circuit opens (as indicated by the tester).

4. Place the flaps at an angle of 23_{-1}o according to the protractor.

5. Release the three screws securing the second cam disc and turn it to a position at which the restrictor closes the signal horn supply curcuit (also determined by the tester). This done, tighten the disc screws, put the switch cover in place, lock and seal it.

6. Check the operation of the MKB-2 switches by extending and retracting the flaps three times by means of the MII3-3M electric mechanisms. Adjustment of the limit switches should ensure that the signal horn is cut out when the flaps are deflected through an angle of 19_{-1}° to 23_{-1}° and cut in in all the other positions of the flaps.

Adjustment of УЗП-47 Flap Position Indicator

1. Retract the flaps.
2. Remove the cover from the linkage of the УЗП-47 indicator transmitter.
3. Back out the axial screw securing the УЗП-47 indicator linkage carrier.

4. Align the pointer of the indicating instrument on the L.H. pilot's board with division "0" on the instrument dial, for which purpose turn the hexahedron of the transmitter axle of the УЗП-47 indicator.

5. Secure the axial attachment screw of the УЗП-47 indicator carrier on the transmitter axle. Check to see that the carrier of the УЗП-47 indicator transmitter, when turned clockwise, does not overlap or thrust against the inner stop of the transmitter within angles of 90° to 100°. If the carrier travel is limited, readjust the indicator.

6. Check the instrument on the L.H. pilot's board for correct readings by deflections of the flap. When performing this check, employ linear measurements to define exactly the flap deflection angles for which purpose refer to Table 9.

<u>Note</u>: Less accurate adjustment of the УЗП-47 indicator can be performed with the aid of a protractor fitted with a rubber attachment piece. The protractor should be so mounted that the plane of its dial is located in the plane of the flap ribs (Fig. 79).

The difference between the readings of the instrument on the L.H. pilot's board and the actual flap deflection angle must not exceed ± 1°.

<u>Note</u>: In case the difference between the instrument readings and the actual flap deflection angles determined by linear measurements exceeds ± 1°, replace the cam of the MKB-2 limit switch.

The main instrument serving to determine the position of the wing flaps is the УЗП-47 indicator arranged on the board of the L.H. pilot. Should the readings of the УЗП-47 indicator on the R.H. pilot's board considerably differ from those of the L.H. pilot's board, calibrate the former in accordance with the latter.

Table 9

Angular Deflections of Flaps and Their Corresponding Linear Deflections as Measured at Reference Point B
(Fig. 75)

Flap deflection angle, degr.	Flap linear deflection, mm	Flap deflection angle, degr.	Flap linear deflection, mm	Flap deflection angle, degr.	Flap linear deflection, mm
1	29.5	13	379	25	725
2	58.5	14	408	26	753.5
3	88	15	437	27	782
4	117	16	466	28	810,5
5	146.5	17	495	29	839
6	176	18	524	30	867.5
7	204.5	19	562.5	31	895.5
8	234	20	581.5	32	923.5
9	263	21	610	33	951.5
10	292	22	639	34	979
11	321	23	668	35	1006.5
12	350	24	696.5		

[redacted]

50X1-HUM

CHAPTER V

LANDING GEAR AND HYDRAULIC SYSTEMS. CARE AND MAINTENANCE

1. LANDING GEAR

Landing Gear Basic Specifications

Landing Gear Nose Leg (Fig.80)

Full travel of the shock absorber rod	450 ± 2 mm
Shock absorber hydraulic fluid	AMT-10 mixtur
Amount of hydraulic fluid in the shock absorber (when charged up to the level of the oil drain pipe and with the shock absorber fully compressed)	about 10,000 cu.
Nitrogen pressure in the shock absorber when the latter is released at aircraft normal all-up weight	15^{+1} kg/sq.cm.
Permissible compression of the shock absorber at any aircraft all-up weight	200 to 300 mm
Collapsible strut deflection	8 to 10 mm
Elevation of the axis of side links 3 (Fig.83) of the strut lock relative to the axis of rotation of crank 5, with the lock closed and the links tightened	0.5 to 1 mm
Clearance between nut 1 (Fig.84) and the shoulder of bush 3 on the actuating cylinder, with the leg extended	2 to 3 mm
Clearance between nuts 4 and 5 of the actuating cylinder (See Fig.84)	not less than 0.
With the wheels in the neutral position, the additional damper charging indicator at any ambient air temperature must project beyond the end face of the body tip	not in excess of
or must be short of it	not in excess of
Angle of wheel turn to the left and to the right from the neutral position	$40^{\circ}{}^{+30'}_{-1^{\circ}}$
Nominal air pressure in the wheel tubes	6 kg/sq.cm.
Wheel tube compression at parking	30 ± 5 mm

Backshift of the wheel axle when the aircraft is placed in the line-of-flight position (the backshift is measured from the plumb dropped from the strut axis of rotation)	300 ± 8 mm
Total backlash in the rigid connections (of the follow-up system) between the reducer on frame No.13 and the bell crank on the shock absorber cylinder pivot	not in excess of 1 mm (the backlash is checked by means of special device No.6360/0279)

Landing Gear Main Leg (Fig.81)

Full travel of the main shock absorber rod	350 ± 2.5 mm
Shock absorber hydraulic fluid	AMГ-10 mixture
Amount of hydraulic fluid in the shock absorber (when charged up to the level of the charging connection hole, with the shock absorber completely compressed)	about 17,000 cu.cm.
Nitrogen (Specifications ТУ МХП 4280-54, 2nd grade) pressure in the shock absorber when the latter is released	36^{+1} kg/sq.cm.
Shock absorber compression at parking at any take-off weight of the aircraft	230 to 280 mm
Nominal air pressure in the wheel tubes	8.5 kg/sq.cm.
Wheel tube compression at parking at any take-off weight of the aircraft	80 ± 5 mm
Stabilising shock absorber:	
- rod full travel at compression	425 ± 2 mm
- rod full travel at extension	135 ± 1 mm
- hydraulic fluid	AMГ-10 mixture
- amount of hydraulic fluid in the shock absorber (when charged up to the level of the charging connection, with the shock absorber inclined towards the aircraft tail, with the connection looking forward at an angle of 18°)	800 cu.cm.
- nitrogen pressure during charging, with the shock absorber released	75 to 80 kg/sq.cm.
Leg stagger when placing the aircraft in the line-of-flight position (as measured from the plumb dropped from the axis of rotation of the frame-to-wing attachment fitting to the bogey attachment hinge)	290 ± 7 mm
Bogey tilt (forward) in relation to the horizon line when placing the aircraft in the line-of-flight position	4°10' ± 1°30'
Permissible deflection in the shock absorber-to-frame attachment hinge	± 5 mm

Tail Skid (Fig.82)

Shock absorber full travel	185 mm
Hydraulic fluid	AMT-10 mixture

[redacted]

50X1-HUM

Amount of hydraulic fluid in the shock absorber (when charged up to the level of the charging connection hole, with the shock absorber completely compressed)	1800 cu.cm.
Nitrogen pressure in the shock absorber when the latter is released	10 ± 0.5 kg/sq.cm.
Deflection (directed towards the aircraft tail) in the connection of the forked brace with the shock absorber ...	28_{-5} mm
Permissible clearance between the skid in the retracted position and the fuselage contour	2 mm

Adjustment of Landing Gear Nose Leg

Adjustment of Strut Lock
(See Fig.83)

The strut lock should be adjusted in case the clearance determining elevation of the axis of side links 3 in relation to the axis of rotation of crank 5 and adjusted by means of eye 7 on the rod of lock cylinder 6 is other than 0.5 to 1 mm. If this clearance is ensured the rod of hydraulic cylinder 6 should bear against the stop, i.e. it should be fully drawn out, while the strut (with the landing gear extended) should be deflected by 8 to 10 mm

Notes: 1. Deviation from the size of 0.5 - 1 mm may cause the landing gear leg to collapse spontaneously.
2. To check the size of 0.5 - 1 mm there are special holes in the centre of link 3 and corresponding holes in the centre of crank 5.
3. The deflection (8 to 10 mm) of the strut is measured by special device No. H9998-275 included in the spare set.
4. To adjust the strut lock the aircraft should be jacked.

Adjustment of Hydraulic Actuating Cylinder
(See Fig.84)

The hydraulic actuating cylinder of the landing gear nose leg (not provided with a lock) is adjusted so as to ensure proper straightening of the leg strut when the leg is extended and correct up-locking of the leg during retraction.

The actuating cylinder is adjusted by nut 1 by means of which the amount of the rod travel is changed during the extension of the leg and by eye 2 which regulates the total length of the actuating cylinder during the retraction of the leg.

To ensure reliable operation of the up-lock, the length of the actuating cylinder with the leg completely retracted must ensure lifting of the leg hinge till it rests against the surface of the lock body eye.

To ensure full travel and proper locking of the strut during leg extension there must be a clearance of 2 to 3 mm between nut 1 and the shoulder of bush 3 in the head of the cylinder. To maintain this clearance during service, see that the clearance between check nuts 4 and 5 is not less than 0.3 mm.

Adjustment of Door Actuating Mechanism
(Fig.85)

The door actuating mechanism is adjusted so that with the leg retracted the doors do not project beyond the fuselage well contour and there is a clearance of 10 mm at least between the doors and the landing gear wheels.

The doors are adjusted by eccentrics 1 mounted on link motions 2 and controlled by eyes 4 on rods 3.

The adjusting eccentrics are mounted so that at the moment the strut roller (See Fig.83, Ref.No.8) emerges from link motion 2, door actuating mechanism rods 3 thrust against levers 5. The doors in the retracted position are made tight by means of adjustable eye 4 on rods 3.

Note: Excessive shortening of rods 3 might bring about wedging of the wheels by the doors and prevent the leg from being up-locked.

If during extension or retraction the wheels catch at the doors, it is necessary to accelerate the opening of the doors. For this turn lever 5 in the direction of the aircraft tail by one slit relative to the link motion axis and respectively shorten rods 3 by means of adjustable eye 4.

Note: The hydraulic actuating cylinder and the door actuating mechanism should be adjusted simultaneously.

Adjustment of Lock
(Fig.86)

The lock should be adjusted so that with the lock closed the clearance between the head of adjusting screw 1 and rod 4 amounts to 1 mm.

If this clearance is not ensured, the lock cannot be closed; the clearance exceeding 1 mm, the lock cannot be opened.

The upper plane of hook 3 with the lock closed should project by 0.5 ± 0.1 mm in relation to the lock body stop. If this condition is not observed the leg will fail to get locked.

Adjustment of Follow-Up System
(Fig.87)

In the follow-up system there must be ensured clearances between the end faces of slide 1 in the extreme positions along its travel and the vertical planes of the aperture in shock absorber transverse member 2.

The system is adjusted by changing the length of control rod 3 when screwing its upper eye 4 in or out. After the adjustments have been made, employ device 6350/0279 to check the total clearance in the links from the reducer to the bell crank on the shock absorber pivot. Its value must not exceed 1 mm.

Adjustment of Landing Gear Main Legs
(Fig.81)

The landing gear main legs should be adjusted:

(a) when the amount of the landing gear stagger is changed;
(b) if the angle of the bogey tilt is changed;
(c) if deflection in the hinged connection of the shock strut with the landing gear attachment frame is changed;
(d) in case the landing gear fails to get up-locked.

The landing gear stagger (290 ± 7 mm) is adjusted by changing the length of strut 2 by means of upper eye bolt 3.

The bogey tilt angle ($4^{o}10' \pm 1^{o}30'$) is adjusted by changing the length of control rod 6 by means of the lower eye bolt on this control rod.

Deflection in the hinged connection of the shock strut with the landing gear attachment frame (± 5 mm) is adjusted by hydraulic actuating cylinders 4, whose length is changed by screwing the eye bolts on the rods of these cylinders in or out. The deflection should be checked by device No.626.

[redacted]

The landing gear up-locking is adjusted by struts 2 and hydraulic actuating cylinders 4.

In the completely retracted position strut eye 8 must be promptly up-locked. If the eye fails to get up-locked provided the lock is in good repair, lengthen strut 2 and shorten actuating cylinders 4 (if strut lengthening alone is not sufficient). Take care to see that the landing gear stagger and the deflection of the hinged connection of the shock absorber with the landing gear attachment frame adjusted previously are not disturbed. The landing gear stagger and the hinged connection deflection should be within their tolerance limits.

Excessive shortening of control rod 6 may hinder up-locking the leg as the bogey will rest too early against the rubber stop on the lower torsion link and will wedge the mechanism. This being the case, lengthen control rod 6 by means of its lower eye bolt so that, with the landing gear in the retracted position, the bogey rests against the rubber stop without pressing it. When doing so, take into consideration that, with the landing gear extended, the angle of the bogey tilt should be within its tolerance limits.

With the landing gear extended, both actuating cylinders must get locked by the ball locks simultaneously.

The landing gear main leg attachment lock is adjusted in the same way as the nose leg attachment lock.

Adjustment of Door Actuating Mechanism (Fig.88)

The doors of the landing gear main leg wells are closed during the retraction and extension of the legs by means of a mechanism with two link motions.

With the landing gear retracted, the door tightness may be increased by shortening all the four control rods connecting the reducers with the doors.

Take into consideration that excessive shortening of the door control rods might prevent up-locking the landing gear legs.

For preliminary adjustment of the door actuating mechanism the control rods, levers and link motion arms must have the following initial length:

(a) control rods: Ref.No.2 - 698 mm; Ref.No.11 - 840 mm; Ref.No.6 - 1002 mm; Ref.No.8 - 1035 mm, and Ref.No.10 - 840 mm;

(b) the arm of lower link motion 1 - 145 mm; the arm of upper link motion 7 connected to control rod 6 - 132 mm, and the arm of upper link motion 7 connected to control rod 8 - 135 mm;

(c) lever 3 of the front reducer connected to control rod 2 - 156 mm; lever 5 connected to control rod 6 - 135 mm, and lever 9 of the rear reducer connected to control rod 8 - 157 mm.

With control rods 2 disconnected from lower link motion 1 and spring 3, a correctly adjusted mechanism should freely and without jamming move from one extreme position to the other, that is to the door open and closed positions, the force applied to the door ends amounting to 20 - 30 kg.

After the preliminary adjustment of the mechanism for closing and opening of the doors, it is necessary to retract the landing gear by hand without connecting control rod 2 and spring 3, by means of the hand pump of the ground stand for hydraulic tests or the hand hydraulic pump, type HP-01, and adjust the roller on the landing gear bogey so that it enters the jaw of upper link motion 7.

The bogey roller entering the link motion jaw is adjusted by resetting the bracket with the roller over the oval hole in the bracket on the landing gear bogey.

When the roller emerges from the link motion the doors must completely open while the reducer bell cranks must reach the stops.

After the bogey roller entering and emerging from the jaw of upper link motion 7 have been adjusted, connect control rod 2 to lower link motion 1 adjust the bogey roller for entering and emerging from the jaw of the lower link motion.

Note: To avoid damage to disconnected control rod 2, when adjusting the roller entering the upper link motion jaw, tie the control rod so that it cannot catch at other structural elements during movement.

During the operation of the door actuating mechanism the rollers must be in contact with the link motion throughout their entire width all the time. The displacement of the roller axis in relation to the link motion axis must not exceed ± 2 mm.

During the landing gear retraction and extension there must be a clearance of not less than 30 mm between the wheels and the doors.

The adjusted mechanism must be checked by opening and closing the doors after spring 3 has been connected to it.

With the landing gear legs retracted, the doors must be closed with a certain degree of tightness which is regulated by the length of the control rods and levers on the reducers.

With the landing gear legs extended, loose fit between the doors and the fairing contour is permitted. The distance between the door and the fairing contour over the joint should be from 5 to 10 mm.

During flight with the landing gear extended, the permissible distance between the main doors and the fairing contour does not exceed 30 mm. This should be checked by examining the doors from the gunner's cabin.

Note: After the final adjustment of the door actuating mechanism retract and extend the landing gear legs once or twice from the main hydraulic system.

Adjustment of Landing Gear Main Legs Extension Mechanical Indicator

(Fig.89)

To adjust the main legs extension mechanical indicator match the moment of the emerging of indicator pin 1 (on the upper skin of the wing) with the moment of complete extension of the main legs and set the end-piece of eccentric 2 so that at the moment of the landing gear complete extension the end-piece presses off pawl 4 of quadrant 3.

To set the end-piece in this position loosen the coupling bolt securing the eccentric on the axle and set the end-piece in the required position. Then tighten up the coupling bolt.

Adjustment of Tail Skid

(Fig.82)

The adjustment of the tail skid should ensure the following: in the RETRACTED (УБРАНО) position - panel 1 should keep within the fuselage contour and in the EXTENDED (ВЫПУЩЕНО) position - the hinged connection of the journals

[redacted]

50X1-HUM

of shock absorber 6 with fork 7 should deflect backward by 28_{-5} mm. In the event of this deflection eye 5 of extension rod 3 rests against the rubber buffer on frame No.66. This is achieved by screwing eye 5 in and out, that is by changing the length of the МП-250 electric mechanism control rod. The deflection in the hinged connection of the journals of shock absorber 6 with fork 7 should be checked by means of device No. 96833.

Notes: 1. When applying force by hand, ± 10-mm resilient play of the sho absorber is permitted in the journals.
2. With the skid retracted, the permissible protrusion of its pen beyond the fuselage contour does not exceed 2 mm.

Adjustment of Landing Gear and Tail Skid
Light Signalling System

The adjustment of the light signalling system indicating the position of the landing gear nose leg consists in adjusting the moment of operation of th limit switches, types BK-2-140B and BK-44.

The operation of the switch, type BK-2-140B, installed on the strut of th landing gear nose leg must cause the lamp to flash which indicates the landin gear leg extension. The operation of the switch, type BK-44, installed on the landing gear nose leg up-lock indicates the retraction of the leg.

The limit switch, type BK-2-140B, must operate at the moment the leg is fixed by the lock in the completely extended position in which the strut deflection reaches the required value and the strut gets locked.

The moment of operation of the BK-2-140B switch is adjusted by screw 2 (Fig.90) as follows:

(a) unscrew check nut 3 and turn out screw 2 so that the switch rod can move quite freely;

(b) turn on screw 2 so that the switch operates with a click;

(c) turn on screw 2 by 2.5 or 3 turns more corresponding to a length of 2 or 2.5 mm and lock it. After this the rod must have a free travel of 2.5 or 3 mm.

The limit switch, type BK-44, of the landing gear nose leg must operate at the moment the leg gets up-locked and lever 6 (See Fig.86) presses its rod.

The moment of operation of the BK-44 switch is adjusted by changing the length of its rod when screwing the latter in or out.

The moment of operation of the switches, types BK-44 and BK-2-140B, is indicated by a click and flashing of the warning lamp.

To adjust the switch, type BK-44, turn out the screw of its rod by 1.5 or 2 turns.

After the switch has operated (clicked) the rod must not project beyond the switch by 1 or 1.5 mm. This done, lock the rod screw.

In this position the rod must have a free travel of 4 or 5 mm (the travel of the auxiliary device button being taken into consideration).

The operation of the landing gear main legs light signalling system is ensured by the adjustment of the limit switches, type BK-44, located on the transverse members of the shock absorbers (for controlling the main leg extension) and on the up-locks (for controlling the main leg retraction).

The operation of the switches, type BK-44, controlling the landing gear main leg extension must take place at the moment the actuating cylinders are locked by the ball locks.

Note: The correctness of locking the actuating cylinders by the ball locks is determined (with the main leg extension and retaction system adjusted) by deflection in the hinged connection of the shock absorber with the landing gear attachment frame. This deflection must be equal to ± 5 mm.

The operation of the switches, type BK-44, controlling retraction of the landing gear main legs must take place at the moment the legs become up-locked and levers 6 (See Fig.86) press the switch rods.

The moment of operation of the main leg switches, type BK-44, is adjusted in the same manner as that of the nose leg switch, type BK-44. The additional means of the switch adjustment, with the landing gear legs extended, is adjusting screw 3 (Fig.91) mounted on the lever bracket of the control rod tilting the landing gear bogey.

The adjustment over, the switch adjusting screws must be locked with nuts and wire, then sealed and painted red with enamel A-67, while the rod nuts should be cottered, the cotter pin ends being spread along the circumference. The threaded portion of the rod screw should be also painted red with enamel A-67. The pilots are not provided with the light signalling system indicating the position of the tail skid. The tail skid is controlled only in the RETRACTED position by the light signalling system in the rear cabin (by one lamp in the electric panels of the gunner and the gunner-radio operator). This light signalling system is not adjusted. The limit switch, type BK-44, mounted on the left-hand side of the landing gear nose leg up-lock switches on the electric mechanism , type МП-250, for retraction and extension of the tail skid.

The extreme positions of the tail skid during retraction and extension are ensured by the МП-250 electric mechanism.

The moment of operation of the BK-44 switch connected to the МП-250 electric mechanism is adjusted in the same manner as that of the BK-44 switches of the landing gear nose and main leg light signalling system.

Notes: 1. The moment of operation of the light signalling system limit switches of the landing gear nose leg (in the retracted and extended positions) and that of the main legs (in the retracted position only) can be adjusted both when the aircraft is on the landing gear wheels and when it is jacked.
2. The moment of operation of the light signalling system switches of the landing gear main legs in the extended position must be adjusted only when the aircraft is on the wheels. If this adjustment is made with the aircraft jacked, the switch rods will move from the pressure levers due to backlash in the landing gear joints and the warning lamps will go out or blink during taxiing when the aircraft is on the wheels.

Wheel Operating Instructions

The bogeys of the landing gear main legs have eight wheels, 1100x330B. Each of the wheels is provided with two hydraulic brakes. The nose leg has two wheels, 900x275B.

The compression of the landing gear wheel tubes is measured as follows:

(a) on the nose leg wheels - by the distance from the parking ground to the lower point of the outer contour of the wheel rim along the vertical line passing through the wheel axle. With the wheel tube compressed by 30 mm, this distance is equal to 82 ± 5 mm;

(b) on the main leg wheels - by the distance from the parking ground to the lower point of the outer contour of the brake collar along the vertical line passing through the wheel axle. This distance must be equal to 262 ± 5 mm when the wheel tube is compressed by 80 mm.

The difference in the amount of air pressure in the wheel tubes must not exceed 0.25 kg per sq.cm.

It is not recommended to release pressure from warmed wheel tubes as, with further cooling, their pressure will decrease below the rated value.

[redacted]

50X1-HUM

During circular flights with 30-min. intervals between landings and with application of brakes, during take-off under side wind conditions, and during continuous taxiing with brakes applied, the wheels might get overheated and fr

In these cases when the wheel brakes are applied with short intervals and there is not enough time for the brakes to cool down, take particular care of the condition of the wheels. The wheel brake collar temperature must not rise above 300°C (the temperature of the brake collar is determined by the colour of temperature indicating rods).

It is permitted to perform take-offs and landings with brakes applied in the following cases only:

(a) during circular flights with the landing gear extended – for not less than 10 min. so as to cool down the wheels;

(b) in case the landing load on the wheel and landing speed are not in excess of those indicated in the Pilot's Instructions;

(c) during landing run – not earlier than 5 sec. after the nose leg wheels touch the ground;

(d) if the ambient air temperature is not in excess of 20°C.

If the ambient air temperature exceeds 20°C, if the length of the runway does not allow to apply the brakes with delay (5 sec. after the nose leg wheels touch the ground), and if in flights the pilot is to master take-off and landing with retraction of the landing gear, increase the intervals between subsequent landings so as to keep within the permissible temperature range for the wheels.

In winter conditions the interval between subsequent take-offs and landings can be reduced as compared to the recommended interval (10 min.) while the number of subsequent take-offs and landings can be increased provided the wheel temperature is kept within the permissible limits.

If after each landing the wheels are cooled down with water or compressed air approximately to the ambient air temperature, it is permitted to increase the number of subsequent take-offs and landings.

During service regularly check the clearance between the brake shoes and brake collars with the wheels released. This clearance must be not less than 0.5 mm.

In case this clearance is less than 0.5 mm or equals zero (this might take place as a result of brake jamming or expansion of the expander tube), drain a certain amount of brake fluid through the drain plugs and recheck the clearance. In case the clearance is still less than 0.5 mm, replace the expander tube.

The wheel brake shoes should be replaced if their wear in the radial direction exceeds 5 or 6.5 mm and the thickness of the worn out shoe over the edges is equal to 11.5 mm.

Replace all the worn out brake shoes by a set of new ones. New shoes should freely move in the grooves of the brake cups. The brake with new shoes should freely enter the wheel brake collar. When the brake is completely fixed but not connected to the hydraulic system, the clearances between the shoes and the collar should be not less than 0.5 mm.

When disconnecting the pipe lines of the brake hydraulic system, see that the hydraulic system is clean and that no fluid gets onto the brake shoes and collars.

When dismantling the wheels and carrying out routine maintenance operations check to see that the bolt connections of the brake collars are properly tightened up. Loose nuts should be tightened up by means of a standard wrench.

Clamping nuts on the axle of the landing gear main leg wheels should be first tightened up till clearance in the bearings is taken up and braking is felt when the wheel is rotated by hand, then the nuts should be unscrewed by 1/3 of a turn so as to obtain the required operating clearances in the bearings.

At the start, when testing the engines, when examining the aircraft, and in other cases it is permitted to apply brakes at parking for not more than two hours. When doing so do not apply the brakes if the wheel brake collars are hot.

Charging Landing Gear Leg Shock Absorbers

The shock absorbers of the nose and main legs are charged with commercial nitrogen till the initial pressure is obtained as indicated in the landing gear specifications (See "Landing Gear Basic Specifications" above). The initial pressure is checked by means of a special device on the non-compressed shock absorber.

Parking compression values of the shock absorbers are also given in the landing gear Specifications.

Notes: 1. When checking the amount of shock absorber compression during parking, it is necessary to take into consideration possible jamming of the shock struts. To avoid this swing the aircraft slightly.
2. Each time when the ambient air temperature drops check all the landing gear shock absorbers for compression and, if necessary, charge them additionally until the required pressure is obtained.
3. Take into consideration that during parking pressure in the stabilising shock absorbers depends on the general compression of the shock struts.

The shock absorber compression is checked by the rod face and the dimensions given in Fig.92.

The initial pressure in the stabilizing shock absorbers and in the tail skid shock absorbers (See "Landing Gear Basic Specifications" above) does not depend on the aircraft take-off weight.

Lubrication

All the hinged connections provided with oil cups should be lubricated with oil, grade ЦИАТИМ-201, by means of a grease gun.

The hinged connections of the landing gear frame with the wing units, the bogey-to-shock absorber attachment fitting, the hinged connections of the landing gear main leg strut, and the hinges of the nose leg strut lock should be also covered with oil, grade ЦИАТИМ-201.

Polished surfaces of the shock absorber rods, actuating cylinders and shimmy dampers should be covered with a thick layer of petrolatum or gun grease. Before each flight this grease should be removed.

The rod of the cylinder of the landing gear nose leg strut lock, the slide shaft in the transverse member of the nose leg shock absorber, the sleeves of the slide and the up-lock rods should be covered with petrolatum.

The wheel bearings should be smeared with lubricant, grade HK-50, in winter and summer. Fresh lubricant should be applied to the bearings after every 50 landings.

Each time when applying fresh lubricant to the wheel bearings or when the wheels are removed for some other reason, it is necessary to check the condition of the bearings; in case some damage is detected, replace the bearing.

[redacted]

50X1-HUM

The diagrams of landing gear lubrication are presented in Figs 93, 94, and 95.

Faults and Remedies

Fault	Cause	Remedy
1	2	3
1. The landing gear legs fail to get up-locked with the actuating hydraulic system operating normally	1. Wedging of the door actuating mechanism due to the fact that when moving during the leg retraction the doors come in contact with the wheels	Jack the aircraft and check the adjustment of the door actuating mechanism
	2. The up-locks fail to open	Examine the landing ge up-locks and, if they are locked, unlock them
	3. During the landing gear extension the up-lock rod is jammed in the guide bush and the hook (latch) remains pressed off	Retract the landing ge legs from the ground st for hydraulic tests and force out the rod comple ly. Measure the diamete of the rod near the mush-room-shaped tappet which must be equal to $12X_3$. I the rod diameter exceeds this value, clean the r with emery cloth so as t obtain the required dim sions. This done, relea pressure and check to se whether the rod properly returns to the initial position. If the rod fai to do so, remove and ch the lock
	4. Pressure in the stabilising shock absorber is insufficient	Charge the stabilisi shock absorber to a nor pressure of 75 to 80 kg per sq.cm.
	5. Jamming of the bogey rotation hinge on the shock absorber	Lubricate the hinge through the oil cups i the rod head eyes. If th fault persists after th lubrication, disassemb the hinge and examine i parts
2. Nose leg vibration	1. The throttle valve fails (hydraulic fluid leaks through the valve)	Remove the valve and check it on the hydrauli test stand
	2. One of the dampers fails due to:	
	(a) wear of the packing on the piston	Remove the damper in question and send it for repair
	(b) breaking of the piston from the rod	Remove the damper and send it for repair
	(c) penetration of air into the damper	Release the air
	(d) leakage in the additional damper and insufficient amount of hydraulic fluid in it	Remove the damper and replace the packings
	3. Axial play in the torsion link joints	Eliminate the play by fitting washers
	4. Increase in the radial play in the pivot clamp	Replace the bush in the clamp
	5. Play in the turning mechanism joint	Replace the links
	6. Considerable axial play in the bearings of the landing gear attachment journals	Mount new bushes with enlarged shoulders in the fuselage units. File the shoulders so as to obtain normal axial play of 0.1 to 0.4 mm

2. HYDRAULIC SYSTEMS

General

The aircraft is provided with the main and brake hydraulic systems.

Both hydraulic systems have a common line of air boosting and tank drainage which produces initial pressure thus ensuring normal conditions for the operation of the high-pressure pumps.

The main and brake hydraulic systems are composed of three principal groups of units connected to one another by means of pipe lines and flexible hoses:

(a) oil delivery units;
(b) units distributing and regulating the oil flow;
(c) units converting oil pressure into mechanical energy.

The key diagrams of the main and brake systems are presented in Fig.96.

The systems use oil (mixture), grade AMT-10, as pressure fluid. The total capacity of the main and brake hydraulic systems equals 115 to 120 lit.

The main hydraulic system (Fig.97) is used for normal (non-emergency) extension and retraction of the landing gear nose and main legs, for opening and closing of the bomb-bay doors, and for turning the wheels of the landing gear nose leg.

It consists of the oil delivery lines, control lines, drainage and boosting lines.

[redacted]

50X1-HUM

The delivery lines are divided into high- and low-pressure lines; the control lines bring into operation the following units:

(a) landing gear (retraction and extension);

(b) bomb-bay doors (opening and closing);

(c) landing gear nose leg wheels (turning to the left and to the right).

Pressure in the main hydraulic system is built up by high-pressure pumps which are driven by the aircraft engines, or by the HP-01 hand pump or ground hydraulic test stand 3783, with the engines at standstill.

Note: Landing gear emergency retraction and extension and emergency closing of the bomb-bay doors are performed from the brake hydraulic system.

The brake system (Figs 98 and 99) is used for normal (main) and emergency braking of the landing gear main leg wheels, for emergency retraction and extension of the landing gear legs, and for emergency closing of the bomb-bay doors.

The system consists of the oil delivery lines, control lines, and return, drainage and boosting lines.

The delivery lines, as in the main system, consist of low- and high-pressure lines, while the control lines bring into operation the following units:

(a) landing gear main leg wheels during normal (main) automatic braking and during emergency braking (downstream of the pressure reducers this part of the line belongs to the normal brake system as well);

(b) landing gear during emergency retraction and extension of the legs;

(c) bomb-bay doors as an auxiliary means of closing the doors.

Pressure in the brake system is built up by means of a pump actuated by an electric motor. In emergency braking power is supplied by the hydraulic accumulator fed by the brake system pump.

The schematic diagram of pump drainage and tank boosting is presented in Fig.100. Surplus pressure in the tanks is built up by the air taken from the eighth stages of the compressors of both engines. The required amount of boosting is maintained by the pressure regulator within 0.9 - 1.1 kg per sq.cm. The drain tank has a capacity of 40 ± 2 lit. and is used as a reservoir for draining excessive oil in case the tanks of the brake and main systems are overflown.

Main System Specifications

Total capacity of the system tank	34 lit.
Amount of oil filled into the tank after the system units and pipe lines have been filled with oil	20 lit.
Operating pressure in the delivery lines maintained by the high-pressure pumps at nominal r.p.m. and when their output changes from zero to 28 lit. per min. ...	150 ± 7.5 kg/sq.cm.
Nitrogen pressure in the hydraulic accumulator gas chamber during charging and with no pressure in the system	120 ± 3 kg/sq.cm.
Amount of oil in the hydraulic accumulator hydraulic chamber (at a pressure of 150^{+7}_{-4} kg per sq.cm. in the hydraulic system)	200 ± 25 cu.cm.
Pressure for which the safety valve is adjusted	not less than 170_{-4} kg/sq.cm.
Landing gear retraction time at the ambient air temperature of + 20 ± 10°C	not in excess of 45 sec.

Landing gear extension time at the ambient air temperature of + 20 ± 10°C	not in excess of 45 sec.
Bomb-bay door opening time at the ambient air temperature of +20 ± 10°C	not in excess of 2 sec.
Bomb-bay door closing time at the ambient air temperature of + 20 ± 10°C	not in excess of 3 sec.
Number of pumping cycles (pushing and pulling the handle):	
when opening the doors of the bomb bay	not in excess of 120
when extending the landing gear	not in excess of 900

Brake System Specifications

Total capacity of the system tank	40 lit.
Amount of oil filled into the tank with the hydraulic accumulators charged to a pressure of 150 kg per sq.cm. and with the wheels braked during parking	22 lit.
Operating pressure in the oil delivery lines maintained by the pumping station (the output of the pumping station being 8 lit. per min.)	150^{+5}_{-2} kg/sq.cm.
Operation of the pressure switch, type ПДМЗ-150, depending on the change of operating pressure in the system:	
(a) pressure at which the pumping station is cut off	150^{+5}_{-2} and 30^{+5}_{-5} kg/sq.cm.
(b) pressure at which the pumping station is cut in	120^{+5}_{-2} kg/sq.cm.
(c) pressure at which the port warning lamp on the pilots' central instrument panel flashes up	100^{+5}_{-5} kg/sq.cm.
Pressure in the emergency hydraulic accumulator at which the СПШ-130 oil pressure drop warning unit switches on the starboard red warning lamp on the pilots' central instrument panel	lower than 130^{+5}_{-2} kg/sq.cm.
Pressure of commercial nitrogen in the hydraulic accumulator gas chamber (of the main and emergency line) during charging and with no pressure in the hydraulic system	60 ± 3 kg/sq.cm.
Amount of oil in the hydraulic chamber of each hydraulic accumulator (at a pressure of 150 kg/sq.cm. in the hydraulic system)	7180 cu.cm.
Pressure in the wheel expander tubes:	
(a) at normal (main) braking	13 to 14 kg/sq.cm.
(b) at emergency braking	14 to 17 kg/sq.cm.
(c) during parking	11 to 12 kg/sq.cm.
(d) maximum	18 kg/sq.cm.
Time of pressure increase in the wheel expander tubes	not in excess of 1.5 sec.
Time of wheel brake release	not in excess of 1 sec.
Time of landing gear emergency retraction	not in excess of 200 sec.

Time of landing gear emergency extension .... not in excess of 180 s

Time of bomb-bay door emergency closing .... not in excess of 10 s

Note: Check the time necessary for emergency retraction and extension of the landing gear and for closing the bomb-bay doors at the ambient air temperature of + 20 ± 10°C.

Marking of Pipe Lines

For identification purposes each pipe line has the following marking in places of joints: the drawing number, the number of the pipe line according to its purpose and the number of the pipe. The marking is done with black paint on coloured cambric tapes cemented to the pipes. The pipes bearing even numbers are located on the port side of the aircraft, while those bearing odd numbers are located on the starboard side.

Note: On pipes less than 150 mm long the numbers are stamped on a special circular tally which is fitted over the pipe.

Example of pipe marking: H5601-101-10-8, where H5601-101 is the drawing number;

10 is the number of the pipe line (landing gear emergency extension);

8 is the number of the pipe (on the aircraft port side).

Marking of pipe lines is given in Table 10 below.

Table 10

Marking of Hydraulic System Pipe Lines

Nos	Number of line	Purpose of line	Colour of marking
1	2	3	4
		A. Pipe Lines of Landing Gear and Bomb-Bay Door Normal (main) Control Hydraulic System	
1	00	Supply of engine pumps and hand pump	Black
2	0	Reservoir return	
3	1	Drainage	
4	6	Landing gear retraction	
5	7	Landing gear extension	
6	8	Building-up pressure in system	
7	15	Opening of bomb-bay doors	
8	16	Closing of bomb-bay doors	
9	17	Wheel turning to the right	
10	18	Wheel turning to the left	
		B. Pipe Lines of Wheel Brake Normal (main) Control, Landing Gear Emergency Control, Bomb-Bay Door and Wheel Brake Emergency Control Hydraulic System	
11	2	Building-up pressure in normal (main) brake control system	Green
12	4	Brake system reservoir return	Green
13	5	Wheel normal (main) braking (odd numbers - landing gear starboard leg line; even numbers - landing gear port leg line)	
14	3	Building-up pressure in brake emergency control system	Red
15	9	Landing gear emergency retraction	
16	10	Landing gear emergency extension	
17	14	Bomb-bay door emergency closing	

On the aircraft the table of pipe line marking is arranged on the inside of the bomb-bay starboard door.

The material of which the pipe is made can be determined by the colour of the pipe: steel pipes are painted grey, pipes of the AMrl material are covered with primer mixed with aluminum powder.

Charging Main System with Oil

To charge the main system with oil:

1. Jack the aircraft.

2. Open the hatch above the tank (the hatch is located on the aircraft upper skin between frames Nos 31 and 32) and unscrew the plug on the tank filler.

3. Insert a funnel with a gauze into the tank filler, cover the funnel with a clean piece of silk cloth and fill the tank with 28 or 30 lit. of oil.

4. Plug the tank filler and close the hatch over the tank.

5. Connect stand 3783 to the inboard supply panel and build up a pressure of 150 kg/sq.cm. in the system.

6. Retract and extend the landing gear three or five times by operating in turn the slide valves (buttons) of the landing gear main control cock.

7. Place jack P9918-0 under the landing gear nose leg strut, release air (or nitrogen) pressure from its shock absorber, and disengage the centreing device by compressing the shock absorber by 120 or 150 mm.

8. Move the nose wheels from one extreme position to the other not less than four or five times, opening the air vent valve on the eye of the rod which moves down at the given moment. At this the air will pass out of the cylinder lower recess through the open valve.

9. Remove the jack from under the landing gear nose leg strut and charge the shock absorber with commercial nitrogen to a pressure of 15^{+1} kg/sq.cm.

10. Close and open the bomb-bay doors not less than five times.

11. Check the amount of oil in the tank (the tank must contain 20 lit. of oil) and if necessary drain the excessive oil or add the required amount of oil.

Charging Brake System with Oil and Removing Air from It

To charge the brake system with oil:

1. Unscrew the cover of the tank filler.

2. Fill 38 lit. of oil into the tank through a funnel with a gauze (or charge the tank by means of the stand).

[redacted]

3. Screw up the filler cover.

4. Cut in the pumping station and charge both hydraulic accumulators to a pressure of 150^{+5}_{-2} kg/sq.cm.

5. Add some oil to the tank so that the latter contains 26 to 30 lit.

6. Compress in turn the normal (main) brake valves, type УГ-50, on the panels of both pilots' posts.

7. Compress the emergency brake valve, type УГ-39.

8. Add some oil to the tank so that the latter contains 26 to 30 lit.

Note: The line from the wheel tubes to the tank may be filled with oil "from bottom to top" through the air vent valves of the expander tubes.

During the replacement of units and draining of oil from the system air penetrates into it. The presence of air is particularly dangerous in the lines from the brake valves, type УГ-50, to the expander tubes, because this part of the system is of a single-line type.

Air is evacuated from the lines through the air vent valves on the wheel outer brakes first with the УГ-50 valves compressed and then with the УГ-39 valves compressed. Opening of the air vent valves and compression of the brake valve are performed in turn until sprays of oil not containing air appear from the open air vent valves. This done, add some oil to the tank so that the latter contains 22 lit.

Air can be evacuated from the lines by pumping the system from bottom to top as well. For this:

1. Remove the caps from the outer brake air vent valves of the port leg front pair of wheels.

2. Connect the hoses of stand No.1530 to the pipe unions of the open air vent valves and pump 3 or 4 lit. of oil from the tank of the stand to the aircraft tank.

Note: When pumping over oil, check the level of oil in the tank; see that it does not exceed the rated value. Each time drain the excessive amount of oil through the drain pipe into some reservoir.

3. Close the air vent valves of the outer brakes on the port leg front pair of wheels and open the similar valves on the rear pair of wheels of the same leg.

4. Connect the hoses of stand No. 1530 to the open air vent valves and pump 3 or 4 lit. of oil to the aircraft tank.

5. Close the air vent valves of the outer brakes on the port leg rear pair of wheels.

6. Repeat Operations 1, 2, 3, 4, and 5 in relation to the starboard leg wheels.

After air has been evacuated from the system, check the level of oil in the tank and the operation of the brakes. F r this purpose:

1. Switch on the pumping station and charge both hydraulic accumulators to a pressure of 150^{+5}_{-2} kg/sq.cm.

2. By means of adaptors H9941-310 screw the reference pressure gauges into the valves located on the collapsible pipe line of both landing gear legs.

3. Compress the normal (main) brake valves and set them to the parking brake position. Pressure in the expander tubes must be equal to 11 or 12 kg/sq.cm., while the amount of oil in the tank should be 22 lit. If necessary, add oil to the tank or drain excessive amount of oil.

4. Release the parking brake.

5. Press the pedals as far as they will go; at this, pressure in the wheel expander tubes must be equal to 13 or 14 kg/sq.cm.

6. Compress the emergency brake valves, type УГ-39; pressure in the wheel expander tubes must reach 14 to 17 kg/sq.cm.

Note: Pressure difference in the wheel expander tubes on the port and starboard legs must not exceed 1 kg/sq.cm.

If the results obtained during the check do not comply with the Specifications of the system repeat the procedure to evacuate air from the system.

Access Hatches for Inspection of System Separate Units

Most of the hydraulic system units are located in places easily accessible for maintenance and inspection.

The arrangement of units and hatches ensuring access to them (Fig.101) is given in Table 11 below.

Table 11

Unit	Access Hatch
1. Brake valves, type УГ-50, main and brake hydraulic system pressure gauges, type МГ-250Ц, needle-type throttle valves upstream of pressure gauges Pilots' central panel with units belonging to it: landing gear normal (main) and emergency controls, landing gear nose leg turning control, emergency brake valve, type УГ-39, emergency brake system switch Hand pump, type НР-01, and throttle valve at frame No.11	Access and inspection directly from cabin of fuselage compartment Ф-2. Central panel is provided with special hatch for inspection of units belonging to it
2. Brake system tank, drainage system tank, solenoid-operated slide valve, type ГА-49, hydraulic switches, type УГ-34, brake system hydraulic accumulators, hydraulic system units panel, type Н5606-0, with following units belonging to it: pumping station (465Х), brake system line filter, pressure switch, type ПДМЗ-150, pressure warning unit, type СПИ-130, hydraulic accumulator of main hydraulic system, safety valve, brake system pressure release valve, and non-return valve	Access and inspection with cover of pressurised hatch in bottom of frame No.12 removed. Units panel, type Н5606-0, is provided with easily opening cover
3. Main hydraulic system tank, cooler	Access and inspection with cover of mounting hatch 2 over centre plane removed

[redacted]

50X1-HUM

Unit	Access Hatch
4. Main hydraulic system panel, type H5606-100, with following units belonging to it: line filter, pressure regulator, bomb-bay door controls, cut-off cock, non-return valve, and ground supply pipe union	Access and inspection bomb-bay doors open. Pan H5606-100 is located on starboard side at frame and is provided with ea opening cover.
5. Pumps (units 435-E3), by-pass flow restrictors, non-return valves in delivery line running from pumps	Access and inspection engine cowl upper shutter open
6. Pressure reducers, type JT-53, with shuttle valves; landing gear main leg hydraulic actuating cylinders with slide valve distributors mounted on them; locks fixing landing gear in retracted position, and double-action valves	Access and inspection landing gear fairing Com open
7. Dampers and throttle valve of landing gear nose leg turning control system	Open access; units are mounted on landing gear leg
8. Landing gear nose leg hydraulic actuating cylinder, locks fixing leg in retracted and extended positions, drain valve, pressure regulator at frame No.19.	Access and inspection nose leg well. To exami pressure regulator, rem well casing

Note: The hydraulic system pipe lines and flexible hoses are chiefly op ed for inspection. In closed-up places they are inspected through hatches and removable panels.

Checking Landing Gear Actuating Mechanism

To check the landing gear actuating mechanism, lift the aircraft by t hydraulic actuating cylinders so that the distance between the wheels and t surface of the parking ground is 100 to 150 mm.

Connect a special stand provided with a pump having an output of not le than 50 lit. per minute to the main hydraulic system units panel. Prior to connecting the hoses of the stand thoroughly clean their terminations. Cut i the stand pumps and build up pressure in the main hydraulic system.

Landing Gear Retraction

Bring oil pressure in the main hydraulic system to 146 - 157 kg/sq.cm. as indicated by the pressure gauge and make sure that the handwheel controll the turning of the landing gear nose leg wheels is in the neutral position and that its push button is depressed and locked. This done, open the contr cap, press the RETRACTION button as far as it will go and turn it home clock then release the button; at this the button must remain depressed.

Note: On pressing the RETRACTION button all the three green warning la of the landing gear extended position must go out, oil pressure in the system must first drop to 70 - 100 kg/sq.cm. and then increase with the landing gear retraction. At the moment all th three red warning lamps of the landing gear retracted position fl up oil pressure in the system must be 120 kg/sq.cm. and then sh increase to 146 - 157 kg/sq.cm. (maximum pressure built up by th stand).

Keep the system under this pressure during 5 sec. after the last red warning lamp has flashed up, turn the RETRACTION button home counter-clockwise and release it. The button must return to the neutral (upper) position.

Note: With the landing gear retracted, the tail skid position green lamps must be on.

Landing Gear Extension

Make sure that oil pressure in the main hydraulic system is equal to 146 - 157 kg/sq.cm. as indicated by the pressure gauge and that the RETRACTION button is in the neutral (upper) position.

Smoothly press the smaller EXTENSION button without moving the larger button and keep it pressed for 2 or 3 sec. Then, still pressing the smaller button, press the larger button as far as it will go, turn it home clockwise and release both buttons. At this the smaller button must return to the neutral (initial) position, while the larger button must remain depressed. Make sure that the smaller button has returned to the initial position.

When the larger button is locked and the smaller button has returned to the initial position the landing gear retracted red warning lamps must go out; pressure in the system must first drop to 70 to 100 kg/sq.cm. and then increase. After all the three landing gear extended green warning lamps flash up, pressure in the system must sharply rise to 146 - 157 kg/sq.cm.

Keep the system under this pressure for 10 sec. after the last green warning lamp has flashed up and turn the landing gear extension larger button counter-clockwise as far as it will go. The button must return to the neutral (upper) position.

CAUTION: When performing this operation as well as in other cases take care not to press the smaller EXTENSION button. This may cause unlocking of the nose leg strut and retraction of the leg. Therefore, after all the operations have been performed, close the control cap, lock it with wire and place a stop under the smaller EXTENSION button.

Landing Gear Emergency Retraction and Extension

The landing gear retraction and extension from the emergency system is effected in the same way as from the main hydraulic system. Prior to pressing the emergency control buttons make sure that the landing gear normal control buttons are in the neutral (upper) position.

Checking Landing Gear Mechanism

During the retraction and extension of the landing gear check the following:

1. Time of landing gear retraction from the main and brake systems.
2. Time of landing gear extension from the main and brake systems.
3. Maximum pressure during landing gear retraction which must not exceed 130 kg/sq.cm. from the main system and 150 kg/sq.cm. from the brake system.
4. Maximum pressure during landing gear extension which must not exceed 130 kg/sq.cm. from the main system, 110 kg/sq.cm. from the emergency system, and 60 kg/sq.cm. from the hand pump.
5. Operation of the ball locks of the main leg actuating cylinders. The locks must operate promptly both during the normal (main) and emergency extension and retraction of the legs.

[redacted]

50X1-HUM

To check the actuating cylinder for proper locking by the ball lock, its head is provided with a special hole closed with a plug.

If the actuating cylinder is locked, the lock case projecting by 3 mm will be seen in the hole (after the plug has been removed from it); if the actuati cylinder is not locked, the lock case does not project (the hole is completely open).

6. Operation of the landing gear light signal system.

7. Number of cycles - pumpings during landing gear extension from the han pump. The number of cycles must not exceed 900.

CAUTION: The landing gear retraction and extension must be performed at th command of the person supervising the work. This person must be outsi the aircraft and must observe the preparation of the aircraft and th work of the personnel. The ground supply stand should be cut in and off at his order.

Checking Landing Gear Nose Leg Wheel Turning Mechanism

To check the landing gear nose leg wheel turning mechanism, the aircraft should be jacked.

It is necessary to place jack P9918-0 under the head of the nose leg rod and then release air pressure from the shock absorber and disengage its centri device by compressing the shock absorber by means of the jack by 120 or 150 m.

Note: To compress the shock absorber screw clamps may be used.

Prior to connecting the ground supply stand make sure that its hoses are clean; build up a pressure of 146 to 157 kg/sq.cm. in the main hydraulic syste

To put the wheel control into action, move away the safety "tab" locking the panel button and then move the button upward. After this the system is rea for operation.

The angle of wheel turn is proportional to that of the handwheel turn. The wheels must turn smoothly (without jerks). When the handwheel is not bein turned, the wheels must not move spontaneously and the handwheel must be secur ly locked in any position. The handwheel should not move under the action of the pressures exerted by the non-response system. The time required for the wheels to turn from one extreme position to the other must not exceed 5 sec. The central neutral position of the control panel handwheel should correspond to the wheel position along the aircraft longitudinal axis with the deflectio angle accurate within 15'. The control handwheel play must not exceed 15'.

The amount of torque for rotation of the valve handwheel during the turni of the wheels must not exceed 60 kg-cm; the handwheel must move smoothly.

On pressing the button the wheel servo control must be cut off in no more than 0.5 sec. The tension of the follow-up system cables must be equal to 30 ± 5 kg; the difference in cable tension in the static condition and during the movement of the system must not exceed 8 kg.

The check over, depress the valve button and lock it with the "tab".

CAUTION: When checking the wheel control take care to see that the additional damper is not overheated, as this might bring about its failure.

Checking Bomb-Bay Door Actuating Mechanism

When checking the bomb-bay door actuating mechanism, the main hydraulic system may be fed by:

(a) a special stand connected to the units panel located at frame No.34 (the hoses from the stand should be let through the hatch in the starboard door);

(b) the hand pump, type HP-01;

(c) pumps (units 435-B9) with the engines operating.

Prior to checking the mechanism switch on the control and signal system circuit breakers.

The tactical control of the bomb-bay doors is performed from one or two tumblers mounted on the starboard panel of the navigator-bombardier, while the door emergency opening is performed simultaneously with bomb release from a separate tumbler mounted on the port panel of the navigator-bombardier or from the tumbler mounted on the left pilot's instrument board.

With the system de-energized, the doors are opened from the storage batteries by means of the tumbler mounted on the left pilot's side panel.

The auxiliary closing of the doors can be performed from the brake system by means of the tumbler mounted on the pilots' central panel. The doors having been closed, do not switch off the tumbler earlier than in 6 sec.

During the opening and closing of the doors check the following:

(a) operation of the ball lock fixing the doors in the closed position;

(b) the time required for opening and closing the doors from the main system (not more than 2 sec. for opening and not more than 3 sec. for closing), from the emergency system (not more than 3 sec. for opening), and from the auxiliary system (not more than 10 sec. for closing).

When closing the doors from the hand pump the required number of cycles (pumpings) must not exceed 120;

(c) correct operation of the slide valve distributor;

(d) operation of the light signal system.

Checking Brake System and Brake Adjustment

The operation of the brake system should be checked during the emergency retraction and extension of the landing gear, during the bomb-bay door closing from the auxiliary control, and during the normal and emergency wheel braking.

The time required for charging two hydraulic accumulators of the brake system to a pressure of 150 kg/sq.cm. must not exceed 140 sec.

During the charging of the hydraulic accumulators check the characteristic operating duties of pumping station 465K indicated in the Specifications and determined by the adjustment of the ПДБ-150 oil pressure switch, as well as pressure (130^{+5}_{-2} kg/sq.cm.) at which the emergency hydraulic accumulator pressure drop warning lamp goes out. The current consumed by pumping station 465K must not exceed 180 A.

Note: Pumping station 465K must not operate continuously on the ground under normal operating conditions for more than one hour; after this the pumping station must be completely cooled prior to the next starting.

The main and emergency hydraulic accumulators, when charged to capacity, should ensure 10 braking cycles each.

The amount of air pressure in the hydraulic accumulator gas chamber during charging is determined by sending a short electric pulse from the pumping station forced switching tumbler.

The hydraulic system must be previously discharged to zero.

[redacted]

Air pressure in the hydraulic accumulator gas chamber should be checked first with the emergency hydraulic accumulator switched off and then with th accumulator switched on.

The indications of the MAIN BRAKING (ОСНОВНОЕ ТОРМОЖЕНИЕ) and EMERGEN BRAKING (АВАР. ТОРМОЖЕНИЕ) pressure gauges at which a smooth pressure increase begins will correspond to the pressure in the hydraulic accumulat gas chambers. To accurately measure pressure during charging of the hydrauli accumulator use a pressure gauge screwed into the charging valve.

With the brake system in good repair, pressure drop from 150^{+2}_{-2} to 120^{+5}_{-2} kg/sq.cm. during not less than 45 min. is permitted.

<u>Note</u>: During charging of the hydraulic accumulator from zero to 150 kg/sq.cm. pressure in it will drop more rapidly as a result of cooling of nitrogen which is warmed up on compression. Therefore, measure the time after 5 or 6 operations of the ПДМ3-150 oil pressure switch.

To check the brake adjustment, connect four pressure gauges (instruments H9941-310) to the brake line after the pressure reducers. The line is provid with special valves for connecting the pressure gauges. When pressing the ped pressure in the wheel expander tubes should be proportional to the pressure applied to the pedals. Pressure in the expander tubes should increase within 1/6 to 1/4 of the pedals full travel and reach 13 or 14 kg/sq.cm. when they a pressed as far as they will go.

With each pedal pressed as far as it may go, the force applied to it must not exceed 85 kg.

<u>Note</u>: The moment of the beginning of the valve braking action is adjust by screwing in the thrust screw on the pedal lever. During braking the pressure difference as indicated by the pressure gauges of th port and starboard struts must not exceed 1 kg/sq.cm. with the pedals fully pressed.

If effort applied to the pedals is relieved smoothly, pressure in the expander tubes should decrease gradually, and at the moment the pedals are 1/ or 1/4 short of the stop the pressure should drop tp zero.

The parking brake in action must ensure a pressure of 11 to 12 kg/sq.cm in the expander tubes.

The interaction of the brake pedals of both pilots must meet the follow requirements:

- if the right pilot presses his pedals without intending to brake and creates a pressure of up to 5 kg/sq.cm. in the wheel expander tubes, this must not prevent the left pilot from fully pressing his pedals and creating an operating pressure of up to 13 - 18 kg/sq.cm. in the expander tubes;
- if, with the right pedals pressed, a pressure of up to 5 kg/sq.cm. is built up in the expander tubes and the left pilot sharply releases his pedals from the fully compressed position, pressure in the expander tubes must drop to 5 kg/sq.cm.

Wheel braking must begin at a pressure of not over 1.5 kg/sq.cm. in the expander tubes; release must take place not later than in one second after the pressure applied to the brakes has been relieved.

To check the wheel automatic braking, disconnect the inertia transmitter (anti-skid detectors), type УА-24. from the wheels without breaking the electric circuit, and by closing the circuit with sharp movements of the transmitter shaft check by the pressure gauges pressure drop in the expander tube from each transmitter in turn.

At this, the pressure relief slide valve, type ГА-49, must operate prompt and reliably ensuring pressure drop in one second at the most.

After the brake automatic device has operated pressure in the expander tubes must increase during 1.5 sec. at least. This time depends on the diameter of the hole in the flow restrictor mounted in the pipe line upstream of the brake valves, type УТ-50. The lamp on the pilots' central instrument board must flash up at each closing of the УА-24 transmitter circuit.

<u>Note</u>: The ГА-49 valve must not be energised for more than two minutes.

When a pressure over 8 kg/sq.cm. is built up in the brake valve line, the hydraulic switches, type УТ-34, must close the circuit of the ГА-49 valve; at a pressure less than 4 kg/sq.cm. they should open the circuit. On disconnecting the automatic brake tumbler located on the pilots' central panel the brake automatic device must stop operating.

During emergency braking check to see that:

(a) the brake system is isolated from the main system with the shut-off valve closed;

(b) the shuttle valve on the pressure reducers can be switched over reliably;

(c) during the first braking, with the handles pressed as far as they will go and the charging valve closed, pressure in the wheel expander tubes amounts to 14 - 17 kg/sq.cm.;

<u>Note</u>: Prior to braking pressure in the system must be equal to 150^{+5}_{-2} kg/sq.cm.

(d) after the release of the handles the time required for wheel release does not exceed 1.5 sec.;

(e) the effort required to turn the "tab" of the emergency hydraulic accumulator charging shut-off cock does not exceed 10 kg.

3. SPECIAL INSTRUCTIONS

When carrying out preflight and postflight inspections of the landing gear and hydraulic systems, follow the "Inspection Guide No. 2H, Part I" and the below instructions:

1. When examining the collapsible strut of the landing gear nose leg, check the following:
   - locking of hinged connections;
   - strut lock. When the lock is closed, there should be no clearance between the stops of the front link and the strut flat truss. The strut must be deflected by 8 or 10 mm, while the lock side links (See Fig.83) must be in such a position that their axes of symmetry are above the axis of rotation of the crank by 0.5 to 1 mm.
2. When examining the pipe lines located in the fuselage compartments between frames No.5, 9, 13, 15, and 34, check to see that the pipes are clear of one another and of the metal parts of the aircraft. The clearance between separate pipes in a bunch must be not less than 2 mm; in separate places it is permitted to reduce this clearance to 1.5 mm at straight sections and to 1 mm at bent sections. In places of bending where it is impossible to maintain the required clearance, cover the pipes with two or three layers of insulating tape for a length of 40 mm.

[redacted]

4. FAULTS AND REMEDIES

Nos	Fault	Cause	Remedy
1	2	3	4
		MAIN HYDRAULIC SYSTEM	
1	Time required for landing gear retraction exceeds the normal value, time required for landing gear extension being normal	The valve of the flow restrictor located at frame No.11 is jammed	Replace the flow restrictor
2	Time required for landing gear extension exceeds the normal value, time required for landing gear retraction being normal	The choke of the flow restrictor located at frame No.11 is clogged	Replace the flow restrictor
3	Time required for landing gear extension and retraction exceeds the normal values	(a) The slide valve distributor of the nose leg or one of the main legs is leaky. Oil flows from the main system tank into the brake system tank (b) The pump output is insufficient (units 435-B9)	(a) Replace the defective sli valv distributo (b) Replace the pu
4	Spontaneous turning of the nose leg and the control handwheel after pressure has been relieved	The resistance of the brake spring of the nose leg control handwheel is insufficient	Unscrew the attachment nut and remove th control handwheel. Extend the brake spring and place und it a washer not more than 4 mm thick. Assemble the panel an check the landing gea nose leg turning cont system
5	On the aircraft raised by hydraulic jacks the landing gear nose leg does not stop and continues to turn spontaneously when the control handwheel is stopped	The flow restrictor of the additional damper is clogged, which is determined by the effort required to move the damper rod disconnected from the leg	Replace the additi damper
6	Spontaneous switching off nose leg control system	The rod of the control panel button is improperly locked. The efforts required for depressing and pulling out the button do not correspond to the rated value (the effort should not exceed 9 kg for depressing the button and 5 kg for pulling out the button)	Tighten up the adjusting screw of the stop so as to obtain the normal efforts required for depressing and pulling out the button
7	Oil pressure in the main system built up by the pumps (units 435-B9) is higher or lower than normal pressure	Incorrect adjustment of the pumps (units 435-B9)	Adjust the pumps and check pressure in the main system with the engines running
8	Pointer of the pressure gauge measuring pressure in the main system flickers	(a) Air pocket in the line feeding oil to the pressure gauge (b) Pressures built up by separate pumps (units 435-B9) are unequal (c) The resistance of the flow restrictor in the line feeding oil to the pressure gauge and located in front of the left pilot's instrument board is insufficient	(a) Drain a small amount of oil from the line (b) Adjust the pumps to equalise pressure (c) Screw up the flow restrictor pin to stop the pointer flicker
9	The bomb-bay doors fail to get opened from the emergency system	(a) The supply circuit of the SMC-1 door emergency opening switch is de-energized or the switches are faulty (b) With the SMC-12 electromagnet de-energised, the door main control lets oil pass into the door closing line. To check for this fault, disconnect the hose supplying oil to the door closing line from the hydraulic actuating cylinder and build up pressure in the system. The appearance of oil through the hose open end testifies to a faulty control	(a) Check the circuit and the SMC-1 switch (b) Replace the door main control

[redacted]

50X1-HUM

1	2	3	4
10	The bomb-bay doors fail to get opened both from the main and brake systems	With the electromagnet de-energized, the door auxiliary closing control (of the brake system) lets oil pass into the door closing line	Open the doors releasing pressu from the brake sy- tem. Replace the door auxiliary closing control
11	The bomb-bay doors fail to remain in the closed position after closing	(a) The ЭПК-1 door auxiliary or emergency opening switch is energized at all times (b) The spring is weak and the ball lock of the door actuating mechanism fails to get locked (c) The stop of the door emergency opening mechanism is worn out (d) The doors are too tight Note: With the actuating cylinder in good repair and the emergency mechanism cocked, the ball lock should get locked at a pressure of 70 to 80 kg/sq.cm. built up by the hand pump and should open from the normal control at a pressure of 25 to 30 kg/sq.cm.	(a) Check the unit (b) Replace the actuating mechanis (c) Replace the stop (d) Reduce the tightness

BRAKE HYDRAULIC SYSTEM

1	2	3	4
1	Pumping station 465K gets switched off and on at pressures which do not meet the Specifications	The pressure switch, type ПДШ3-150, is misadjusted	Replace the pre sure switch, type ПДШ3-150
2	The telltale lamp of the brake system emergency control flashes at pressure lower than 128 kg/sq.cm. or higher than 135 kg/sq.cm.	The pressure drop warning unit, type СШ-130, is misadjusted	Replace the pre sure drop warnin unit, type СШ-13
3	Pumping station 465K fails to get switched off. Pressure in the system is less than 150 kg/sq.cm.	The safety valve of panel Н5606-0 is misadjusted. The valve opens at pressure less than 160 kg/sq.cm.	Replace the valv

1	2	3	4
4	The efforts required for pressing and releasing the parking brake exceed the rated value	The parking brake mechanism is misadjusted	Adjust the parking brake mechanism
5	The system hydraulic accumulator fails to ensure 10 cycles of wheel braking	(a) Wear of the brake shoes exceeds the permissible value (4 mm) (b) The hydraulic accumulator is insufficiently charged with air. To check the degree of charging the hydraulic accumulator with air, release pressure in the system to zero and effect a short pressure pulse by actuating the tumbler switching on pumping station 465K. Pressure built up in this way will correspond to the degree of charging the hydraulic accumulator with air (c) Presence of air in the system	(a) Replace the brake shoes (b) Charge the hydraulic accumulator with air to 60 ± 3 kg/sq.cm. (c) Evacuate air from the system
6	On pressing the pedals the wheels fail to get braked	The circuit of the brake automatic unit is shorted (the brake automatic unit warning lamp on the pilots' central instrument board is on)	Check the electric circuit
7	The brake automatic unit has failed (the wheel tyres may get damaged)	(a) The wiring is faulty (b) The УГ-34 switch has failed (c) The УА-24 transmitters have failed	(a) Check the wiring (b) Replace the УГ-34 switch (c) Replace the УА-24 transmitters
8	Time required for emergency retraction and extension of the landing gear exceeds the rated value	(a) Voltage in the aircraft mains is insufficient (b) The output of pumping station 465K has decreased due to a damage to the contact of the minus jumper and that of the "to frame" connection	(a) Increase voltage in the aircraft mains (b) Check the wiring

[redacted]

50X1-HUM

1	2	3	4
		(c) The flow restrictor or choke is clogged (d) The output of pumping station 465K is insufficient	(c) Replace the flow restrictor (d) Replace the pumping station
9	The effort required for turning the emergency system charging shut-off cock exceeds the rated value	The effort exceeds 10 kg as measured by the dynamometer	Replace the cock
10	Pressure in the drain tank fails to drop	The valve releasing pressure in the tank is jammed	Eliminate jamming or replace the valve
11	Rapid pressure drop in the system	Oil passes into the return line through: (a) the brake valve, type JT-92 (b) the relief valve of panel H5606-0 (c) the solenoid-operated valve of the bomb-bay door emergency control Most often this fault may be detected by listening. If it is impossible to detect the fault in this way, disconnect the return line Leakage in the return line with the unit in the neutral position indicates that the unit in question is faulty	Replace the defective units
12	On pressing the pedals, the wheels are braked with great delay	Air pocket in the brake line	Evacuate air from the system by pumping oil through the wheel expander tubes into the tank

---

Chapter VI

POWER PLANTS CARE AND MAINTENANCE

1. SPECIAL DIRECTIONS

The preflight and postflight inspections of the power plants are performed in accordance with Inspection Guide No.2H, Part I, and the following additional directions:

1. The amount of main fuel delivered to the aircraft tanks during refuelling is checked (with the aircraft mains de-energized) by using refuelling floats (Fig.102), contained in the equipment set furnished with every aircraft.

2. When inspecting the engine air intake duct, check the duct-to-compressor housing sealing (Fig.103).

3. When inspecting the brackets and the attachment fittings of the cowls and covers, make certain that the frame and the skin are free of any defects. Check to see that the nuts holding the cowl frame, and the cover attachment fitting nuts are securely locked.

4. Check the attachment of the engine mount brace strut to the engine and to fuselage load-carrying frames Nos 43 and 46. All locking nuts on the engine mount brace struts should be securely tightened and locked by locking washers.

Tightening of the locking nuts on the engine mount brace struts should not be resorted to unless absolutely necessary, as their repeated locking may lead to breakage of the locking washer tabs, which will call for disassembly of the brace strut adjustable units and for engine levelling.

When checking the units, see that no load is imposed on engine mount brace strut No.7, which testifies to the fact that the engine has been levelled properly.

<u>Note:</u> With the engine at standstill, brace struts Nos 4, 5, and 6 may be slightly rocked by both hands.

5. Check the position of the pipe lines in the bulkhead openings. The distance between the pipe line and the edges of the hole should not be less than 1.5 mm per side; the pipe line should be rigidly secured.

<u>Note:</u> The clearance between the pipe lines and the fixed components of the engine nacelle frame should not be less than 5 mm, whereas clearances between the pipe line and the moving components of the control links must not be less than 10 mm. A clearance of 3 to 6 mm is allowed at a distance of not over 150 mm from the pipe line attachment. In some places rubber hoses are allowed to contact flat or rounded (to not less than 4-mm radius) smooth frame components.

[redacted]

50X1-HUM

6. Check the electric circuits controlling the isolating valves and warning button lamps of the fire-fighting system, proceeding as follows:

(a) switch on signal circuit breaker АЗС-5 mounted on the right-hand panel. Circuit breaker АЗС-10 – CO_2 BOTTLE CONTROL (УПРАВЛЕНИЕ БАЛЛОНАМИ CO_2) located on the same panel should be switched off;

(b) cut in the switch mounted on the fuel supply control board and carrying the inscription FIRE-FIGHTING SYSTEM (ПРОТИВОПОЖ. СИСТЕМА);

(c) press successively all the button lamps located on the fuel supply control board FIRE WARNING PANEL (СИГНАЛИЗАЦИЯ ПОЖАРА НА САМОЛЕТЕ).

If the electric circuit is serviceable, the button lamps should light up;

(d) cut out and then cut in the FIRE-FIGHTING SYSTEM switch. The button lamps must remain dead.

The fire-fighting system will be ready for operation as soon as circuit breaker АЗС-10 (CO_2 BOTTLE CONTROL) mounted on the right-hand panel is switched on.

Note: When the engine compartment button lamps are pressed, the engine blow-off band closes the ports; the engine control lever set against the CUT-OFF (СТОП) stop causes the shutter in the branch pipe supplying air to the cowl to close. Closing of the ports is accompanied by a click, whereas closing of the shutter may be observed by the action of the control cylinder located on the branch pipe.

7. Check fuel gauge system СЭТС-60И, proceeding as follows:

(a) switch on the following circuit breakers mounted on the right-hand panel: АЗС-2 with the inscription FUEL CONSUMPTION CONTROL (УПРАВЛЕНИЕ РАСХОДОМ ТОПЛИВА); АЗС-5 with the inscription AUTOMATIC FUEL CONSUMPTION (АВТОМАТ. РАС-ХОД ТОПЛИВА); АЗС-2 with the inscription CONTROL OF SERVICE PUMPS OF TANKS NOS 6 AND 16 (УПРАВ. ДЕЖУРН. ПОМПАМИ БАКОВ No.6 и 16); АЗС-2 with the inscription MEASURING FUEL IN TANK GROUP (ИЗМЕРЕН. ТОПЛИВА ГРУППЫ); and АЗС-2 with the inscription FUEL PUMP AND SHUT-OFF COCK SIGNALLING SYSTEM (СИГНАЛИЗ. ТОПЛИВ. ПОМП И ПОЖАР. КРАНОВ);

(b) switch on inverter ПО-4500 and check voltage in the A.C. mains, which should amount to 115 ± 1 V;

(c) switch on both circuit breakers LEFT, RIGHT (ЛЕВ., ПРАВ.) arranged on the fuel supply control board, under the inscription SWITCHING FUEL CONSUMPTION CONTROL UNIT (ВКЛЮЧЕНИЕ АВТОМАТА РАСХОДА ТОПЛИВА), and set the circuit breaker located under the inscription CONTROL (УПРАВЛЕНИЕ) in the AUTOMATIC (АВТОМАТ) position;

(d) switch on both circuit breakers АЗС-5 (LEFT, RIGHT) FUEL GAUGE SUPPLY (ПИТАНИЕ ТОПЛИВОМЕРОВ) located on the right pilot instrument board, and push the buttons on the fuel gauge indicators to shift their pointers to the zero position. Then, by shifting the knobs of each fuel gauge switch ПГ-7 onto the terminals TOTAL, 1 GROUP, 2 GROUP, 3 GROUP, 4 GROUP, and 5 GROUP (СУММА, 1гр., 2гр., 3гр., 4гр., 5гр.) read the amount of fuel in each of the tank groups off the indicator inner scale, and the total amount of fuel per engine off the outer scale. Then, check the results obtained against the readings of the refuelling truck fuel gauges;

(e) check both (right and left) amplifiers УА-68, operating in parallel, by de-energising them in turn. Continuous burning of the pilot lamps on the fuel supply control board will indicate that the amplifier energized at the time is sound;

(f) check to see that automatically controlled booster pumps ЭЦН ...ly started during aircraft refuelling. With the engine at standstill, operation of the pumps is checked aurally as well as by the indications of the green pilot lamps mounted on the fuel supply control board; with the engine running, pump operation may be checked by the indications of the green lamps only;

(g) check fuel consumption manual control by setting the circuit breaker, mounted on the fuel supply control board under the inscription CONTROL, in the MANUAL (РУЧНОЕ) position. If circuit breakers АЗС-5 for manual control of the I front, I rear, II, III, and IV tank groups are kept in the OFF (ВЫКЛЮЧЕНО) position, the pilot lamps will go out. Then by cutting in circuit breakers АЗС-5 of the I front, I rear, II, III, and IV tank groups in succession, check the operation of the respective pumps aurally as well as by the indication of the green pilot lamps;

(h) having checked the measuring section of the fuel gauge system and determined the precise amount of fuel contained in the aircraft tanks (both total amount and amount contained in each of the tank groups), set the pointers of fuel meters РТС-16 against the divisions corresponding to the total indications of the fuel gauges (for each of the power plants).

8. Check the fuel shut-off cocks for tightness and proper operation; check the respective signalling devices.

The tightness of the fuel shut-off cocks is checked by means of electric pressure gauge ЭДМУ-3, which measures fuel pressure upstream of pumps ПН28-15. With the booster pumps inoperative, the pressure gauge pointer should read zero; with the pumps running and the fuel shut-off cocks closed, the pressure gauge readings should remain the same.

9. To prepare the engine for starting:

(a) fit chocks under the landing gear wheels;

(b) thoroughly clean the ground in front of the aircraft of foreign objects, dirt, and dust; in summer time the ground should be watered;

(c) drain fuel sediment (1.5 to 2 lit.) through the drain cocks of the groups of tanks filled with fuel. Having drained the sediment, close the cocks and lock them. Drain the sediment prior to each flight;

(d) connect the aircraft mains to the power supply source, and check voltage which should be within 27.5 ± 2.7 V;

(e) check air pressure in the aircraft air system, which should not be less than 80 kg/sq.cm.;

(f) open the ports by actuating the engine air blow-off band and close the cowl covers.

To open the ports by the air blow-off band, turn on circuit breaker АЗС-5 AIR SUPPLY COCK (ВОЗДУШН. КРАН) located on the left pilot circuit breaker panel, press the button on the engine, and turn off the wing nut on the stud, simultaneously checking the operation of the cowl shutters mechanism;

Notes: 1. The air blow-off band should open the ports only after all operations have been performed and inspection completed to prevent foreign objects from finding their way into the engine compressor.

2. Engine starting after completion of scheduled maintenance or mounting work should be done with the cowl covers open to allow inspection of the pipe lines and individual assemblies on the running engine, as well as to check engine adjustment.

(g) check the engine control system by shifting the respective control levers

[redacted]

50X1-HUM

from the CUT-OFF stop to the maximum speed stop and backwards. If the control system has been properly adjusted, the levers will move smoothly (without jamming or jerks); no play is allowed in the control system. With the engine control lever set against the idle rating stop, the indicator of the ПН-28 pump lever should b between the extreme notches of the idle rating sector.

When the engine control lever is set in the CUT-OFF or TAKE-OFF (ВЗЛЕТ) position, the pump lever should closely contact the respective stops, whereas the engine control lever should be capable of travelling additionally by at least 5 m

The positions of the CUT-OFF and TAKE-OFF stops are checked prior to each flight, the CUT-OFF stops being checked both on the running and inoperative engines, while the TAKE-OFF stops - on the inoperative engines only. The positions of the engine control lever are checked for proper agreement with the positions of the ПН-28 fuel pump lever indicator on the CUT-OFF stop in the following cases: when the idle rating r.p.m. has changed; when the engine is not motoring over at starting, or smokes after it is stopped; a change in the engine maximum rating r.p.m. also calls for the above check;

(h) check the turbo-starter exhaust pipe shutters for proper operation, proceeding as follows:

- switch on circuit breaker АЗС-25 and two circuit breakers АЗС-15 mounted on the circuit breaker panel of the left pilot and incorporated in the engine starting system;
- turn on the master switches (2ПП-45) mounted on the engine starting panel; make sure the pilot lamps light up and the exhaust pipe shutters are fully open;

CAUTION: Do not start the engine, unless the turbo-starter exhaust pipe shutters are fully open.

- turn off the master switches thereby causing the shutters to close and the pilot lamps to go out;

(i) check pressure in the brake hydraulic system by the readings of pressure gauge МТ-250П.

Apply the parking brakes.

10. When starting the engines, check the changes taking place in the turbo-starter and engine characteristics.

11. Inspect the engine nacelles on the outside and inside for damage on the frame components or skin; check to see that the inspection hatches and the cowl covers are closely fitted and securely locked; make certain no foreign objects are left in the nacelles; see that there are no fuel or oil runs on the cowl covers or on the engine housing.

In case traces of fuel or oil are detected, or some foreign objects are found in the nacelle, the engine, its units and pipe lines must be subjected to a more thorough inspection; check the air blow-off band and its control mechanism units for damage; make sure the inspection doors of the three external covers of the nacelle are intact.

12. Inspect the engine attachment fittings, making sure there are no cracks or corrosion on the engine mount rods and assemblies; check to see there are no loose bolts or defective joints. When carrying out the inspection, bear in mind that brace strut No.7 should freely turn in the hinges, and that peening may develop on the rods under loose bolt heads and nuts.

13. When replacing the engine control system cables, or tightening them up, refer to the respective data presented in Fig.104.

14. When inspecting the hoses and pipe lines running inside the engine

nacelles, check the high-pressure line hoses (especially those of the [illegible]) for proper condition.

In case "sweating" or minor damage is detected on the high-pressure line hoses check whether they are fit for further service at high pressure, with the engine running.

Leaky joints in the pipe lines should be eliminated by replacing the sealing rings. After replacing the sealing rings, tighten the union nuts by turning them through 60±10°, in case the pipe diameter amounts to 24 mm, or through 40±10°, with the pipe diameter exceeding 24 mm.

Start tightening up the nut after it comes against the bearing surface of the pipes to be connected.

15. Should it become necessary to start the engine with the cowl open, the air blow-off band should open the ports just before starting.

Never start the engine with the ports closed by the air blow-off band.

16. The engine oil system tanks hold 35 lit. of oil each. The amount of oil in the tank is measured with the aid of a dip stick connected to the filler cap.

CAUTION: When fitting the filler cap complete with the dip stick in position, take care to avoid misalignment or displacement of the cap so as not to affect its tightness. With the engine running, oil will spurt out of the tank filler, if the cap is not tight.

After filling the tanks with oil:

(a) deliver oil to the pipe line upstream of the engine pump through the drain cock (the cock clear opening being 10 mm) located on the supply line till the oil stream does not contain any air bubbles;

(b) crank the engine to fill the system with oil and to eliminate air locks, as well as to check oil pressure in the system by means of electric pressure gauge ЭМИ-3Р (oil pressure should not be less than 0.5 kg/sq.cm. at an engine speed of 500 to 600 r.p.m.).

CAUTION: Prior to cranking the engine, run the starter 1 or 2 times until its speed reaches 8000 - 15,000 r.p.m. (depending on the rise of gas temperature in the exhaust pipe) with the purpose of burning the remaining oil.

Having cranked the engine, drain the oil through the cock (having a clear opening of 8 mm) located on the oil sump of the lower drive;

(c) check the amount of oil in the tanks by using a dip stick, and replenish the tanks with oil preheated to a temperature of 60 - 80°C (each tank should contain 30 lit. of oil).

17. If the main fuel filter is to be dismantled and the filtering assembly is to be extracted, proceed as follows:

(a) drain all fuel from the filter through the drain cock, having lifted up its upper cover with the filtering assembly to let in the air;

(b) dismantle the filter, with the fuel shut-off cocks closed;

(c) fit a cap onto the outlet port of the filtering assembly, and cover the filter casing with cloth to keep off dirt;

(d) when handling the filtering elements, use special tongs (Fig.106) and protective caps to prevent foreign matter and dirt from getting into the elements. The tongs and caps are contained in the aircraft tool kit;

(e) clean the filtering elements with a fine hair brush when washing them (Fig.107).

[redacted]

50X1-HUM

2. AIR SYSTEM

When inspecting the air system refer to "Inspection Guide No.2H , Part I" besides check the following:

1. Condition of the flexible hoses (see that they are not damaged, twisted or crushed at the bends).

2. Clearances between the pipe lines and fixed components of the aircraft frame, as well as between the pipe lines and moving parts.

The clearances should not be less than 5 mm and 10 mm respectively.

In some places clearances are allowed to be reduced to 3 - 6 mm, provided the place is not farther than 150 mm from the point of the pipe attachment.

3. Air pressure in the bottles by the readings of pressure gauges MB-250u arranged as follows:

- in the left pilot cabin, at frame No.7;
- on the hatch pressurization board located on the right pilot air panel at frame No.6;
- in the navigator's cabin, at frame No.4, starboard side.

Charging System with Compressed Air from Ground Bottle

To charge the system with compressed air delivered from ground bottles, proceed as follows:

1. Close all the cocks and remove the cap from the charging connection.

2. Bring the bottles under the port engine, connect the charging hose to one of the bottles, blow it with compressed air, and then connect the hose (with the system shut-off cock 219K closed) to the aircraft charging connection located on the left air panel, at frame No.43. The ground bottles should be arranged on a support in an inclined position, with the valves pointing upwards.

3. Make sure the drain cocks of the oil traps on the air panels of the starboard and port engines are closed.

4. Open the system shut-off cock located on the air panel; then open the valve of the ground bottle and watch the aircraft pressure gauges indicating an increase in the air system pressure.

5. The system should be charged to a pressure of 100 - 140 kg/sq.cm. As soon as the specified pressure is built up, close the shut-off cock on the air panel, then close the valve on the ground bottle, detach the charging hose, and fit the cap onto the charging connection.

CAUTION: 1. Prior to detaching the charging hose, with the ground bottle valve and the system shut-off cock closed, bleed pressure from the hose by loosening the union nut on the bottle valve by 0.5 - 1 turn.

2. The aircraft is allowed to be flown, provided the minimum pressure in the air system is not below 80 kg/sq.cm., engine starting on the ground requires a pressure of not less than 60 kg/sq.cm.

Checking Air System on Ground

Checking the air system includes:

1. General inspection of the entire system for tightness, which is performed after the aircraft is equipped with all special installations, reducing valves (units 438), pressure control units АДУ-2 (units 203Д), and after the compressed air consumers have been cut off. To check the general tightness of the system it is necessary to charge the system to a pressure of 140 kg/sq.cm. and to maintain this pressure for 30 min., without opening the consumer cocks. The tightness of the system may be considered adequate, if pressure within the above period drops to 110 kg/sq.cm. The pressure drop in the system is indicated by aircraft pressure gauges MB-250u; the readings may somewhat differ but they must not be below 110 kg/sq.cm.

In case one of the pressure gauges reads a pressure that is below 110 kg/sq.cm., find out the cause of air leakage from the system and eliminate it.

2. Checking the shut-off valves incorporated in the cabin pressurization line for proper operation.

To check the shut-off valve control equipment:

(a) watch pressure gauge MB-250u located on the right pilot air panel (Fig.108) to see that the pressure in the system amounts to not less that 50 kg/sq.cm.;

(b) open the shut-off cock of reducer H7610-10; pressure gauge MB-10u should read the following pressure values:

$4^{+0.9}$ kg/sq.cm., with pressure upstream of the reducer equal to 50 kg/sq.cm.;

$4^{+0.6}$ kg/sq.cm., with pressure upstream of the reducer amounting to 100 kg/sq.cm.;

$4^{+0.2}_{-0.1}$ kg/sq.cm., with pressure upstream of the reducer equal to 150 kg/sq.cm.

The shut-off cock of reducer H7610-10 and pressure gauge MB-10u are located on the right pilot air panel;

(c) open the cocks controlling the shut-off valves in the pressurization line, and check aurally the operation of the shut-off valves arranged on the engines (the shut-off valve should produce a click). The shut-off valve control cocks are located on the right pilot panel mounting the equipment designed for control of cabin pressurization and of the wing de-icing devices, whereas the shut-off valves are mounted on the flanges of the engine compressor middle housings;

(d) close the control cocks causing the air from the shut-off valves to be bled into the atmosphere via the control cocks;

(e) after repeating the operations described in Points (c) and (d), keep the control cocks open for 15 min. having closed the cock of reducer H7610-10. Within this period of time, pressure drop, as indicated by pressure gauge MB-10u, should not exceed 1 kg/sq.cm.;

(f) close the shut-off valve control cocks.

3. Checking the hatch doors and the pilot canopies for proper tightness. To check the hatch doors and the pilot canopies for tightness, proceed as follows:

(a) close the access hatches and set all jettison control handles in the CLOSED (ЗАКРЫТО) position;

(b) open the shut-off cock of reducer H7610-10 and shut-off cock HATCH PRESSURIZATION (ГЕРМЕТИЗАЦИЯ ЛЮКОВ) arranged on the right pilot air panel. Having ascertained that the pressurization hoses are being filled with air, keep the cocks open for 1.5 to 2 min. until pressure ceases to rise which is indicated by pressure gauge MB-10u, then close the cock of reducer H7610-10;

(c) keep the pressurization hoses under pressure for 15 min. During this period of time, pressure drop in the hoses, as measured by pressure gauge MB-10u, should not exceed 1 kg/sq.cm.;

(d) close cock HATCH PRESSURIZATION and open the access hatches.

4. Checking the wing de-icing devices shut-off valve controls. To check the controls:

(a) open the cock of reducer H7610-10 and the cock controlling the shut-off valves of the wing de-icing devices. This should cause the shut-off valves on the engines to operate (which is evidenced by a click). The shut-off valves are mounted on the flanges of the compressor rear housings, whereas the control cock is arranged on the pressurization and wing de-icing devices panel;

(b) close the control cock; the air from the shut-off valves should be bleeding through the control cock;

(c) after repeating the operations described in Points (a) and (b), keep the control cock open for 15 min. having closed the cock of reducer Н7610-10. Pressure drop as read by pressure gauge МВ-10м should not exceed 1 kg/sq.cm.;

(d) close the cock controlling the wing de-icing devices.

5. Checking the air blow-off band and engine cowl shutter controls. For checking these controls:

(a) by the readings of pressure gauge МВ-250м arranged on the left pilot's side make sure that the pressure in the system amounts to 100 - 140 kg/sq.cm.;

(b) open upper covers Nos 2 and 3 of the cowls to gain access to the air blow-off band control button arranged on the engine and to observe the operation of the blow-off band control mechanism;

(c) press the blow-off band control button, with circuit breaker AIR COCK (ВОЗДУШНЫЙ КРАН) mounted on the left pilot circuit breaker panel turned on; then screw the wing nut off the stud. This will bring the solenoid-operated air cock to action, whereas the cowl shutters will close;

(d) release the blow-off band control button. The band and the cowl shutters should open;

(e) open and close the bands and the shutters, repeating the procedure two times; check the respective control mechanisms for prompt operation; make sure the band and the cowl shutters operate synchronously; check the air system for leakage aurally;

(f) press the blow-off band control button and screw the wing nut onto the stud.

CAUTION: When checking the operation of the mechanisms controlling the air blow-off band and the cowl shutters, take care to see that no foreign matter finds its way into the engine compressor through the air blow-off ports. Guard the cowl shutters against damage.

6. Checking the engine de-icing devices cock controls. To check the controls:

(a) ascertain (by the readings of pressure gauge МВ-250м mounted on the left pilot's side) that the pressure in the system amounts to not less than 60 kg/sq.cm.;

(b) open the engine de-icing devices control cock, arranged on the right pilot's board. This should cause the control mechanism cylinder to open the throttle valve on the engine, thereby allowing heated air to flow into the de-icing devices;

(c) close the control cock. This should make the control mechanism cylinder close the throttle valve on the engine, thereby causing the air from the control system to be bled through the control cock. Repeat the above check twice;

(d) check the cock controls for tightness, for which purpose set the control cock in the OPEN (ОТКРЫТО) position, and watch pressure gauge МВ-250м mounted on the left pilot's side to read pressure drop in the system during 15 min. In case of adequate tightness of the controls, the pressure drop should not exceed 5 kg/sq.cm.;

(e) close the control cock.

[redacted]

50X1-HUM

3. SERVICING AIRCRAFT WITH FUEL AND OIL

Servicing Aircraft with Main Fuel

1. Main fuel grades used by engines РД-3М are referred to in the perform- ta of the power-plants.

2. Prior to delivering main fuel into the aircraft tanks, de-energize the craft mains, ground the aircraft and the refuelling truck, and check the rtificate of the fuel to be delivered into the aircraft tanks; make sure the fuelling truck is sealed and the fuel sediment is drained off.

3. If the refuelling truck system incorporates a compound filter (felt with ilk cloth) and a strainer in the fuel dispensing gun (having 4000 meshes per 1 sq.cm.), fuel may be supplied directly into the aircraft tanks. When ceeding in this manner, take care to see that the refuelling truck filters washed in due time and are kept in good repair.

4. The maximum amount of fuel delivered into the tanks is checked against the level set by the refuelling float. Refuelling floats (Dwgs Н9961-500 and 961-600) are incorporated in every aircraft equipment set and are designed to ck fuel delivery into the tank groups with the purpose of preventing fuel rflow (See Fig.102).

hen a tank group is filled partly the amount of fuel to be delivered into the tanks is checked by the readings of the refuelling truck flow meter.

5. The order of tank filling (Fig.109) (the reverse order of fuel consumption from the tanks) is presented in Table 12, whereas the data pertaining to checking the amount of fuel delivered into the tanks are given in Table 13.

Table 12

Order of Tank Group Filling

Port side					Starboard side				
No. of tank group and order of tank filling	No. of tank belonging to group	Tank group capacity, as measured by refuelling float, lit.	No. of tank furnished with filler	Marking of tank group refuelling float	No. of tank group and order of tank filling	No. of tank belonging to group	Tank group capacity, as measured by refuelling float, lit.	No. of tank furnished with filler	Marking of tank group refuelling float
1	2	3	4	5	6	7	8	9	10
V(1)	6 (left)	2700	6(left)	"5 group"	V(1)	6(right)	2700	6(right)	"5 group"
IV(2)	12 - 16 (left)	3050	12(left)	"4 group"	IV(2)	12 - 16 (right)	3050	12(right)	"4 group"
III(3)	7 - 11 (left)	5850	7(left)	"3 group"	III(3)	7 - 11 (right)	5850	7(right)	"3 group"
II(4)	4	3350	4	"2 left group"	II(4)	3	3150	3	
I(5)	1 and 2	6900	2	"1 left group"	I(5)	5	7200	5	"1 right group"

Notes: 1. Tank No.3 has a level indicator housed in the tank proper.
2. Tank groups V, IV, and III (at the aircraft port and starboard sides) have one refuelling float each.

[redacted]

50X1-HUM

3. Total capacity of the aircraft fuel tanks amounts to 43,800 lit.
4. Order of tank group filling is indicated for each of the aircraft sides by the numbers in brackets.

T a b l e 11

Data to Be Referred to while Checking Amount of Main Fuel Delivered into Aircraft Tanks by Means of Fuel Gauge System C3TC-60M and for Checking System C3TC-60M Proper

Amount of fuel delivered into aircraft tanks, lit.	No. of tank group	No. of tank in group	Colour of pilot lamp in system C3TC-60M				Tanks with booster running		
			blue		green		number of pumps	No. of tank in group	pump
			number of lamps	No. of tank group	number of lamps	No. of tank group			
1	2	3	4	5	6	7	8	9	10
Tanks filled to capacity:									
14,100	I	1, 2, and 5	1	I	4	I	4	2 and 5	Nominal
6500	II	4 and 3							
11,700	III	7 - 11 (right and left)							
6100	IV	12 - 16 (right and left)			2	IV	2	16 and 16	Stand-by
5400	V	6 right and 6 left							
Total . . . 43,800									
0	I	1, 2, and 5	1	I	4	I	4	2 and 5	Forced
6500	II	4 and 3	1	II	2	II	2	4 and 3	Nominal
11,700	III	7 - 11 (right and left)							
6100	IV	12 - 16 (right and left)			2	III	2	16 and 16	Stand-by
5400	V	6 right and 6 left							
Total. . . 29,700									
0	I	1, 2, and 5	1	I					
0	II	3 and 4	1	II	2	II	2	4 and 3	Forced
11,700	III	7 - 11 (right and left)	1	III	2	III	2	10 and 10	Nominal
6100	IV	12 - 16 (right and left)			2	IV	2	16 and 16	Stand-by
5400	V	6 right and 6 left							
Total. . . 23,200									
0	I	1, 2, and 5	1	I					
0	II	3 and 4	1	II					
0	III	7 - 11 (right and left)	1	III	2	III	2	10 and 10	Forced
6100	IV	12 - 16 (right and left)	1	IV	2	IV	2	16 and 16	Nominal
5400	V	6 right and 6 left			2	V	2	6 and 6	Stand-by
Total. . . 11,500									
Example No.1 (a) fuel remaining in aircraft tanks: 6600^{+400}_{-200} (b) fuel supplied:									
0	1	1, 2, and 5	1	I					
0	II	4 and 3	1	II					
0	III	7 - 11 (right and left)	1	III	2	IV	2	16 and 16	Nominal
1200^{+400}_{-200}	IV	12 - 16 (right and left)	1	IV	2	V	2	6 and 6	Stand-by
5400	V	6 right and 6 left							
Total. . . 13,200									
Example No.2 (a) remaining fuel: 6600^{+400}_{-200} (b) fuel supplied:									
0	I	1, 2, and 5	1	I					
0	II	4 and 3	1	II					
0	III	7 - 11 (right and left)	1	III					
0	IV	12 - 16 (right and left)	1	IV			2	16 and 16	Nominal
5400	V	6 right and 6 left			2	V	2	6 and 6	Stand-by
Total. . . 12,000									
Example No.3									
0	I		1	I					
0	II		1	II	Dead				
0	III	All tanks	1	III			2	16 and 16	Nominal
0	IV		1	IV			2	6 and 6	Stand-by
0	V								

Notes: 1. For checking fuel gauge system C3TC-60M it is necessary to

[redacted]

50X1-HUM

turn on: two circuit breakers АЗС-2, three circuit breakers АЗ, four change-over switches controlling amplifier supply and the change-over switch controlling the stand-by booster pumps of tank group IV.

2. Filling some tank group to capacity (as read off the refuelling float dial) and switching on fuel gauge system СЭТС-60М afterwards will be accompanied by starting the booster pumps of the tank group in question as well as of the preceding tank group, no matter whether it contains fuel or not. In this case the pump of the tank group filled with fuel will run at a nominal duty, whereas the empty tank group pumps will operate at a forced duty.
3. The booster pumps of tank group I will be cut off as soon as the amount of fuel in tank No.4 diminishes to 2450±250 lit., and in tank No.3 to 2250±250 lit.
4. The booster pumps of tank groups I and II stop when the amount of fuel in tank group III decreases to 5000±250 lit.
5. The booster pumps of tank groups I, II, and III are put out of operation when the amount of fuel in tank group IV decreases to 2300±250 lit.
6. The booster pumps of tank group V start running as soon as fuel in tank groups I and II is used up and the amount of fuel in tank group III is reduced to 250±150 lit.
7. With the fuel amount in tank group IV decreased to 600^{+200}_{-100} lit. or less, the red pilot lamp lights up and keeps glowing thereby indicating that the amount of fuel left is sufficient for 30 min. of flight.
8. When the amount of fuel in tank group V decreases to 1600±100 lit or less, the red pilot lamps light up and keep glowing thereby indicating that the amount of fuel left is sufficient for 30 and 15 min. of flight.

With the fuel completely used up or drained off, the tanks should be filled starting from group V; in case not all of the fuel has been consumed, those tank groups should be filled first which require replenishment.

6. The amount of fuel to be supplied into the aircraft tanks depends on the mission to be fulfilled. The unit engineer calculates the amount of fuel required, proceeding from the flight graph. The amount of fuel held by all of the tank groups as well as by the individual tank groups is indicated by the fuel gauges of the СЭТС-60М system.

The difference between the calculated amount of fuel required and the amount actually contained in the aircraft tanks will represent the amount of fuel to be added.

CAUTION: 1. If some tank group is to be filled to capacity, never fail to deliver the specified amount of fuel into it, since operation of the СЭТС-60М automatic equipment will be affected in case some of the fuel is transferred to the next tank group.
2. No extra fuel should be supplied into the tanks to prevent fuel from being spouted out of the tank vent system.

7. Prior to servicing the aircraft with fuel place special protective walks on the upper surface of the wing.

This done, check to see that the fuel dispensing guns and floats ar
an rub the aircraft skin around the filler caps, ground the fuel dispensing
gun, and open the tank filler plugs by pressing the filler button carrying the
scription PRESS (НАЖМИ) (Fig.110). This will cause the spring to force the
filler plug out of the shell.

8. Insert the refuelling floats into the tank fillers and proceed delivering
fuel into the tanks.

The float pointer (See Fig.102) will tell if the given tank group is filled
to capacity or not.

The pointer setting against letter П denotes that the specified amount
of fuel (by volume) has been delivered into the tank group;

Tank No.3 is furnished with a permanent fuel level indicator accommodated
in the tank proper. With tank No.3 filled up, word FULL (ПОЛНО) appears in the
peep hole (Fig.111).

CAUTION: Do not allow rain water or snow to find their way into the tank fillers.

9. Having serviced the aircraft with fuel, remove the refuelling floats
from the tanks, close the tank fillers, and connect the aircraft mains to the
ground power supply source for checking fuel gauge system СЭТС-60М. Then turn
on inverter ПО-4500 and fuel gauge system СЭТС-60М to check the system auto-
matic equipment for proper operation and the fuel gauges for correct readings,
proceeding from the actual amount of fuel delivered into the tanks.

Set the pointers of fuel flow meter indicators РТС-16 of each engine against
the divisions corresponding to the amount of fuel contained in the tank groups.

If prior to refuelling the aircraft fuel was completely drained off from
the fuel system, expel air from the pipe lines carrying fuel to the engines,
proceeding as follows:

(a) set control system circuit breaker AUTOMATIC-MANUAL (АВТОМАТ-РУЧНОЕ)
in the MANUAL position;

(b) start the booster pumps of the tank groups from which fuel is to be
fed to the engines;

(c) turn out the plugs located upstream of pumps ЦН-28 and ЦН-15 of both
engines;

(d) open the fuel shut-off cocks and drain fuel through the pipe unions
of pumps ЦН-28 and ЦН-15 till the issuing jet of fuel contains no air bubbles;

(e) close the fuel shut-off cocks, turn in and lock the plugs upstream
of pumps ЦН-28 and ЦН-15.

Checking Automatic Fuel Gauge System СЭТС-60М

Automatic fuel gauge system СЭТС-60М ensures definite sequence of fuel
consumption from the tanks (in compliance with the aircraft balancing require-
ments), as well as measuring the amount of fuel in the tank groups, the two
functions of the system being not dependent on each other. Automatic control
of the fuel consumption from the tanks is accomplished through the use of two
(right and left) amplifiers УАТ-52-5 connected in parallel. Should the auto-
matic equipment fail, provision is made in the system for controlling the fuel
consumption manually.

Data relating to the sequence of fuel consumption from the tanks are pre-
sented in Table 14. Fuel is consumed from the tanks in a sequence providing

[redacted]

for preservation of the aircraft balance within the permissible limits both in flight and at landing.

CAUTION: To avoid discharging the aircraft storage batteries , the CЭТС-60M system should be turned on with only one engine running, or when the aircraft mains is connected to the ground power supply source.

The CЭТС-60M system is checked when measuring the amount of fuel left in the tanks and after servicing the aircraft with fuel.

To check the system proceed as follows:

1. Make sure that the aircraft mains is energized and that the following circuit breakers mounted on the right-hand panel are switched on: A3C-2 (fuel consumption control), A3C-5 (fuel consumption automatic control), A3C-2 (control of the stand-by pumps of tanks Nos 6 and 16), A3C-2 (measuring fuel in a tank group), and A3C-2 (left-hand and right-hand fuel pump signalling system).

2. Switch on inverters ПО-4500 to obtain 115 V A.C.

3. Switch on the circuit breaker mounted on the fuel supply control panel and controlling automatic fuel consumption; set circuit breaker AUTOMATIC-MANUAL in the AUTOMATIC position.

4. Check the measuring equipment of the system, for which:

(a) switch on two circuit breakers A3C-5 controlling the supply circuit of the fuel gauges and mounted on the right pilot instrument board;

(b) press the buttons located on the system fuel gauge indicators which will cause the indicator pointers to set in the zero position;

(c) shift the handles of the ПП-7 switches from the OFF to the TOTAL, 1 GROUP, 2 GROUP, 3 GROUP, 4 GROUP, and 5 GROUP positions, and read the amount of fuel in each of the tank groups off the inner scale; read the total amount of fuel per each engine off the outer scale;

(d) compare the data obtained with the actual amount of fuel delivered (as measured by the refuelling truck fuel flow meter) making allowance for the system fuel gauge error. This error should not exceed ± 4 per cent of the rated value read off the fuel gauge indicator scale.

Note: As the PД-3M engine uses two grades of fuel (fuel T-1 and TC-1), it should be taken into account that the system fuel gauge indications will be 6 per cent less when the aircraft is serviced with fuel TC-1. Therefore, the fuel gauge error (with the aircraft tanks containing fuel TC-1) will amount to -2 to -10 per cent of the rated value, the readings being taken off the fuel gauge indicator scale.

5. Check right-hand and left-hand amplifiers УАТ-52-5 for proper functioning. For this, de-energise each of the amplifiers in turn; continuous glowing of the blue pilot lamps on the fuel supply control panel (with the amplifier energized) indicates that the amplifier is in sound condition.

6. Make sure the booster pumps start operating automatically in due time, with the definite amount of fuel contained in the aircraft tanks. If the aircraft engines are at standstill, the operation of these pumps is checked aurally and also by the indications of the green pilot lamps mounted on the fuel supply control panel. Data pertaining to the indications of the pilot lamps (blue and green) and operation of the pumps with regard to the amount of fuel delivered or still remaining in the tanks are given in Table 14.

Notes: 1. With the fuel consumption controlled automatically, the manual control switches should be set in the OFF position.

2. The booster pumps of tank group IV are not capable of automatic starting, therefore, they should be started manually by switching on the circuit breaker with the inscription STAND-BY PUMPS (ДЕЖУРНЫЕ НОМЕР).

3. The booster pumps of tank group V are checked for proper operation by switching on manual control circuit breaker A3C-5 (controlling tank group IV) and by switching on circuit breaker STAND-BY PUMPS which will result in starting the booster pumps of tank groups IV and V.

4. The signalling system functions in the same manner no matter whether the booster pumps are controlled manually or automatically.

7. Check the booster pumps for proper manual control by switching over circuit breaker AUTOMATIC-MANUAL from the AUTOMATIC to the MANUAL position. With circuit breaker A3C-5 (manual control of the booster pumps) set in the OFF position, the green pilot lamps on the fuel supply control panel should go out. Switch on the booster pumps of the tank groups in turn manually and check them for proper operation aurally and by the indications of the green pilot lamps.

8. After checking the system and finding the exact amount of fuel (total and in each of the tank groups), set the pointers of fuel flow meters PTC-16 against the divisions corresponding to the total amount of fuel (per each engine) as read by the fuel gauges, or ascertain that the fuel flow meter pointers are set in positions conforming to the readings of the system fuel gauges.

To set the pointers of fuel flow meters PTC-16 in correct positions, set the fuel flow meter switches in the ON position, and bring their pointers to the required divisions with the aid of the adjusting screw located in the lower part of the fuel flow meter indicators. Fuel flow meter PTC-16 indicates the amount of fuel remaining in the tank groups supplying the given engine, provided the fuel is fed to the engine in question only.

CAUTION: In the case of fuel leakage from the system, or fuel delivery to the engine via the cross-feed line, fuel flow meters PTC-16 will not read the actual amount of fuel remaining in the aircraft tanks.

Table 14

Sequence of Fuel Consumption from Aircraft Tanks as Controlled by Automatic System СЗТС-60М

Sequence of fuel consumption from tanks	Fuel consumed from tanks							Pilot lamps glowing				Booster pumps switched on or off				
	No. of tank group	aircraft port side, or left engine			aircraft starboard side, or right engine			blue		green		pumps switched on			pumps switched off	
		tank No.	amount of fuel as read by system fuel gauge, lit.	amount of fuel as read by fuel flow meter PTC-16, lit.	tank No.	amount of fuel as read by system fuel gauge, lit.	amount of fuel as read by fuel flow meter PTC-16, lit.	number	No. of tank group	number	No. of tank group	number	tank No.	pump duty	number	tank No.
1	2	3	4	5	6	7	8	9	10	11	12	13	14	15	16	17
1	I	1,2	6900	20,000	5	7200	20,000	1	I	4	I	4	2, 5	Nominal		
										2		2	16 right and 16 left	Stand-by		
2	I	1,2	250±150	13,350±150	5	250±150	13,050±150	2	I, II	4	I	4	2, 5	Forced	4	2 and 5
	II	4	2450±250	12,450±250	3	2250±250	12,150±250	2	II	2	II	2	3, 4	Nominal		
										2	IV	2	16 right and 16 left	Stand-by		
3	II	4	2450±250	-	3	2250±250		2	I, II	2	II	-	3, 4	Nominal		
			250±150		3	250±150		2	I, II	2	II	-	3, 4	Nominal		
										2	IV		16 right and 16 left	Stand-by		
4	II	4	250±150	10.250±150	3	250±150	10,150±150	3	I,II,III	2	II	2	3, 4	Forced	2	3 and 4
	III	7-11	5000±250	,50±250	7-11	5000±250	9050±250	3	I,II,III	2	III	2	10 right and 10 left	Nominal		
										2	IV	2	16 right and 16 left	Stand-by		
5	III	7-11	5000±250		7-11	5000±250		3	I,II,III	2	III	2	10 right and 10 left	Nominal		
			[illegible]			[illegible]				[illegible]	[illegible]	[illegible]	[illegible]	[illegible]		
6	III	7-11	250±19	4400±150	7-11	250±150	4300±150	4	I,II	2	III	2	10 right and 10 left	Forced		
	IV	12-16	2300±250	3400±250	12-16	2300±250	3300±250		III,IV	2	IV	2	16 right and 16 left	Nominal	3	10 and 10
										2	V	2	6 right and 6 left	Stand-by		
7	IV	12-16	600^{+200}_{-100}*	1700^{+200}_{-100}	12-16	600^{+200}_{-100}*	1600^{+200}_{-100}	4	I,II,III	2	IV	2	16 right and 16 left	Nominal		
									IV	2	V	2	6 right and 6 left	Stand-by		
8	V	6	1600±100**	0±100	6	1600±100**	0	4	I,II,III	2	IV	2	16 right and 16 left	Nominal		
									IV	2	V	2	6 right and 6 left	Stand-by		

*The pilot lamp lights up indicating fuel reserve for 30 min. of flight.

** The pilot lamp lights up indicating fuel reserve for 15 min. of flight.

<u>Note</u>: With the aircraft tanks filled to capacity, the pointers of fuel flow meters PTC-16 should be set against the 20,000 or 25,000 lit. division.

[redacted]

50X1-HUM

Fuel Drainage

Fuel may be discharged from the system either through the common drain cock located on the pipe lines in the engine compartments at frame No. 37, or through the drain cocks arranged as follows: in the bottom of tanks Nos 2, 3, 5, and 15 (right and left), on the pipe lines immediately aft of the booster pumps of tanks Nos 4, 6 (right and left), and 10 (right and left) (See Fig.109), and on the fine fuel filters.

Fuel from the entire system, as well as from individual tank groups, may be drained through the common drain cocks with the aid of the booster pumps, whereas individual tank groups may be emptied by gravity through the drain cocks mounted in the bottom of the tanks and on the pipe lines. In case the booster pumps are employed for partial drainage of the system, the fuel remainder may be drained through the drain cocks of the respective tank groups; if the system is being drained completely, remove the fuel remainder through the drain cocks installed on the cross-feed line, on the sump of the non-return valve of tank No. 3, and on the fine fuel filters.

When fuel is being drained with the aid of the booster pumps, the automatic equipment of the СЗТС-60Н system may be checked for proper functioning.

CAUTION: When draining fuel, open the filler plugs of the tank groups located in the wing.

Servicing Aircraft with Starting Fuel

Starting fuel is inserted into the tank of the starting system through a funnel furnished with a fine gauze (10,000 meshes per 1 sq.cm.).

Deliver 20 lit. of starting fuel into the tank prior to every flight.

Before filling the tank, check the starting fuel against the Certificate, clean the funnel, rub the skin around the filler cap, and take off the cap. Having filled the tank to capacity, close the filler.

Starting fuel drainage from the tank is accomplished through the cock arranged on the pipe line running to right engine pump ПНР 10-3М. The cock is secured to the lower part of engine nacelle frame No. 2.

Servicing Aircraft with Oil and Draining Oil System

The grades of oil used for lubrication of the РД-3М engine and the С-300-М starter are referred to in the engine performance data.

The oil system of the aircraft is replenished by the oil servicing truck, furnished with a strainer (8100-10,000 meshes per 1 sq.cm.), and an oil dispensing gun with a gauze (4000 meshes per 1 sq.cm.) or having a funnel fitted with a fine gauze (10,000 meshes per 1 sq.cm.). Prior to delivering oil, check it against the Certificate to see whether it conforms to the Specifications.

When filling the oil system for the first time after the engine has been installed in the aircraft, or after draining the system, and also when servicing the system with oil at the ambient air temperature below -40°C, preheat the oil to 60 - 80°C. The oil system capacity amounts to 30 lit. After the engine running test check the oil level in the tank and replenish oil to bring its level to the 25 - 30 lit. mark on the dip stick.

Check the oil level in the tank after every flight, and replenish oil to

25 - 30 lit.; check oil consumption by each engine, which should not exceed 1.5 kg/hr.

CAUTION: 1. Whenever it is found after flight that oil has not been consumed from the system, or the oil level in the tank has gone up, check to see whether the oil contains fuel; make sure the fuel-cooled oil cooler is intact.

2. Prior to starting the engine, check to see that the oil level in the oil tank has not decreased.

The oil system is drained in the following cases: prior to dismantling the oil system, or some of its components; when the ambient air temperature is below -40°C; or when changing oil at the specified intervals. The oil is drained through three drain cocks: the cock of the engine lower drive oil sump, the cock installed on the supply line, and the cock mounted on the pipe line connecting the fuel-cooled oil cooler to the oil tank.

4. CHECKING FUEL JETTISON SYSTEM ON GROUND

Fuel jettisoning is resorted to whenever the flying weight of the aircraft is to be reduced prior to performing emergency landing. On these occasions fuel is discharged as follows: from tanks Nos 1, 2, and 5 - with the aid of the booster pumps through the fuel jettison cocks located on tanks Nos 2 and 5, and through the pipe line serving for aircraft refuelling in flight; from tanks Nos 7-16 (port and starboard) fuel is drained by gravity through the fuel jettison cocks mounted on tanks No. 16. The respective cocks and valves are operated by compressed air. The controls of the fuel jettison system are arranged on the left pilot panel.

Operating pressure in the air system controlling the cocks and valves serving for fuel jettisoning amounts to 60 kg/sq.cm.

Note: The fuel jettison cocks and valves will yield to a pressure of 30 kg/sq.cm., but in this case they may open but partially.

Checking the fuel jettison system during preflight and postflight inspections of the powerplants consists in checking the cocks and valves as well as the air lines of the fuel jettison control system for tightness.

When checking the fuel jettison system, proceed as follows:

1. Check to see that pressure in the system (as read by pressure gauge МВ-250м mounted on the port side at the left pilot panel) amounts to not less than 60 kg/sq.cm. If pressure in the system is below the specified value, boost-charge the system making use of a ground compressed air bottle.

2. In case tanks Nos 1, 2, and 5 contain fuel, run the respective booster pumps in turn for 3 to 5 min, making sure no fuel leakage shows up in the pipe line located at the tip fairing of the left wing and serving for aircraft refuelling in flight; check to see that there is no fuel in the above pipe line when opening the drain cock mounted on the fuel jettison junction line at the fuel jettison cock of tank No. 5.

3. After flight, check to see whether there are any fuel runs at the access panels under the fuel jettison valves of right-hand and left-hand tanks No. 16.

4. When servicing the aircraft with fuel or checking the amount of fuel remaining in the tanks prior to refuelling, with tank group III empty and tank group IV filled to capacity, check by the readings of the fuel gauges whether fuel from the filled tank group flows into the empty tank group through the fuel jettison valve located between the tanks.

[redacted]

5. INSTALLATION AND REMOVAL OF BAG-TYPE FUEL TANKS, INSPECTION OF TANKS ON AIRCRAFT, AND SAFETY PRECAUTIONS TO BE OBSERVED

General

1. With the ambient air temperature below 0°C, the tanks to be installed in the aircraft should be left for 15 to 18 hours in a warm room at a temperature of + 15 to + 18°C or preheated for 1.5 to 2 hours with dry air delivered into the tanks through a filter and having a temperature of 30 to 40°C. After preheating, the tank is to be immediately installed in the aircraft, so as not to allow its walls to cool down to below 0°C.

2. If thetank is installed in or removed from the aircraft at sub-zero air temperatures, a housing of covers should be arranged at the place of tank installation to protect the respective surfaces of the fuselage or wing. The housing should be heated for two hours with warm air delivered from ground installation МПД or МП-44-Д , the temperature of the outgoing air being not in excess of + 40°C.

3. Prior to installing or removing a fuel tank, the aircraft should be cut off the power supply source, grounded, and mounted on hydraulic jacks.

Safety Precautions to Be Observed when Installing, Removing and Inspecting Bag-Type Fuel Tanks

1. Handling the bag-type fuel tanks may be entrusted only to personnel well acquainted with the safety regulations.

2. When carrying out some operations inside the tank, do not fail to observe the following safety measures:

(a) stand on a clean, soft mat, wear a clean overall, slippers made of cloth, and a gas mask with the hose led out;

(b) use copper-plated tools having no sharp edges, place the tools on the mat;

(c) employ an explosion-proof, sealed electric lamp (type PH-100) supplied with voltage not exceeding 24 - 36 V;

(d) the person inside the tank should be kept under constant observation so that timely medical aid could be rendered as soon as possible in case of intoxication caused by fuel vapours.

Inspection of Bag-Type Fuel Tanks on Aircraft

To inspect the bag-type fuel tanks on the aircraft perform the following operations in the recommended sequence:

1. Drain fuel from all the tank groups.

See that no fuel gets on the external surface of the tanks. If some fuel does get on the above surface, wipe the respective areas dry with a clean rag and blow with dry air.

2. Mount the aircraft onto hydraulic jacks.

3. Remove aircraft frame panels barring access to the tank mounting hatches.

4. Fit a dummy panel having an opening to provide access to the tank mounting hatch under each of the tanks; the dummy panel will prevent sagging of the tank bottom or bending of the mounting hatch frame, which is likely to be caused by the man climbing into the tank.

Secure the dummy panel with 12 bolts (6 bolts at each of the panel sides) to the load-carrying profiles of the frame, making use of the bolts which have been removed from the frame panel dismantled.

5. Back out the bolts holding down the tank mounting hatch cover, then lift the cover, inspect it, and place into the respective recess of the rack.

To avoid deforming the cover, remove the bolts in the following manner:

- first slacken the bolts by turning each bolt by 3 to 4 revolutions, using socket wrench;
- then remove the bolts by hand or with a socket wrench. When removing the remaining bolts, press the cover against the tank..

CAUTION: Care should be exercised when removing the cover to prevent fuel remaining in the tank from being spurted in the face of the maintenance man.

6. Remove remaining fuel from the tank by using a clean lintless wad or chamois leather, then wipe the tank dry.

7. Prior to inspecting the tank, ventilate it for 12 to 24 hours, and then blow it for 30 min. with dry filtered compressed air.

8. Thoroughly inspect the internal surface of the tank and all its joints for the following defects:

(a) mechanical damage (punctures, tears, etc.);

(b) contamination of the surface with paint, oil, and other agents;

(c) bands attaching tank hoops coming off the inner layer;

Note: The band edges coming off the inner layer should not exceed 10 mm in width and 50 mm in length.

(d) fringing of band edges and eyes fastening the hoops; fringing or rupture of strings attached to the eyes;

(e) lint on the bands and on the internal surface of the tank;

(f) flanges of the tank fittings coming off the tank walls;

(g) edges of the kerosene-resistant layer coming off the tank walls around the flanges of the tank fittings;

(k) swelling of rubber laid in the protected wall of the tank under the internal kerosene-resistant layer.

9. After completion of the tank inspection and prior to closing the mounting hatch, enter the date of inspection and the operations performed in the tank Certificate, ascertain that the tank is clean and does not contain any foreign objects, make a corresponding entry in the Certificate.

Operations pertaining to installation and dismantling of the tanks should be carried out as laid down in "Ту-16 Aircraft, Repairs Manual", Part I, Book 2.

Having completed the operations pertaining to fuel tank opening, lower the aircraft and remove the jacks.

[redacted]

50X1-HUM

6. FAULTS AND REMEDIES

Nos	Fault	Cause	Remedy
1	2	3	4
		AIR SYSTEM	
1	System is not tight (as indicated by left pilot pressure gauge MB-250n), with consumers cut off	1. Leaky safety valve (unit 438) on frame No. 13, at left spherical bottle (3-lit. capacity at 150 kg/sq.cm.) located in nose wheel bay (Fig. 112)	Air leakage can be detected aurally. Replace safety valve
		2. Leaky safety valve of reducer PB-60 located at starboard side in fuselage compartment Φ-2 at frame No. 9	Air leakage can be detected aurally. Replace reducer
		3. Leaky reducer 669300/Б installed at starboard side in fuselage compartment Φ-2 at frame No. 9	Air leakage through reducer can be detected aurally. Replace reducer
		4. Leaky drain cock of moisture trap located at starboard side in fuselage compartment Φ-2 at frame No. 9	Air leakage can be detected aurally: (a) close drain cock if open (b) replace moisture trap and drain cock
		5. Cannon mount air supply system is not tight	Eliminate air leakage by tightening up joints
		6. Leaky solenoid-operated air cock 252800 incorporated in engine fire-fighting system	Replace cock
		7. Leaky cock controlling engine de-icing system	Replace cock
		8. Leaky fuel jettison control cock	Replace cock
		9. Air leakage through joints of pipe lines running from non-return valve 998A4 of left spherical bottle (3-lit. capacity at 150 kg/sq.cm.), located in nose wheel bay, to control cock	Air leakage can be detected with the aid of soapy water applied to pipe line joints. Eliminate leakage by tightening up respective joints
2	System is not tight (as indicated by left pilot pressure gauge MB-250n), with engine de-icing device control cock turned on	1. Air leakage through joints of pipe lines incorporated in engine de-icing device valve control system	Air leakage is detected by applying soapy water to pipe line joints. Eliminate leakage by tightening up pipe line nipple joints
		2. Air leakage from cylinder of throttle valve control mechanism	Replace cylinder
3	System is not tight (as indicated by right pilot pressure gauge MB-250n), with consumers cut off and cock of reducer located on right pilot air panel open	1. Leaky safety valve (unit 438) on frame No. 31 at right spherical bottle (3-lit. capacity at 150 kg/sq.cm.) located in nose wheel bay (See Fig. 112)	Air leakage is detected aurally. Replace safety valve
		2. Leaky moisture absorber housing mounted on frame No. 12	Replace moisture absorber
		3. Leaky safety valve of reducer H7610-10 located on right pilot air panel (Fig. 113)	Replace reducer
		4. Leaky gland in cock of reducer H7610-10 located on right pilot air panel	Replace reducer
		5. Leaky shut-off valve mounted on right pilot air panel	Close shut-off valve; if air leakage does not stop, replace valve
		6. Air leakage through joints of pipe lines running from non-return valve 998A4 of right 3-lit. bottle located in nose wheel bay to control cock	Air leakage is detected by applying soapy water; eliminate leakage by tightening up pipe line joints
		7. Air leakage through wing de-icing device shut-off valve control cock, or through one of cocks controlling cabin pressurization shut-off valves	Replace defective cock
4	System is not tight (as indicated by right pilot pressure gauge MB-250n), with cock	1. Air leakage through joints of shut-off valve control pipe lines	Leakage is detected by applying soapy water. Eliminate leakage by tightening up joints

[redacted]

50X1-HUM

1	2	3	4
	controlling wing de-icing device shut-off valves turned on	2. Damaged diaphragm in wing de-icing device shut-off valve	Replace valve
5	System is not tight (as indicated by right pilot pressure gauge MB-250n), with cabin pressurization valve control cocks turned on	1. Air leakage through joints of cabin pressurization valve control pipe lines 2. Diaphragm of cabin pressurization shut-off valve is damaged	Leakage is detected with the aid of soapy water; eliminate trouble by tightening up joints Replace shut-off valve
6	System is not tight (as indicated by right pilot pressure gauge MB-250n), with cock controlling hatch pressurization open, and aircraft entrance hatches closed	1. Hatch pressurization hose is damaged 2. Air leakage through pressure relief valve incorporated in pressurization hose 3. Air leakage through joints of pipe lines delivering air to hatch pressurization hoses	Replace defective hose Tighten up joint or replace valve Tighten up joints
7	System is not tight (as indicated by navigator's pressure gauge MB-250n), with consumers cut off	Air leakage through joints of pipe lines running from non-return valve 998A4 of 4-lit. capacity bottle located in hydraulic panel compartment to control cocks	Air leakage is detected by application of soapy water; eliminate leakage by tightening up joints
8	Pressure drops in pipe lines running along starboard side, with air being consumed from pipe lines running along port side,	Non-return valve 998A4 of right-hand 3-lit. bottle (Fig. 114) is sticky	Replace non-return valve
9	Engine compressor blow-off band fails to close ports when control button is pressed	1. Air system is not charged with air 2. Air leakage through safety valve (unit 438) mounted on pipe line serving both for charging 3-lit. capacity bottles located at frame No. 49 at 150 kg/sq.cm. and for air delivery to consumers 3. Air leakage through safety valve of reducer PB-50H mounted on engine 4. Air leakage through joints of pipe lines running from non-return valve, housed in engine nacelle, and from service bottle at frame No. 49 to solenoid-operated cock 2512800 mounted on engine	Charge air system using ground bottle Replace safety valve Replace reducer. PB-50H Air leakage is detected by application of soapy water; eliminate leakage by tightening up joints
10	When system is being charged from ground bottle, air flows from charging line to line running from compressor AK-150H to bottles	Non-return valve of port engine pressure control unit AДУ-2 (unit 208Д) is binding	Pressure in oil trap of left-hand air panel in indicative of defective valve. Replace pressure control unit
11	System is charged with air from compressors AK-150H at too slow rate both on ground (with engines running) and in flight irrespective of engine rating (Fig. 115)	1. Drain cocks of engine air panel oil traps are not closed tightly 2. Adjustment of low-pressure reducer (unit 436) is disturbed 3. Pressure control unit AДУ-2 (unit 208Д) is out of adjustment, which causes compressor to permanently run idle when pressure in system is below 155^{+5}_{-10} kg/sq.cm.	Close drain cocks Check low-pressure reducer technical characteristics against Certificate data. Replace reducer if some discrepancy is found. Check new reducer prior to installing it Try out each engine in turn, and determine time required for charging bottles to normal pressure to see which of pressure control units is out of adjustment. Replace defective pressure control unit
12	System is charged by compressors AK-150H at low rate in flight at high altitudes and at normal rate at low altitudes	Low-pressure reducer housing (unit 436) is not tight; as a result, reducer fails to operate properly at high altitude (See Fig.115)	Check technical characteristics of low-pressure reducer against Certificate data; replace reducer if some discrepancy is detected

[redacted]

50X1-HUM

1	2	3	4
13	System is charged at low rate by compressors АК-150Н both on ground with engines running, and in flight at engine speed exceeding that at which engine compressor air blow-off band closes ports	1. Air leakage through ducts of solenoid-operated air cock 2512800 mounted in engine	Air leakage can be detected aurally when control button is pressed thereby causing air blow-off band and cowl shutters to close. Replace solenoid-operated cock
		2. Air leakage through swivel angle of solenoid-operated air cock 2512800 due to dry or damaged gaskets	Replace solenoid-operated cock
		3. Air leakage from air blow-off band control cylinders, or from engine cowl shutters control cylinders	Air leakage is detected aurally, or with the aid of soapy water applied to joints and vent holes, with cock 2512800 open. Replace leaky units
		FUEL SYSTEM	
1	With aircraft parked for prolonged periods, fuel flows through cantilever vent pipes	1. One or more tank groups arranged in wing are overfilled with fuel	Check refuelling procedure by indications of refuelling floats and refuelling truck flow meter. Drain excess fuel
		2. Intertank fuel jettison valve is leaky	Replace valve
		3. Non-return valve of tank group IV is leaky	Replace valve
2	Fuel leaks through fuel jettison valve of tank No. 16	Fuel jettison valve of tank No. 16 is not tight	Replace valve
3	With booster pumps of tank group I running, fuel flows from pipe line serving for aircraft refuelling in flight (located in wing tip fairing)	One of cocks for fuel jettison from tank group I is leaky	Replace cock
4	Unequal amounts of fuel are consumed from similar groups of tanks	Cross-feed valve is open	Close cross-feed valve. Prior to each flight check to see that cross-feed valve is closed and is not leaky

1	2	3	4
5	Amount of fuel in reserve tank group increases (as indicated by fuel gauge)	Non-return valve of reserve tank group is leaky	Replace valve
6	Pilot lamp of tank group from which fuel has been fed to engines in flight keeps glowing after it is switched off and next tank group starts feeding fuel to engines	Vent connection of pressure warning unit СД-3ТУ is fitted with cap	Take rubber cap off vent connection of pressure warning unit СД-3ТУ
7	Fuel flows from vent hole of booster pump ЭЦН-Т (unit 461)	Gland packing of pump ЭЦН-Т is leaky	Replace booster pump
8	Fuel spurts from vent pipe of fuel jettison control cock	Gland packing of fuel jettison cock of tanks Nos 5 or 2 is leaky	Replace leaky cock

[redacted]

50X1-HUM

Chapter VII

ALTITUDE EQUIPMENT. CARE AND MAINTENANCE

1. BASIC SPECIFICATIONS

Pressurization Reducing Valve (PKH)

(Fig.119)

Maximum permissible pressure at the valve inlet (with the valve closed)	not in excess of 5 kg/sq.cm. (abs.)
Pressure at the reducer outlet	not in excess of $1^{+0.35}$ kg/sq.cm.(abs.)
Amount of air passing through the valve	not less than 150 kg/hr
Pressure at the outlet at which the safety valve opens	1.6 ± 0.05 kg/sq.cm. (abs.)

Air Delivery Regulator (PHB)

(Fig.120)

Amount of air passed by the regulator into the cockpit	up to 500 cu. m/hr
Amount of air passing through the pressurization reducing valve (PKH) with the regulator butterfly valve completely open	up to 500 cu. m/hr
Amount of air passing through the turbo-cooler (TXY) with the regulator butterfly valve completely open	up to 250 cu. m/hr

The delivery regulator control lever is locked in the extreme and any intermediate positions.

Air Flow Meter

Transmitter, type PBY-46y	Venturi tube diaphragm
Indicator	differential pressure gauge
Conventional volumetric units for which the indicator scale is graduated and numbered	from 0 to 10
Division value of the indicator scale	50 cu. m/hr
Pressure differential corresponding to the operating measurement range	33 to 293 mm of mercury
Flow meter temperature range	from + 50 to-60°C

Marking of the indicator connections:

(a) on the total-pressure connection of the indicator and on the wide-section connection of the Venturi tube	letter Д

(b) on the static connection of the indicator and on the narrow-section connection of the Venturi tube	letter C

Automatic Pressure Regulator (APД-54)

Surplus air pressure in the pressurized cockpit from the ground to an altitude of 20,000 m. with air consumption of up to 1000 kg/hr	not in excess of 25 mm of mercury.
Constant absolute pressure in the cockpit maintained by the regulator with air consumption from 50 to 1000 kg/hr:	
(a) at altitudes from 1800 - 2000 to 3700 - 4700 m. (at the combat rating)	596 ± 15 mm of mercury
(b) at altitudes from 1800 - 2200 to 6450 - 7850 m. (at the normal rating)	
Constant pressure differential between the cockpit and the atmosphere maintained by the regulator:	
(a) at altitudes from 3700 - 4700 to 20,000 m.(at the combat rating)	147 ± 15 mm of mercury
(b) at altitudes from 6450 - 7850 to 20,000 m. (at the normal rating)	294 ± 15 mm of mercury
Rate of pressure change when changing over from the normal to the combat rating	20 mm of mercury per sec.
Rate of pressure change when changing over from the combat to the normal rating	1.5 to 5 mm of mercury per sec.
Rate of pressure increase in the pressurized cockpit at permissible vertical speed of descent and change of air delivery from 50 to 1000 kg/hr	5 mm of mercury per sec.
Amount of air leakage through the regulator at surplus pressure of 235 mm of mercury in the cockpit	not in excess of 65 lit/min.
Solenoid D.C. operating voltage (at the combat rating)	27 ± 2.7 V
Current in the solenoid circuit	0.45 ± 0.03 A

Reducer (H7610-10) on Hatch Pressurization Panel

(Fig.121)

Reduced pressure at the reducer outlet:	
(a) at a pressure of 150 kg/sq.cm. at the reducer inlet	$4^{+0.2}_{-0.1}$ kg/sq.cm.
(b) at a pressure of 100 kg/sq.cm. at the reducer inlet	$4^{+0.9}$ kg/sq.cm.
(c) at a pressure of 50 kg/sq.cm. at the reducer inlet	$4^{+0.6}$ kg/sq.cm.
Pressure at which the reducer safety valve begins to open	6 kg/sq.cm.

[redacted]

50X1-HUM

Pressure at which the reducer safety valve is completely open .... 7 kg/sq.cm.

Pressure Gauge, Type MB-250-M, on Pressurization Panel

(Fig.122)

Maximum permissible pressure .... 250 kg/sq.cm.

Pressure operating range .... 0 to 150 kg/sq.cm.

Pressure at which the pressure gauge must remain gastight .... 250 kg/sq.cm.

Permissible measurement error within pressure operating range:

(a) at air temperature of + 20 ± 5°C .... ± 10 kg/ sq.cm.

(b) at air temperature of + 50 to 60 ± 5°C .... ± 15 kg/sq.cm.

Vibration overload withstood by the pressure gauge .... not in excess of 2.5 g

Pressure Gauge, Type MB-10-M, on Pressurization Panel

(Fig.122)

Maximum permissible pressure .... 10 kg/sq.cm.

Pressure operating range .... 0 to 6 kg/sq.cm.

Pressure at which the pressure gauge must remain gastight .... 10 kg/sq.cm.

Permissible measurement error within pressure operating range:

(a) at air temperature of + 20 ± 5°C .... 0.4 kg/sq.cm.

(b) at air temperature of + 50 to 60 ± 5°C .... 0.6 kg/sq.cm.

Vibration overload withstood by the pressure gauge .... 2.5 g

Pressurization System Desiccator

(H7610-78)

The desiccator is charged with silica gel, type КСМ

The term of the silica gel service is 25 flying hours. After this term has expired, the silica gel should be dried at 100°C for 20 minutes to be then used again in the desiccator.

Two-Way Cock (H7610-100) of Hatch Pressurization System

Time during which pressure is released from the packing hoses through the cock .... 3 to 5 sec.

Pressure for which the cock spring is calibrated .... 1 kg/sq.cm.

Pressure at which air passes into the hatch packing hoses .... 3 kg/sq.cm.

Units and Reference Instruments of Aircraft

Altitude Equipment

№	Description of unit	Type of unit	Purpose of unit	Quantity
1	2	3	4	5
	Cockpit Pressurization and Heating Systems			
1	Shut-off valve	H7601-495	Switching on and off pressurized cockpit pressurization system and wing nose de-icer system	4
2	Non-return valve of cockpit pressurization system	H7601-300	Ensuring air flow in one direction	3
3	Supply valve	H7601-631	Distributing air stream coming from engine compressor between lines running to turbo-cooler and to pressurization reducing valve (РКД)	2
4	Turbo-cooler (ТХУ)	Item 1246	Cooling and reducing pressure of air delivered to pressurised cockpits from engine compressors	2
5	Pressurization reducing valve	РКД	Reducing pressure of air delivered to pressurised cockpits to $1^{+0.35}$ kg/sq.cm. (abs.)	2
6	Air delivery regulator	H7601-485	Regulating amount of air delivered into cockpit	2
7	Air flow meter	РВУ-46у	Measuring amount of air delivered into cockpit	2
8	Cockpit air pressure automatic regulator	АРД-54	Ventilation of cockpits at low altitudes and maintaining pressure in cockpits at preestablished value at high altitudes	2
9	Combination pressure valve (ККД)	H7601-50 H7601-185	Regulating cockpit pressure by hand, emergency pressure release in cockpits and performing function of safety valve	2
10	Control valve	H7601-240	ККД combination valve control	2

[redacted]

50X1-HUM

1	2	3	4	5
11	Cockpit emergency pressure release valve	H7601-465	КВП combination valve control at emergency pressure release in cockpits from left pilot and rear gunner	2
12	Electric heater	Item 107	Warming up air delivered to glass of navigator's, pilot's, and gunner-radio operator's canopies	2
13	Cockpit air temperature regulator	TPTBK-45 (TPTBK-48Д)	Control of supply valves H7601-631 by means of electric motors, type MPT-4	2
14	Cockpit thermometer	TB-45	Measuring air temperature in cockpits	2
15	Non-return(vacuum) valve	H7601-371 H7601-308	Equalizing cockpit air pressure with the atmospheric pressure so as to protect cockpits from damage	2
16	Slide valve	H7601-575	Control of compressed air delivery to recess of shut-off valve H7601-495	3
	Cockpit Atmospheric Air Ventilation System			
17	Atmospheric air intake with electric motor, type H3K-2	H7611-50	Atmospheric air delivery to front cockpit at low altitudes	1
18	Cockpit ventilation cock	H7601-530	Control of atmospheric air delivery to rear cockpit	1
	Hatch Pressurization System			
19	Desiccator	H7610-78	Desiccating air coming into system	1
20	High-pressure gauge	MB-250-м	Measuring air pressure in system upstream of reducer H7610-10	1
21	Reducer	H7610-10	Reducing air pressure in system from 150 to 4 kg/sq.cm.	1
22	Low-pressure gauge	MB-10м	Measuring air pressure in system aft of reducer H7610-10	1
23	Two-way cock	H7610-100	Reducing air pressure coming from reducer to hatch sealing hoses from 4 to 3 kg/sq.cm. and releasing pressure from sealing hoses on opening or jettisoning hatch covers	1
24	Hatch pressurization cock	652200A-14	Delivering air into hatch sealing hoses	1
	Control Instruments			
25	Altitude and pressure differential gauge	УВПД-15	Determining cockpit altitude and pressure drop between cockpit and atmosphere	1
26	Thermometer	ТУЗ-48	Measuring temperature of air coming into front cockpit	1

2. ACCESS TO UNITS AND PIPE LINES

To ensure access to certain units and pipe lines of the altitude equipment during inspection it is necessary to dismantle other units.

Cockpit Pressurization and Heating System

To ensure access to the following units of this system:

1. To the pipe lines running along the starboard side between frames Nos 7 and 10, remove:
   - PCБ-70 station remote control panel;
   - aircraft interrogator-responsor control panel;
   - УС9-П receiver control panel;
   - hatches on the right pilot's panel.
2. To the valve control pipe lines located along the starboard side between frames Nos 10 and 12, remove:
   - thyratron interrupters located on the operator's starboard rack;
   - PCБ-70 station dynamotor located on the operator's starboard rack.
3. To the shut-off valve control pipe lines located under the floor along frame No. 9, open the floor and remove the P-2 block of the РБП-2 station.
4. To the valve control pipe lines located between frames Nos 15 and 21, do as follows:
   - open the hatch located on the top of the Ф-3 fuselage compartment between frames Nos 15 and 17;
   - remove fuel tank No.1;
   - open the hatches on the starboard side of the container of fuel tank No. 1.
5. To the pipe lines and the combination and vacuum valve installations located on the bottom of frame No. 69 in the second pressurized cockpit, remove the radio operator's seat.
6. To the valve control pipe line and to the shut-off valves located in the engine nacelle, open the third inner lower cover and the third outer lower cover of the nacelle.

All the other units and pipe lines of the system are easily accessible.

Hatch Pressurization System

To ensure access to the following units of this system:

1. To the hatch pressurization pipe line laid on the starboard side between frames Nos 6 and 11, remove:
   - PCБ-70 station remote control panel;
   - aircraft interrogator-responsor control panel;
   - УС9-П receiver control panel;
   - right pilot's seat;
   - side hatch cover on the right pilot's panel;
   - thyratron interrupters and the PCБ-70 station dynamotor on the operator's starboard rack.

2. To the reducer on the hatch pressurization panel, remove the pressurization panel.

3. To the two-way cock of the rear pressurized cockpit entrance hatch, open the hatch of the starboard ammunition bolt feed mechanism.

All the other units and pipe lines of the system are easily accessible.

3. SPECIAL INSTRUCTIONS

Preflight and postflight inspections of the equipment should be performed in compliance with the "Inspection Guide No. 2Ц", part I and the following additional instructions:

1. Prior to flight check clearances between the rods of the two-way cocks and the levers shown in Fig. 123.

The clearances of the entrance hatch cocks should be checked with the entrance doors closed.

2. Prior to flight check the outlet slots in the branch pipes and clearances between the branch pipes and the pilots' canopy glass shown in Fig. 124.

4. CHECKING EQUIPMENT WITH ENGINES

INOPERATIVE

Checking Hatch Pressurization System

1. Close the entrance hatches and the emergency escape hatches of the pressurized cockpits.

2. Check the device interlocking the two-way hatch pressurization air cock with the hatch cover jettisoning mechanisms taking into consideration that the clearances between the cock rods and the levers must be not less than 1.5 mm.

3. Make sure by the high-pressure gauge on the hatch pressurization panel that there is a pressure of 120 to 150 kg/sq.cm. in the system before the reducer.

4. Open the HIGH-PRESSURE LINE (СЕТЬ ВЫСОКОГО ДАВЛЕНИЯ) reducer cock.

5. Make sure by the low-pressure gauge that there is a pressure of $4^{+0.5}_{-0.2}$ kg / sq.cm. in the system behind the reducer.

6. Open the HATCH PRESSURIZATION (ГЕРМЕТИЗАЦИЯ ЛЮКОВ) cock. Pressure after the reducer must first drop sharply and then, with the sealing hoses being charged with compressed air, gradually increase to a value indicated in Item 5.

7. Examine the hatch pressurization system of the front and rear cockpits.

8. After the sealing hoses have been filled with compressed air and the system has been examined, close the reducer cock and measure the time of pressure drop in the system from 4 to 3 kg/sq.cm. which must be not less than 20 minutes. Pressure drop should be checked by the low-pressure gauge located on the hatch pressurization panel.

9. Release pressure from the entrance hatch sealing hoses. For this first close the hatch pressurization cock, then in the front cockpit pull out the mechanism ring and in the rear cockpit press the entrance hatch cover emergency jettisoning lever to whose axle a cam is secured. The cam presses the rocker of the two-way air cock. To prevent the rear cockpit entrance hatch cover emergency jettisoning before pressure is released from its sealing hose, the hinge lever with a roller of the hatch mechanism must be pushed back.

Pressure in the sealing hoses must decrease to zero during 3 to 5 seconds.

Check the pressure drop by the hatch pressurization panel pressure gauge with the hatch pressurization cock open.

10. Restore the interlocking of the two-way cocks with the mechanisms designed

for releasing pressure from the sealing hoses of the entrance hatches [illegible] normal pressure of $4^{+0.5}_{-0.2}$ kg/sq.cm. in the system.

Checking Cockpit Pressurization and

Heating System

1. Check for leakage the combination valve (ККЦ) control system in the front and rear pressurized cockpits. For this:

(a) in both cockpits set the control valves to the maximum pressure drop position by rotating their knobs to the left as far as they will go and seal the valves in this position;

(b) set the cockpit emergency pressure release valves to the CLOSED position by pulling out their buttons as far as they will go;

(c) by means of the КПУ-3 device build up pressure in the ККЦ valve control pipe line corresponding to 600 km/hr as measured by the airspeed indicator; at the same time deliver air to the front cockpit via the drain pipe unions located on frame No. 12 and to the rear cockpit via the drain pipe unions on frame No. 69;

(d) close the КПУ-3 device delivery cock and measure air leakage from the system by the speed change. The permissible amount of leakage must correspond to a drop of not more than 20 km/hr as measured by the airspeed indicator during 5 minutes.

2. Check the level of oil in the turbo-coolers and if necessary add the required amount of oil. Turbo-coolers are charged with oil, grade ОКБ -122-14, contained in the spare parts set. Oil must be filled not later than 1.5 or 2 hours before the turbo-cooler starts operating.

3. Check the front cockpit ventilation air intake butterfly valve for opening and closing.

For this purpose:

(a) connect the aircraft mains to the ground power supply source;

(b) on the starboard electric panel switch on the cockpit low altitude ventilation circuit breaker;

(c) switch on the cockpit low altitude ventilation switch located on the pilots' upper electric panel for opening the air intake butterfly valve and hold it pressed for 15 or 20 seconds. During this time the air intake butterfly valve (at frame No.12) must be completely open;

(d) switch on the cockpit low altitude ventilation switch for closing the butterfly valve; after 15 or 20 seconds it must get closed flush with the fuselage skin.

4. Check the air supply regulator levers (РПВ) for smooth travel and prompt locking in various positions. After checking set the regulator levers to the CLOSED position.

5. Check the slide valves located on the shut-off valve control panel (See Fig. 118, Ref. No. 8) for smooth travel and prompt locking in various positions.

6. Check the electric part of the automatic pressure regulator, type АРД -54, for proper operation in the following manner:

(a) switch on the circuit breaker;

(b) set the switches located on the instrument boards of the right pilot and radio operator to the COMBAT RATING (БОЕВОЙ РЕЖИМ) position. At this a specific click must be heard which is indicative of solenoid operation;

(c) set the switches to the NORMAL RATING (НОРМАЛЬНЫЙ РЕЖИМ) position.

[redacted]

50X1-HUM

7. Make sure that the pointers of the instruments: PBY-46y air flow meters,
УВПД-15 altitude and pressure differential gauges, ТУЭ-48 thermometers are at
zero.

8. Check the electric heaters (items 107) in the front and rear cockpits. For
this do as follows:

(a) switch on the circuit breakers in both cockpits;
(b) switch on the electric heaters by means of the switches mounted on the
pilots' upper electric panel and on the radio operator's electric panel;
(c) check by feel air temperature at the glass of the pilots', navigator's,
and radio operator's canopies; take into consideration that with the ventilator
operative the air is cool, while on switching on the heaters the air becomes warm.

5. CHECKING EQUIPMENT WITH
ENGINES RUNNING

1. Check compressed air delivery to the cockpit from the starboard and port
engines separately and from both engines together. For this do as follows:
(a) open the HIGH-PRESSURE LINE cock located on the hatch pressurization
panel and make sure that in the cockpit pressurization system there is a pressure
of 120 to 150 kg/sq.cm. before the reducer and $4^{+0.5}_{-0.2}$ kg/sq. cm. after the reducer;
(b) set the RIGHT (ПРАВЫЙ) slide valve handle on the shut-off valve control
panel to the OPEN position;
(c) set the automatic circuit breakers of the ТРТВК-45М thermostats in both
cockpits to the ON position;
(d) advance the starboard engine to 4100 r.p.m.;
(e) set the П2НПН-45 switches on the right pilot's instrument board and the
radio operator's panel to the HOT (ГОРЯЧИЙ) position. Then press the switches and
hold them pressed for 30 to 45 seconds. During this time the air valve shutters
must pass from one extreme position to the other. The check over (in 30 to 45
seconds), release both switches;
(f) by the air flow meters, type PBY-46y , make sure that with the PHB regu-
lator closed, no air is delivered to the cockpits;
(g) by slowly moving the PHB regulator lever forward check the consumption of
air delivered to the cockpits. On moving the regulator lever, the pointers of the
PBY-46y air flow meters must smoothly move clockwise thus indicating air consump-
tion in conventional volumetric units of the air flow meter. With the PHB regulator
completely open and with air delivered through the PKH reducing valve, that is when
hot air is delivered, the normal consumption is 5 to 7 units;

CAUTION: With free air temperature exceeding + 20°C, hot air delivery through
the PKH valve must not continue for more than one minute.

(h) by the ТУЭ-48 thermometer indicator located on the right pilot's instru-
ment board check the temperature of air delivered to the cockpits. At 4100 r.p.m.
and with air consumption being 6 to 8 units per each cockpit, the temperature of
air coming into the front cockpit should be within 50 to 90°C depending on the free
air temperature. The temperature of air passing into the rear cockpit is determined
by feel by the temperature of air passing out of the branch pipes as well as by a
change in the cockpit thermometer indications;
(i) set the П2НПН-45 switches on the right pilot's instrument board and the
radio operator's panel to the COLD position for 30 to 45 seconds. Then one

or two minutes after the shutter has assumed a new position the ТУЭ-48
indicator must show decrease in the temperature of air delivered to the front cock-
pit to + 25°C and lower, while the PBY-46y air flow meter must indicate decrease
in air delivery to 3 or 4 units;

Notes: 1. Prior to changing over the П2НПН-45 switches from the HOT to the
COLD position by means of the PHB regulator reduce the amount of hot
air delivered to the cockpits to 3 or 4 units so as to avoid sharp changes
of pressure in the cockpits due to different capacities of the turbo-cool-
ers and the PKH valves. After the П2НПН-45 switches have been set in the
COLD position, completely open the PHB regulator.
2. If, when bringing the П2НПН-45 switches to the COLD position, air con-
sumption and temperature do not change as indicated in Item (i), shut off
air delivery to the cockpit for a short time and then open the PHB regu-
lator again.

(j) set the П2НПН-45 switches in the AUTOMATIC (АВТОМАТ) position;
(k) set the ТРТВК-45М thermostats for 15 or 20°C. If the air temperature in
the cockpits becomes lower than the temperature the thermostat is set for, the
ТУЭ-48 thermometer must indicate an increase in the temperature of air delivered to
the cockpits as the cockpit is pressurized through the PKH valve. In case the air
temperature exceeds the temperature for which the thermostat is set, the ТУЭ-48
thermometer must indicate a decrease in the temperature of air delivered to the
cockpits, the cockpits being pressurized through the turbo-coolers;
(l) set the RIGHT slide valve handle on the control panel in the CLOSED posi-
tion; air delivery to the cockpit must cease;
(m) close the air supply regulator.

2. Check cockpit pressurization from the port engine as prescribed in Item 1,
Points (c) to (m).

3. Check cockpit pressurization simultaneously from the starboard and port
engines in the following manner:
(a) open the shut-off valves of both engines by setting the handles of the
cockpit pressurization slide valves to the OPEN position;
(b) check the consumption and temperature of air coming into the cockpits with
the PHB regulator completely open. Air consumption through the PKH valve must be
from 8 to 10 units as indicated by the flow meter and through the TXY turbo-cooler -
from 4 to 6 units. When changing over air delivery from the PKH valve to the TXY
turbo-cooler the temperature of air delivered to the cockpits must decrease.

CAUTION: 1. At free air temperature over + 20°C follow the instructions given
in the CAUTION above.
2. To prevent the air flow meter indicator from failing, see that not
more than 10 units (500 cu.m/hr) of air pass through the PKH valve.
3. Change over air delivery from the PKH valve to the TXY turbo-cool-
er and vice versa by pulses regulating air delivery by means of the PHB
regulator butterfly valve.

4. Check two or three times the upper blister heater by setting the heater
cut-off cock located in the navigator-radar operator's cockpit in the OPEN and
CLOSED positions in turn; all the while check by feel the temperature of air com-
ing out of the branch pipes of the manifold in the blister.

5. Check the wing de-icer system as follows:

[redacted]

50X1-HUM

(a) turn the de-icer slide valve on the shut-off valve control panel to the left by 90°;

(b) by means of the ТЦТ-13 thermometer indicators check whether the air stream comes to the wing noses; the temperature must increase to + 100°C and higher as shown by the indicators. The temperature exceeding + 100°C by the indicators, close the shut-off valves on the engines.

CAUTION: 1. Open the wing de-icer shut-off valves for not more than one or two minutes. It is strictly prohibited to open the valves for a longer period of time as prolonged hot air delivery causes burning of the protective coating in the wing noses and corrugation of the wing nose skin.

2. With the engines running when the system is not checked, see that the shut-off valve control slide valve is in the CLOSED position at all times and that the ТЦТ-13 thermometer on the right pilot's instrument board does not indicate temperature increase.

6. FAULTS OF PRESSURIZED COCKPITS AND ALTITUDE EQUIPMENT SYSTEMS ENCOUNTERED DURING SERVICE

Nos	Fault	Cause	Remedy
1	2	3	4
	HATCH PRESSURIZATION AND SHUT-OFF VALVE CONTROL SYSTEMS		
1	The cockpit fails to get pressurized. There is no pressure in the sealing hoses of the hatch covers	1. Air leakage in the connections of the hatch pressurization system pipe lines	1. By means of soapy water determine leaky connections and tighten them up
		2. Damage to the hatch sealing hoses	2. Remove the damaged hose and repair or replace it
		3. Air leakage through the reducer packing gland	3. Remove the reducer and replace its packing gland
		4. Jamming due to corroded reducer valve	4. Remove the reducer and eliminate the valve defect by means of emery cloth or replace the reducer
		5. Air leakage from the sealing hose because the rod of the two-way cock pressurization valve is pressed by the pressure releasing lever	5. Adjust the clearance (1.5 - 2 mm) between the lever of the pressure release mechanism and the valve rod by screwing the entrance hatch stop in or out (See Fig. 117, Ref. No. 21) or by filing the lever lug
		6. Air leakage from the sealing hose due to jamming at low temperatures or due to corrosion of the rod in the valve guide	Remove and disassemble the valve. Wash the valve parts with gasoline, grade B-70, then wipe them and, if necessary, remove traces of corrosion on the rod by means of emery cloth. After the cock has been assembled, check its valve for smooth movement
		7. No air pressure is built up in the sealing hose due to wedging of the cock valve caused by freezing or corrosion	7. Check the cock for leakage. No leakage of air delivered through the cock side pipe union at pressures of 0.2, 2, and 5 kg/sq.cm. is permitted. The cock valve must open at air delivery through the upper pipe union at a pressure of $1^{+0.2}$ kg/sq.cm.
2	The system shut-off valves fail to open	1. There is no pressure in the pipe lines of the valve control system due to air leakage in the pipe connections	1. Check the pipe connections for leakage by means of soapy water and tighten up the connections till the fault is eliminated
		2. Wedging of the shut-off valve rods due to freezing, scores or corrosion (See Fig. 118, Ref. Nos 16 and 20)	2. Remove and disassemble the valve. Clean the corroded and scored rods with emery cloth, then wash the valve parts with gasoline, grade B-70, and wipe them. The valve assembled, check it for smooth movement and spherical valve 21 (See Fig. 118) for leakage at a pressure of 6 kg/sq.cm. The time during which pressure in the tank (15 lit. capacity) drops from 6 to 5 kg/sq.cm. must be not less than 5 min. At air pressure of 6 kg/sq.cm. before the spherical valve, open it with air delivered to rubber diaphragm 15 via pipe union 22 at a pressure of 4 kg/sq.cm. On opening the valve a pop should be heard. The

[redacted]

1	2	3	4
			check over, mount the valve in position
		3. The diaphragm of shut-off valve L7601-495 is torn (See Fig. 118 A, Ref. No. 15)	3. Remove and disassemble the valve and replace its rubber diaphragm. After the valve has been assembled, check the valve recess above the diaphragm for leakage under pressure (4 kg/sq.cm.) of air delivered through pipe union 22 (See Fig. 118). Under this pressure applied for not less than 10 min. the recess must be gastight
3	Pressure downstream of the reducer does not correspond to the rated value	The reducer is not properly calibrated	Calibrate the reducer. In case it is impossible, replace the reducer

Note: After the replacement or checking of separate units on the test stand check the gastightness of the entire system under a pressure of 4 kg/sq.cm. The time during which pressure in the system decreases from 4 to 2 kg/sq.cm is indicative of the system gastightness; it must be not less than 15 min.

COCKPIT PRESSURIZATION SYSTEM

1	2	3	4
1	From an altitude of 1800 to 2200 m. no surplus pressure is created in the cockpit	1. Premature opening of the ККП valve, leakage in its control valve or in the emergency pressure release valve	1. If during the flight after pulling out the control valve more than once and pressing the emergency pressure release valve, the fault persists, check the valves for leakage after the flight. If the valves are leaky, remove them, disassemble, grind them to fit the seats and then test them for tightness and proper calibration on a special stand. In case the stand is not available, replace the defective valves
		2. Leakage in the pipe lines connected to ККП valve	2. Tighten up the leaky pipe line connections or replace the damaged pipe. This done, test the entire system for leakage
		3. Failure (tear) of the ККП valve diaphragm or the control valve diaphragm	3. Remove the valve, disassemble and replace the damaged diaphragm. This done, test the valve for leakage and check its calibration on a special stand. If the stand is not available, replace the valve
		4. Jamming at minus temperatures or caused by scores and corrosion of the ККП valve movable parts and of the control valve	4. Remove and disassemble the valve; clean the places affected by corrosion and scores. This done, wash the valve parts with gasoline, grade Б-70, wipe them and cover the movable parts with lubricant, grade ЦИАТИМ-201. The valve assembled, check it for smooth movement, leakage, effort required to open the valve, and proper calibration using a special stand. If the stand is not available, replace the valve

Notes: 1. Defective ККП valves and their defective control valves are replaced in sets only, as these units are calibrated on the stand simultaneously.
2. Methods of checking the ККП valve and its control valve for leakage, effort required for opening the valve and calibration are described below.

		5. Clogging of the calibrating hole of the АРД-54 regulator connecting the control unit and the cockpit	5. Remove the regulator, scavenge it with air and check it in the pressure chamber. If the fault persists, replace the regulator
2	Change in surplus pressure in the cockpit according to altitudes fails to correspond to the schedule. The defect is determined by the УВПД-15 altitude and pressure differential gauge, with the three-way АРД-54 regulator in the correct position both at the normal and combat ratings	1. Leakage in the connections of the АРД-54 regulator pipes connecting the control unit and the damper to the atmosphere	1. Tighten up yokes and nuts in the connections of the pipes
		2. Leakage of the АРД-54 regulator valve	2. Remove the regulator and plug the pipe union of its damper. Build up a pressure of 0.3 kg/sq. cm. in the regulator by delivering dry air to it through the pipe union of the three-way cock. If at this pressure

[redacted]

50X1-HUM

1	2	3	4
		3. Leakage in the valve of the АРД-54 regulator	the valve is leaky, replace it 3. Remove the regulator and check it in the pressure chamber having plugged the pipe union connecting the damper to the atmosphere. If during the test pressure in the pressure chamber changes according to altitudes in compliance with the schedule, the valve should be replaced. If the pressure chamber is not available, replace the regulator
3	Unstable operation of the АРД-54 regulator at one and the same altitude both at the normal and combat ratings	1. The regulator is misadjusted 2. Leakage in the body of the regulator solenoid 3. Premature cutting in of the ККП valve because the valve is misadjusted in relation to the АРД-54 regulator	1. Replace the АРД-54 regulator 2. Replace the АРД-54 regulator 3. Remove the АРД-54 regulator and the ККП valve together with its control valve to check it on the stand or in the pressure chamber. If the adjustable parameters of both the valve and the regulator coincide, readjust the ККП valve to increase pressure drop keeping within the range of 0.43 – 0.46 kg/sq.cm. so that the new value of pressure drop does not differ from the maximum drop maintained by the АРД-54 regulator by more than 0.01 - 0.02 kg/sq.cm. In case the stand and the pressure chamber are not available, replace the ККП valve set or the АРД-54 regulator
4	At altitudes from 0 to 1800 - 2200 m. the surplus pressure exceeds 30 mm of mercury (0.04 kg/sq.cm.)	1. Loss of vacuum in the silphon of the АРД-54 regulator control unit 2. Damaged (torn) diaphragm of the pressure	1. Replace the regulator 2. Replace the regulator

1	2	3	4
		release valve of the АРД-54 regulator	
5	Combat rating fails to get cut in	1. Poor contact or break in the supply circuit of the АРД-54 regulator solenoid 2. Inter-turn short circuit of the АРД-54 regulator supply circuit 3. Jamming of the АРД-54 regulator solenoid armature	1. Ring out the regulator solenoid supply circuit and determine the place of break 2. Ring out the solenoid supply circuit and on detecting short circuit replace the defective regulator 3. Replace the regulator
6	The cockpit fails to get pressurized	1. Leakage in the riveted seams of the cockpit skin 2. Separation of thiokol packing or butvar over the glass edging 3. Wear of the cable packing gland 4. Leakage in the plug connectors 5. Leakage in the through pipe unions of the pipe lines	Test the cockpit for air leakage so as to detect leaky places

UNITS REGULATING COCKPIT TEMPERATURE AND PRESSURE

1	2	3	4
1	Air temperature in the cockpits cannot be regulated. When changing over the 2НПП-45 switches on the right pilot's instrument board or on the gunner-radio operator's panel to the COLD position, only hot air continues to come into the cockpit and vice versa	1. Jamming of the supply valve shutter, due to wear or damage to its axle or broken teeth of the drive quadrant 2. Failure of the МРТ-1 electric motor of the shutter caused by poor contact in the plug connectors or by breakage of the wiring 3. Failure of the МРТ-1 electric motor	1. Remove and disassemble the valve. If it is impossible to eliminate the fault, replace the defective valve 2. Ring out the wiring, clean the contacts and restore the electric motor supply circuit 3. Replace the faulty electric motor
2	Air temperature in the cockpits cannot be regulated automatically when the 2НПП-45 switches are set in the AUTOMATIC position	1. Poor contact in the plug connector of the ТРТВК-45М thermostat or disconnection of its supply circuit 2. Failure of the ТРТВК-45М thermostat	1. Ring out the wiring, clean the contacts of the plug connectors and restore the supply circuit 2. Replace the faulty thermostat

[redacted]

50X1-HUM

1	2	3	4
3	Considerable air leakage through the packing gland of the supply valve shutter axle	Wear of the shutter axle packing gland	Replace the defectin packing gland, when assembling the shutter apply grap ite lubricant to its axle
	Pressurization Reducing Valve (PKH)		
1	On shifting the shutter of the supply valve to the HOT position by the UPT-1 electric motor air fails to come into the cockpit	1. Wedging caused by freezing (at low temperatures of free air) or by corrosion of the plug cock of the valve. Clogging of the valve jet for the same reasons 2. Tear of the valve diaphragm	1. Replace the valve 2. Replace the valve
2	Intensive flow of hot air under increased pressure into the cockpit	Failure of the valve sylphon, the valve does not react to air pressure increase in its outlet	Replace the valve
3	Insufficient air delivery to the cockpit	Soiling of the filter	Remove the filter and wash it in clean gasoline, grade B-70. After washing dry the filter
	Turbo-Cooler (TXY)		
1	The turbo-cooler fails to decrease the temperature of air delivered to the cockpit and does not reduce its pressure to 1 kg/sq.cm.	Damage to the bearings and failure of the turbine	Replace the faulty unit
2	Intensive flow of cold air into the cockpit	Improper control of the air stream from the engines due to damaged diaphragm of the flow restrictor mechanism or that of the air expansion regulator	Replace the faulty unit
3	Oil spurting through the turbine packing gland	Damage to the turbine packing gland	Replace the faulty unit
	Air Delivery Regulator (PHB)		
1	When operating the regulator lever air delivery checked by the PBY-46y flow meter does not change	1. Break of the control cable 2. Wedging of the regulator butterfly valve	1. Replace the broken cable or the entire line 2. Repair or replace the defective regulator
2	With the regulator closed, the PBY-46y flow meter indicates air flow in the cockpit pressurization system	Displacement of the ball securing the control cable in position on the sheave	Place the ball into the seat and cotter it

1	2	3	4
3	Spontaneous opening or closing of the regulator in flight	Loosening caused by vibrations of the regulator lever locking device	Remove the cotter pins and tighten up the lever axle nut compressing the spring washers

Note: The defects affecting the mounting of the butterfly valve and adjustment of cables can be eliminated without removing the regulator. The tension of the cables controlling the butterfly valve is adjusted so that on bringing the control lever forward the handwheel of the butterfly valve axle rotates counter-clockwise (as viewed from the regulator axle end face) and on bringing the lever backward it rotates clockwise. The tension of the cables must ensure:

(a) complete opening and closing of the butterfly valve;

(b) with the butterfly valve in the extreme positions, the lever must not reach the end of the control panel slot;

(c) pressure applied to the lever must not exceed 3 kg.

1	2	3	4
	Air Flow Meter (PBY-46Y)		
1	With air delivered to the cockpit, the flow meter pointer moves to the left (counter-clockwise)	1. Dents, cracks and other damage detected on the Venturi tube 2. Leakage in the pipe lines running from the Venturi tube to the indicator or to the flow meter body 3. Clogging of the flow meter static or total-pressure pipe lines 4. Clogging of the holes in the pipe unions of the Venturi tube 5. Failure of the aneroid or of the indicator transmission link	1. Remove the tube and dress it or replace by a new one 2. Check the pipe line connections for leakage and the pipe lines for proper connection with the instrument 3. Disconnect the pipe line connecting the transmitter and the indicator and scavenge it with compressed air 4. Clean and scavenge the holes in the pipe unions 5. Replace the faulty indicator
	WING DE-ICER SYSTEMS		
1	The system shut-off valves fail to open	See the shut-off valves of the hatch pressurization system above	See the shut-off valves of the hatch pressurization system above
2	With the wing nose heater system switched on, the TUT-13 thermostat indicator does not react to temperature changes	1. Break in the connecting wires or thermocouples supply circuit 2. The ends of the thermocouple or those	1. Using a probe check the supply circuit and connecting wires to detect damage. 2. Check the ends of the thermocouple and wires

[redacted]

50X1-HUM

1	2	3	4
		of the connecting wires are shorted 3. The thermometer indicator is faulty	3. Replace the defective indicator
3	The pointers of the ТЦТ-13 thermometer indicators move to the left from zero when air temperature in the thermometer transmitter zone is positive and exceeds the ambient air temperature	Wrong polarity in the connection of wires to the thermocouples or in the plug connector	Check the connection of wires to the thermocouples and in the plug connector by current polarity and resolder their ends, if necessary
4	The pointer of the ТЦТ-13 thermometer indicator moves with jerks or the indicator reads low	Poor contact in places where the wires are connected to the thermocouples or in the plug connector	Clean or resolder the defective contacts
		Pressurized Cockpits	
1	Air leakage through the glass of the cockpit canopy	1. Glass attachment bolts are loose 2. Thiokol putty comes off 3. Rubber gaskets show from under the glass	1. Tighten up the bolts with calibrated wrenches 2. Apply thiokol putty to places where it has come off 3. Reassemble the glass attachment, place new rubber gaskets When replacing the gaskets, fit each glass attachment bolt in its place
2	Air leakage through the rubber flanges (B0600-88) sealing the hoses which feed the tail cannon mount	Damage to the rubber sealing flanges	Replace the old flanges
3	Air leakage through the rubber packing of the hatches and sliding panels located on frame No. 12 and in fuselage compartment Ф-6	Cracks and wear of the packing rubber	Replace the old packing rubber. Glue new rubber with cement No. 88
4	Air leakage through the joints of fuselage compartments Ф-1 and Ф-2	Loosening of clamp bolts	Tighten up the bolts by means of a torque indicating wrench
5	Air leakage through the fairleads of the cable line located on the bottom of frames Nos 12 and 69	Wear of the rubber inserts of the fairleads	Tighten up the covers of the fairleads. If after the tightening of the cover air leakage persists, replace the inserts
6	Air leakage through the pressure seal of the attachment fork of the entrance hatch in fuselage compartment Ф-6	Wear of the sealing rubber washer	Remove the entrance hatch door, dismantle its skin to obtain access to the fork nut and place a new washer under the fork
7	Air leakage through the pressurization valve of the entrance hatch in fuselage compartment Ф-6	Deterioration of the sealing rubber cap (H7610-56)	Remove the valve from the aircraft. Drill out the rivets and remove the cap; fit a new cap riveting it with АН РМ rivets and then fit the valve in position. If a spare rubber cap is not available, replace the defective valve
8	Air leakage through the entrance hatch doors and emergency escape hatch doors	No pressure in the sealing hoses	Build up pressure in the hoses to detect leaky places
9	Air leakage through the riveted seams of the cockpit skin	Loosening of the riveted seams	Tighten up the rivets of the seams
10	Air leakage through the АРД-54 automatic pressure regulator	The АРД-54 regulator attachment yoke is overtightened	Loosen the yoke so that the bolt torque does not exceed 10 kg-cm, as indicated by the torque indicating wrench

7. TESTING FRONT AND REAR PRESSURIZED COCKPITS FOR LEAKAGE

CAUTION: When testing the cockpits for leakage observe the following precautionary measures:

1. The testing panel must have a protective barrier.
2. Blisters and pilots' and navigator's canopy glass should be provided with protective gauzes.
3. Hatch covers, canopy sliding panels and covers may be opened only after surplus pressure has been released from the cockpit.

Prior to testing the cockpit proceed as follows:

1. Disconnect the static-pressure pipe line from the УВПД-3 (or УВПД-15) altitude and pressure differential gauges located on the right pilot's instrument board and on the gunner-radio operator's panel. Plug the instrument connections and disconnected ends of the pipes.

2. Remove the following instruments and units:
- all the oxygen breathing apparatus, type КП-24;
- all the pressure gauges, type М-1000;
- СПУ-10 interphone communication amplifiers in the front cockpit;
- inverters of the РСБ-70 station and the У-600 amplifier in the front and rear cockpits;

[redacted]

– altitude and speed units from the ПСП-48 (or ПСП-58) instrument set in the front and rear cockpits;

– panels А-2 (mounted on some of the aircraft) in the front and rear pressurized cockpits.

Then plug the holes connecting the above-mentioned instruments and units with the atmosphere.

3. Set the three-way cock of the АРД-54 automatic pressure regulator to the CLOSED position.

4. Set the knobs of the control valves, included in the ККП valve sets (H7601-240), on the right pilot's and radio operator's panels for pressure drop of 0.4 kg/sq.cm.

5. Pull up the cockpit emergency pressure release valve button located on the left pilot's panel and near the gunner-radio operator's seat as far as it will go.

6. Plug the container heater pipe line of fire-fighting cylinders H6600-209/21 on the bottom of frame No. 12 on the aircraft where this pipe line is connected to the bottom of this frame.

7. Retain the shutters of the ККП pressure combination valves located on the bottom of frames Nos 12 and 69 in the open position with special supports.

8. Close the HATCH PRESSURIZATION cock mounted on the right pilot's pressurization panel.

9. Close the air delivery regulator.

10. Close the air intake delivering atmospheric air to the front cockpit at low altitudes and the rear cockpit ventilation cock.

11. Remove the plugs from the pipe unions delivering air for the leakage test and from the pipe unions used to measure pressure in the cockpits (the pipe unions are located on the bottoms of frames Nos 12 and 69) and then connect them to the hoses from the test stand with the low-pressure compressor and pressure gauges (Fig. 125).

The test stand hoses are connected to the cockpits as follows:

(a) to the front cockpit pipe unions – through the hatch in the floor of fuselage compartment Ф-3 , through the hatch at the landing gear nose leg or through the inspection hatch located on the fuselage starboard side between frames Nos 12 and 13;

(b) to the rear cockpit pipe unions – through the hatch of technical compartment Ф-5.

12. Connect the hatch pressurization system to the compressed air bottle at a pressure of 4 kg/sq. cm. The hose from the ground compressed air bottle used for hatch pressurization is connected through the reducer for 4 kg/sq. cm. to the following pipe unions:

(a) in the front cockpit to the through pipe union mounted on frame No. 12 (from which pipe No. 58-1 must be previously disconnected) or to the through pipe union located at frame No. 62a (having previously disconnected pipe No. 58-11 from it);

(b) in the rear cockpit to the through pipe union located at frame No. 62a having previously disconnected pipe No. 58-10 from it.

13. Close and fix in position the pilots' canopy sliding panels, the cover of the hatch on frame No. 12 and the covers of the entrance and the emergency escape hatches in compartments Ф-2 and Ф-6.

14. Pressurize the entrance and emergency escape hatches and the pilots' canopy covers delivering compressed air to the sealing hoses from the ground air bottle. Deliver air through reducer 12 until a pressure of $4^{+0.3}$ kg/sq. cm. is built up in the system checking pressure downstream of the reducer and in the pipe lines by pressure gauges 13 and 15 (See Fig. 125).

If during the test a person is present in the front cockpit and the aircraft air system is under pressure, pressure in the sealing hoses can be built up by opening the cock on the pressurization panel, with the entrance hatch doors in both cockpits closed.

The procedure of testing the cockpits for leakage is as follows:

1. Start the low-pressure compressor(КНД-1 or any other type).

2. Open air supply cocks 1 and 7 on the test stand; pressure release cock 6 should be closed. Slowly, at a rate not exceeding 5 m/sec. as indicated by the climb-and-descent indicator of the stand, bring air pressure in the cockpit to 0.1 kg/sq. cm. checking it against pressure gauges 9 and 10 of the stand.

3. Carry out a thorough examination of the cockpit which is under a pressure of 0.1 kg/ sq. cm. Mark the places where leakage of air from the cockpit is detected so as to eliminate the defects after pressure is released from the cockpit.

If on supplying air to the cockpit the pressure gauges checking pressure in the cockpit do not indicate pressure, stop pressurization, release pressure from the cockpit and resume the test after the fault is remedied.

Places of air leakage are detected both from the outside and from the inside of the cockpit with surplus pressure in the cockpit not exceeding 0.1 kg/sq. cm. It is recommended to detect leaky places by listening using a rubber pipe, one end of the pipe should be put to the inspector's ear, while its other end – to the glass, sealings, bolted connections and riveted seams.

When during the test the men are in the cockpit they must check the readings of the instruments measuring the static and total pressure. The deflection of these instruments pointers at surplus pressure in the cockpit testifies to the leakage of the instruments or pipes.

Only one cockpit can be tested for leakage from one stand at a time. In winter prior to leakage test the cockpit should be warmed up with warm air from the ground heaters to a temperature of + 15 to 25°C. In summer it is not permitted to test the cockpit for leakage when it is sunlit and when the free air temperature exceeds + 25°C.

4. By slowly increasing air supply to the cockpit bring its pressure to 0.4 kg/sq. cm. This done, close stand cock 7 (See Fig. 125) and measure the time of pressure drop in the cockpit from 0.4 to 0.1 kg/sq. cm.

Cockpit gastightness is considered to be satisfactory if this time is not less than 12 minutes for the front cockpit and 6 minutes for the rear cockpit.

If the time of pressure drop in the cockpit is less than the above values, release air from the cockpit, increase cockpit pressurization in places where air leakage is detected and then retest it for leakage.

8. LEAKAGE TEST AND CALIBRATION OF ККП VALVE TOGETHER WITH ITS CONTROL VALVE

After the faults have been eliminated, test the ККП valve together with its control valve for leakage, determine the force required to open the valve and then calibrate it on the stand together with its control valve.

[redacted]

The gastightness of the valve set is checked under surplus pressure of 140 mm
of mercury (about 0.2 kg/sq.cm.) of air delivered to the KKU valve and to the cont-
rol valve. Both valves of the set are considered to be gastight if in the course of
5 minutes pressure drop in them does not exceed 10 mm of mercury. The force requir-
ed to open the KKU valve is determined at surplus air pressure of 37 to 85 mm of
mercury (depending on the free air temperature) acting upon its diaphragm.

The test stand (Fig. 126) on which the KKU valve and its control valve are
calibrated is provided with:

- sealed reservoir with a capacity of 5 cu. m. ;
- air flow meter (Venturi tube B7607-62 and PBY-46y flow meter indicator);
- two reference pressure gauges (mercury and mechanical);
- low-pressure compressor, type KHH-1 (or of another type), with an output
of up to 500 cu. m/hr;
- connecting pipe lines.

Calibration of the valve set includes:

- manual adjustment of pressure in the reservoir by means of the valves;
- maintenance of constant (maximum) pressure drop in the reservoir;
- checking emergency pressure drop in the reservoir.

To calibrate the valves:

1. Mount both valves on the test stand and connect them by pipe lines.
2. Close the sealed reservoir and connect the hose from the compressor to it.
3. By rotating the control valve knob clockwise set it in the zero position.
4. Deliver compressed air from the compressor to the stand reservoir at air
consumption of 250 to 500 cu. m/hr and build up in it a pressure of not more than
0.1 kg/sq.cm.as indicated by the pressure gauges (mercury or mechanical).
5. By rotating the control valve knob counter-clockwise adjust pressure drop
in the reservoir to 0.2, 0.3, 0.4, and $0.43^{+0.03}$ kg/sq.cm.
6. Check the stability of valve operation for 2 or 5 minutes throughout the
entire delivery range and at all pressure drops (See Item 5).

The valve operation is considered to be satisfactory if pressure variations
in the reservoir do not exceed ± 8 mm of mercury during 2 seconds at least.

The KKU valve is adjusted by turning the adjusting screw in or out.

7. At pressure drops of 0.2 , 0.3, and 0.43 kg/sq.cm. check pressure drop in
the reservoir with air delivery shut off. This being the case, pressure in the
reservoir drops sharply, but this drop should not exceed 60 mm of mercury.
8. Check the operation of the KKU valve acting as a safety valve. For this
set the knob of its control valve to the maximum pressure drop position and make
sure that pressure in the stand reservoir does not exceed $0.43^{+0.03}$ kg/sq. cm.
at any air consumption within 250 - 500 cu. m /hr.
9. Check the operation of the control valve at emergency pressure release in
the following manner:
   (a) adjust pressure in the reservoir to 0.4 kg/sq.cm. (294 mm of mercury);
   (b) stop compressed air delivery to the reservoir;
   (c) pull up the control valve red button as far as it will go;
   (d) measure the time of pressure drop in the reservoir from 0.4 kg/sq. cm.
to zero. With the valve operating properly, this time should not exceed 6 to 9
seconds and the residual pressure in the reservoir should not exceed 20 mm of mer-
cury. In case the time of pressure drop exceeds 6 to 9 seconds, it is necessary to
slightly loosen the adjusting screw of the KKU valve; when doing so adhere to the
instructions given in Item 6 concerning the stability of valve operation.

After the stability of valve operation has been obtained in compliance with the

Specifications, lock the adjusting screw with wire, type KOK-0,8, and screw the
emergency pressure release head as far as it will go and lock it with a pin. Drill
a new hole for the pin, if necessary.

After locking it is advisable to retest the valves as prescribed in Items 1
to 9.

After the cockpits have been tested for leakage:

1. Release the remaining pressure from the cockpit through cock 6.
2. Disconnect the stand hoses from the cockpit bottom and plug the pipe unions
in the bottom; lock and seal the plugs.
3. Release pressure from the sealing chambers of the entrance hatches (prior
to opening the entrance hatch doors):
   (a) in the front cockpit - through the pressure release pipe union on the
bottom of frame No. 12.

Pressure released, fit the pipe union plug in position, lock and seal it;

   (b) in the rear cockpit - through the pipe union in the starboard recess
of the ammunition belt feed mechanism.

For this remove the cover of the ammunition belt feed mechanism recess,
disconnect from the through pipe union pipe line 47-5 running to the side pipe
union of the two-way air valve located in the recess.

After pressure has been released, connect pipe line 47-5 to the through
pipe union, lock and seal the connection.

<u>Note:</u> On aircraft of earlier make which are not provided with pipe unions
for pressure release from the sealing chamber of entrance hatch
0-2 open the hatch carefully with the aid of two or three men.

4. Mount the removed instruments in position and connect the lines. Remove
shop plugs and supports.

[redacted]

Chapter VIII

PACKING AND SHIPMENT OF SEPARATE AIRCRAFT UNITS

1. GENERAL

During service separate aircraft units are to be transported to repair shops or units. The condition of the units to be transported depends on the quality of dismantling and corrosion-preventive treatment of the unit, the quality of packing, as well as on the organization of loading operations in points of delivery and destination.

Mind that the dimensions of the first and the second detachable parts of the wing taken separately do not fit into the overall dimensions and the shape of cargo for the rolling stock (Fig.127). Therefore, when shipped by railway the first detachable part of the wing is packed without the noses, landing gear fairing, engine nacelle, air intake, and flap, while the second detachable part of the wing is packed without the noses, aileron, and flap. Figs 127 through 134 show overall dimensions and the shape of packing of aircraft main units for their transportation by railway. Aircraft units to be transported should be processed so as to ensure their proper condition during shipment and short-term storage. Packing for aircraft units protects them against the elements and mechanical damage. The way the units are packed is of great importance especially when the units are to be turned over during packing.

When carrying out loading operations, take into consideration the fact that the stress-carrying elements of packing are the lower longitudinal bars and those of containers are the floor and the lifting eyes.

When shipping aircraft units by railway, by truck or by special sledge drawn by a tractor, take particular care to see that they are securely attached to the flat car, car or sledge to prevent the load from being displaced or turned over.

Table 16 gives a list of aircraft units which can be shipped, types of packing, approximate weights and overall dimensions of packed units. Using this Table as a guide, choose cranes for loading operations.

To transport all the units of the aircraft structure by railway, it is necessary to have ten two-axle and three four-axle flat cars.

To transport separate aircraft units, choose the amount of rolling stock making use of the overall dimensions given in Table 16.

Tab 50X1-HUM

List

of Aircraft Units which Can Be Shipped.

Packing, Overall Dimensions and Approximate Weights

of Packed Units

№	Aircraft unit	Number of units on aircraft	Number of units in packing	Type of packing	Overall dimensions of packing, mm	Weight of one unit, kg	Gross weight of unit in packing, kg
1	2	3	4	5	6	7	8
1	Front pressurized cockpit	1	1	Carcass	2500x2750x6100	3150	4000
2	Fuselage nose section	1	1	Carcass	2700x3000x6300	670	1500
3	Fuselage tail section	1	1	Carcass	2750x3150x20100	4350	7500
4	Rear pressurized cockpit	1	1	Carcass	2250x3100x4000	1730	2300
5	First detachable wing part without noses, landing gear main leg fairing, flap and engine nacelle	2	1	Carcass	1800x2900x8000	2400	5300
6	First detachable nose of first detachable wing part	2	2	Box	1000x800x1400	6	80
7	Second detachable nose of first detachable wing part	2	2	Box	1000x1100x5550	87	625
8	Landing gear main leg fairing	2	1	Carcass	1500x1600x6000	200	450
9	Flap of wing first detachable part	2	2	Container with detachable panels	1130x1930x3520	50	250
10	Second detachable wing part without flap and aileron noses	2	2	Carcass	2100x3650x13900	1650	5000
11	First detachable nose of second detachable wing part	2	2	Box	710x860x6730	80	600
12	Second detachable nose of second detachable wing part	2	2	Box	540x730x5530	50	350
13	Aileron	2	2	Carcass	830x1770x6550	100	600
14	Flap of second detachable wing part	2	2	Container with detachable panels	1150x2130x7500	96	350

[redacted]

1	2	3	4	5	6	7	8
15	Stabiliser	2	2	Carcass	1650x2700x9500	400	2300
16	Fin	1	1	Carcass	800x3200x7000	350	1000
17	Rudder	1	1	Carcass	600x1800x5700	106	375
18	Elevator	2	2	Carcass	800x1320x7100	70	575
19	Engine nacelle	2	2	Carcass	1880x2000x5500	275	450
20	Air intake front part	2	2	Carcass	1800x1800x2800	90	500
21	Landing gear main leg strut	2	2	Carcass	1000x1340x2700	500	1500
22	Landing gear main leg bogey with wheels	2	1	Carcass	1200x1200x2400	1100	1350
23	Landing gear nose leg with wheels	1	1	Carcass	1000x1050x2680	400	800
24	Duct and lower part of engine nacelle	2	2	Carcass	1900x2400x5540	140.75	875
25	Rear adapter of engine nacelle	2	2	Carcass	1250x1280x430	25	225

2.PREPARATION OF UNITS FOR PACKING

Each aircraft unit to be packed must be completed with all parts and processed.

The availability of all parts belonging to the unit is checked against the Reference List or the Packing List. In doing so check whether the unit is free from mechanical damage, corrosion and damage to varnish coatings. Then the unit should be processed. A correctly processed unit can be stored during one year under proper conditions.

Prior to packing, clean the skin of large units and the surfaces coated with varnish and paint from dust and dirt with dry pieces of cloth or with hair brushes; large units are not subjected to special processing.

The outer surfaces of the unit parts of aluminum alloys, copper, brass, bronze, oxidized ferrous metals and metals with cadmium, zinc, nickel or chrome coatings should be processed.

The surfaces to be processed must be previously cleaned thoroughly from dust and dirt. To clean metal surfaces, use gasoline, grade B-70, without antiknock component. Clean such surfaces by wiping them with pieces of cloth or hair brushes soaked in gasoline. This done, dry the cleaned surface at ambient air temperature for 10 or 20 minutes or blow it with dry compressed air. Oxidized parts or parts of ferrous metals should be processed with gun grease. The surfaces of parts of aluminum alloys, copper, brass, bronze and the surfaces having cadmium, zinc, nickel or chrome coating should be processed with dehydrated petrolatum. Gun grease and petrolatum are applied to the surface with a hair brush or a sprayer. If necessary (at low air temperature), it is permitted to dilute dehydrated petrolatum and gun grease with spindle oil No.2 or No.3 in the following volumetric formula: dehydrated petrolatum - 70 per cent, oil or gasoline, grade B-70, without antiknock component - 30 per cent. The mixture should be made of required viscosity or warmed up to a temperature of 110 or 120°C.

The viscosity of gun grease diluted with gasoline or of dehydrated petrolatum as indicated by the viscosimeter, type ВЗ-36 (nozzle No.2), must be as follows: for the brush - 15 or 20 seconds, for the sprayer - 8 or 12 seconds. After processing the metal assemblies of the units should be wrapped in paraffined pa

per, all the holes in parts and assemblies communicating the inner recesses with the atmosphere should be closed with plugs, rubber caps or tied up with several layers of cloth. The oxygen system pipe lines must be plugged; their processing with lubricants is strictly prohibited. The surfaces of organic glass are protected from mechanical damage either by covering them with a layer of gelatine glue consisting of 100 gravimetric parts of gelatine, 40 gravimetric parts of glycerine and 250 or 300 gravimetric parts of water, or by cementing paper to the glass.

All the materials used for processing must comply with State Standard ГОСТ. Besides this, lubricants and chemical agents must be accompanied by the laboratory Certificate concerning their condition and stating whether they comply with the Specifications. The date of preparation of lubricants and chemical agents should be also put down in the Certificate, so that they should be used not later than in one day after they are prepared.

Lubricants which have been used once can be used again for processing purposes after being filtered, a processed unit completed with all the parts and provided with the documents is packed in a special carcass packing, a container or a box.

3. PACKING MEANS

To pack separate aircraft units the following packing means are employed:

- carcass packing (the unit to be packed is protected with a cover);
- containers;
- boxes.

A carcass packing has a horizontal frame of longitudinal bars connected to one another by cross-beams. Fixed to the frame are supports covered with felt. The support ends are provided with uprights supported by braces. Secured to the upright are retaining supports and eye bolts for the bracing wire ropes by means of which the packed unit is fastened to the truck body, flat car or sledge. On the top the packed unit is covered with tarpaulin which is fastened to the horizontal frame by means of planks and nails. The overall dimensions of the unit packed in the carcass packing are almost not increased, the unit is securely fastened and may be stored in this condition for a short time.

The container is a sectional structure consisting of separate shields connected by bolts. The container floor is a wooden frame covered with boards and moisture-proof paper. The container walls consist of bars and are covered with veneer sheets from the inside and with moisture-proof paper. The container top is a wooden frame covered with boards and protected with ruberoid or tar paper from the outside. The top is slightly inclined for draining water. Fastened to the container floor is one or several supports covered with felt. The unit to be packed is first securely fastened to the floor supports after which the container side and end face walls are mounted. If necessary, additional retaining supports or bars are mounted, and then after checking the unit for secure attachment the container top is mounted and fixed with bolts. An assembled container has special lifting eyes and transverse members to be lifted by means of a crane. The container somewhat increases the overall dimensions of the unit to be packed, therefore, it is not used for packing large-size units. The container has the following advantages: simplicity of packing, reliability of attachment, convenience of shipment and longer storage period as compared with the carcass packing.

Boxes are designed for packing units of comparatively small overall dimensions and weight (e.g. the noses of the first and second detachable wing parts) and are manufactured of six lattice board shields covered from the inside with

4-mm veneer. Table 17 gives the sections of boards used for boxes and the spaces between them depending on the box length.

Table 17

Sections of Boards and Gaps between Them

Box length, mm	Board section, mm	Spaces between boards, mm
Up to 1500	20x50(x70)	50 - 70
1500 - 2500	20x80(x100)	80 - 90
Over 2500	20x100(x120)	80 - 100

Five shields of the box without the cover are connected to one another by means of nails and are covered from the inside with water-proof paper fixed in position by means of veneer planks, 4x25. After the unit has been packed in the box and secured there, the cover also protected with water-proof paper from the inside should be fastened with nails.

4. MANUFACTURE OF PACKING

To manufacture the packing, use wood meeting the requirements of second-grade saw-timber and birch veneer. Saw-timber used for packing should be stored at depots, should be free from mould and through cracks. The humidity of boards and bars should not exceed 20 or 30 per cent. The wood must be sawn correctly; wood finishing defects should not affect more than 200 mm per one meter of bar length.

To cover the supports, use commercial felt with humidity not exceeding 8 per cent of weight without the smell of rot.

Use roofing felt or tar paper for insulating purposes.

Roofing felt used for covering the containers from the outside should meet the Specifications.

Used as packing materials are: wadding, felt or alignin.

The packing materials must be dry and clean.

Steel, grades 2 and 3, is used for welded parts and lifting eyes of the container; steel, grade 10, is used for strips and other metal binding.

Requirements for Packing

1. Packing must be manufactured in strict compliance with the drawings and Specifications.
2. Manufactured parts of packing must be stored under the shed.
3. The main bars are bound with a straight joint lock.

The joints of the floor, wall and top boards must be positioned so that in one cross-section they are arranged not less than in every two boards; the joints must be located on cross-beams. The boards used for manufacture of containers and boxes should be shaped from the outside.

4. The supports must be thoroughly covered with commercial felt and sack cloth. Prior to covering the supports with sack cloth, the commercial felt shall be fixed with nails.

5. Veneer sheets on the walls are secured with nails to the frame along all the bars and braces; the nail pitch over the sheet edges does not exceed 150 mm; in other seams the nail pitch should not exceed 250 mm. The sheet jo [redacted] 50X1-HUM have an over a lop of 50 to 60 mm..

6. The seams of roofing felt on the top must run along its slope with an overlap of 100 mm. The edges of the outer covering are fastened in position by means of planks on the inside so as not to prevent water from running down. Use of roofing felt for the inner covering of the top is not permitted. Moisture-proof paper is secured with veneer planks by means of nails. The joints of moisture-proof paper must have an overlap of 150 to 200 mm and be secured with an additional veneer plank.

7. Holes in the wood for bolts must exceed the bolt diameter by 1 or 2 mm. The recess for the head of the countersunk bolt must correspond to the head size.

8. Coach bolts and screw nails must be screwed only by means of a wrench and a screw driver.

9. All metal parts must have anti-corrosive coatings.

10. To protect ruberoid from damage, fit protective strips in places where the lifting eyes of the container are located.

11. All the projecting nails must be bent.

12. Marking on the boxes must be clear. The size of the letters and figures should be 50 to 100 mm. The outside surfaces of the container and box end face walls should bear the following inscriptions: gross weight, No. of the container and TOP, DO NOT TURN OVER. Besides this, secured to one of the container end face walls is a frame for the Packing List which is sealed after packing. The box should be sealed at four sides. In places where seals are fitted, recesses 10 mm deep are drilled. The seals are fixed in position by means of a steel strip with nails. On the outside surface of the box or container a tally is cemented or secured. The tally indicates the date, the guaranteed period of storage of processed parts and assemblies and the date of reprocessing. A copy of the tally is packed together with the Packing List.

5. PACKING UNITS

General

The prepared packing should be placed on a ground specially prepared for this purpose. To pack units of considerable weight, use hoisting devices of corresponding load-lifting capacity. The flaps of the first and the second detachable wing parts, ailerons, elevator, rudder, landing gear fairings, engine nacelles, air intakes, noses of the first and second detachable wing parts should be lifted manually. The packing of these units is shown in Figs 136 through 149.

Packing Front Pressurized Cockpit

To place the front pressurized cockpit into the carcass packing, it is necessary to have a special hoisting device and a crane with a load-lifting capacity of not less than 3 tons.

The hoisting device is a rod (tube) to the ends of which cables are attached. The cables are covered with soft straps and provided with locks to secure the units along frames Nos 5 and 11. The position of the front pressurized cockpit in the carcass packing and means of its attachment are shown in Fig.150.

Packing Fuselage Nose Section

The fuselage nose section is placed into packing by means of a special hoisting device and a crane with a load-lifting capacity of not less than one ton. The hoisting device for the nose section is similar to that for the front pressurized cockpit.

[redacted]

50X1-HUM

The fuselage nose section is secured with bands over frames Nos 13 and 25. The position of the nose section in the carcass packing and the means of its attachment are shown in Fig.151.

Packing Fuselage Tail Section

The fuselage tail section is placed into packing by means of a special hoisting device and a crane with a load-lifting capacity of not less than 5 tons. The hoisting device is a cigar-shaped tubular truss, 10270 mm long, to the ends of which the bell cranks are fastened at the top and at the bottom. Attached to each upper bell crank are two pairs of cables connected to the hoisting ring through the bell cranks. The bell cranks distribute the load so that both cables are equally loaded. Connected to the lower bell cranks are cables covered with felt and provided with locks. The cables serve to secure the unit along frames Nos 33 and 56. The position of the fuselage tail section in the packing and the means of its attachment are shown in Fig.152.

Packing Rear Pressurized Cockpit

The rear pressurized cockpit is placed into packing by means of a special hoisting device and a crane with a load-lifting capacity of not less than 2 tons. The hoisting device is a rod (tube) to the ends of which are secured (at the top) cables running to the hoisting ring. Connected to the hoisting device ends from below are a cable with a snap hook on one side, and a cross tube joined to the cables covered with soft straps and provided with locks on the other side.

The unit is secured with straps along frame No.75. From the other side of the rod the snap hook is fastened to a special rigging unit secured by five bolts in the upper part of split frame No.69. The position of the rear pressurized cockpit in the packing and the means of its attachment are shown in Fig.153.

Packing First Detachable Wing Part

Prior to packing the first detachable part of the wing without the flap, the engine nacelle, the landing gear fairing, air intake and noses after being detached from the aircraft should be put from the horizontal to the vertical position with the front spar downward. This operation and placing the first detachable wing part into the packing are performed by means of a special hoisting device and a crane with a load-lifting capacity of not less than 3 tons. To put the first detachable wing part from the horizontal to the vertical position, place two bars with a section of 200x250 mm and 6 m. long on the floor and place on them the unit in the horizontal position by means of the transverse member included in the aircraft ground equipment set. Then, bolt the beams with lifting eyes to the fittings of the first detachable part of the wing in its split joint at the second spar. The lifting eyes of the beams are gripped by the suspensions of the hoisting device which is a truss provided with braces and a hoisting ring. By means of the crane the unit is put into the vertical position and placed into the packing. The position of the unit in the packing and its attachment are shown in Fig.154.

Packing Second Detachable Wing Part

After being detached from the aircraft but prior to being placed into the packing the second detachable part of the wing without the aileron, flap, noses and the fuel system pipe line should be turned with the front spar downwards. The operation of turning the unit (the second detachable part of the wing) and placing it into the packing is carried out by means of a special hoisting device and a crane with a load-lifting capacity of not less than 3 tons. The hoisting device for turning and placing the unit into the packing presents two tubular trusses, each provided with two special units which grip the second detachable part of the wing by its rigging units located on ribs Nos 10 and 15. Secured to the trusses are two cables running along the rollers secured to the rod. The rod is connected to the lifting eye by means of cables. When turning the unit, the rollers on the rod get self-aligned to fit the unit centre of gravity both in the horizontal and vertical positions. The position of the unit in the packing and its attachment are shown in Fig.155.

Packing Stabilizer

Place the stabilizer in the packing on the rib with the nose looking down. The unit can be put from the horizontal to the vertical position by means of a special hoisting device and a crane with a load-carrying capacity of not less than 0.5 ton or manually if the hoisting device is not available.

The hoisting device is a tubular truss provided with three special units which grip the stabilizer by its rigging units. Secured to the tubular truss are two cables. Rollers are attached to the rod of the hoisting device connected to the hoisting ring by means of cables. When turning the unit from the horizontal to the vertical position, the rollers moving over the cables get aligned to fit its centre of gravity with the unit both in the horizontal and vertical positions. The position of the unit in the packing and its attachment are shown in Fig.156.

Packing Fin

Place the fin in the packing with the nose looking down. Put the fin from the vertical position on the nose and place it into the packing by means of a hoisting device and a crane with a load-lifting capacity of not less than 0.9 ton or manually in case the hoisting device is not available. The hoisting device for the fin is a rod provided with a clamp to be secured to the crane hook and with two rollers fixed in position on the rod cantilever. Running along the rollers are two cables terminating in two pairs of bushes. The bushes are fitted over the dowels of the fin rigging units and are prevented from being displaced in the longitudinal plane by means of locking pins. The fin suspended in this manner can be easily turned with the nose down and placed in the packing. The position of the fin in the packing and its attachment are shown in Fig.157.

Packing Landing Gear Nose Leg with Wheels

Pack the landing gear nose leg with the wheels by means of a hoisting device and a crane with a load-lifting capacity of not less than 0.5 ton. The hoisting device presents a hoisting ring to which two cables are secured. The cables pass through the rubberized hoses and terminate in snap hooks. In case the hoisting device is not available, the landing gear nose leg can be placed on the carcass lower frame manually and fixed in position as shown in Fig.158.

[redacted]

50X1-HUM

Packing Bogey and Landing Gear Main Leg

The main leg bogey is rolled manually on the carcass frame, placed in position in the support and fired as shown in Fig.159.

Packing Landing Gear Main Leg Shock Absorber

Pack the landing gear main leg shock absorber by means of a hoisting device and a crane with a load-lifting capacity of not less than 0.5 ton. The hoisting device for lifting the shock absorber is similar to that for lifting the landing gear nose leg. The position of the shock absorber in the packing and its attachment are shown in Fig.160.

6. LOADING PACKED UNITS

Packed units are placed on trucks, sledges or flat cars with the aid of a hoisting device or a tractor by means of poles and cables.

Fig.161 shows a container with a hoisting device which has four cables 1 terminating in snap hooks 4 fixed to hoisting ring 3. The container is gripped by lifting eyes 2 and by means of a crane is loaded on any means of transport. Fig.162 shows a schematic diagram of loading the container on the sledge prevented from being moved and turned over at the moment of loading by two stands 2 and block 1. Loading is carried out as follows: place two poles 3 on the edge of the sledge and place blocks 4 on the sledge frame parallel to the poles; secure the container with cable 5 passed through lifting eyes 6 and attach it to the tractor. The container is loaded on a flat car in the same manner as it is loaded on the sledge. The difference is that the flat car need not be protected from being displaced or turned over. Loading the units in carcass packing is shown in Fig.163.

To load units in carcass or shield packing by means of a crane, it is necessary to have special hoisting devices which differ from each other in size and section of their parts depending on the weight and overall dimensions of packed units. Fig.164 shows the schematic diagram of loading the unit in carcass packing by means of a hoisting device having rectangular frame 1 at the corners of which plates 2 are welded. Cables 3 are a load-carrying link between plates 2 and clamp 4. Cables 5 secure the unit in position. The unit in carcass packing placed on a flat car (Fig.165) is aligned to fit the centre of the flat car and fixed to it in the following manner: to prevent the unit from moving, blocks 1 measuring 100x100x500 mm are secured to the flat car floor from both sides of each corner of the lower frame with nails, 6x200 mm; to prevent the unit from turning over during the movement of the flat car, bracing wire ropes 2 of annealed wire, 3 mm in diameter, made up of six separate wires twisted together. The fuselage tail section exceeds the length of a four-axle flat car, therefore, the neighbouring flat cars must have spaces free from cargoes corresponding to the length of the projecting part of the tail section with the allowance for the train turns. When transported by truck (Fig.166) or sledge (Fig.167), packed units are secured in position approximately in the same way as when transported by flat car.

7. UNLOADING PACKED UNITS

Packed units can be unloaded from various means of transport by means of special hoisting devices and a crane (See Fig.164). In case these means are not available, use cables and tractors or winches. When the packed unit slides along the poles, the packing must be kept from overturning by means of securing wire ropes (See Figs 162 and 163).

[redacted]

50X1-HUM

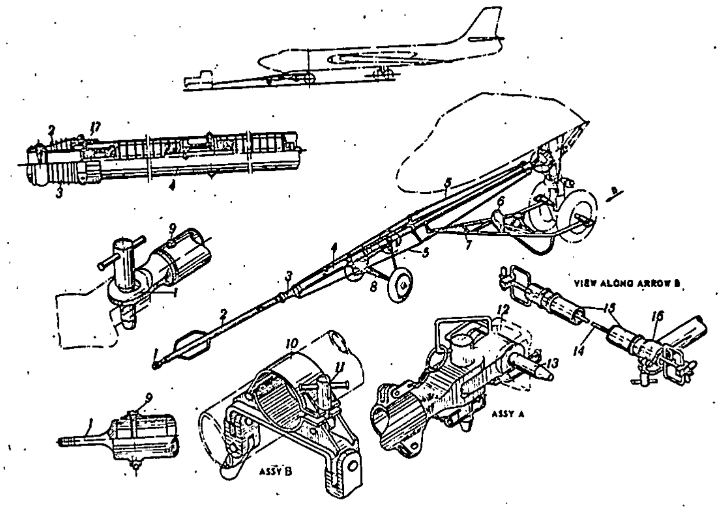

FIG.1. TOW-BAR FOR TOWING AIRCRAFT WITH NOSE FORWARD

1 – eye; 2 – rod; 3 – boot; 4 – shock absorber; 5 – brace; 6 – strap; 7 – swivel frame; 8 – adjustable bogey; 9 – shear pin; 10 – movable strap; 11 – coupling bolt; 12 – hinge; 13 – retainer; 14 – strainer; 15 – trunnion; 16 – split straps; 17 – rod guide.

[redacted]

50X1-HUM

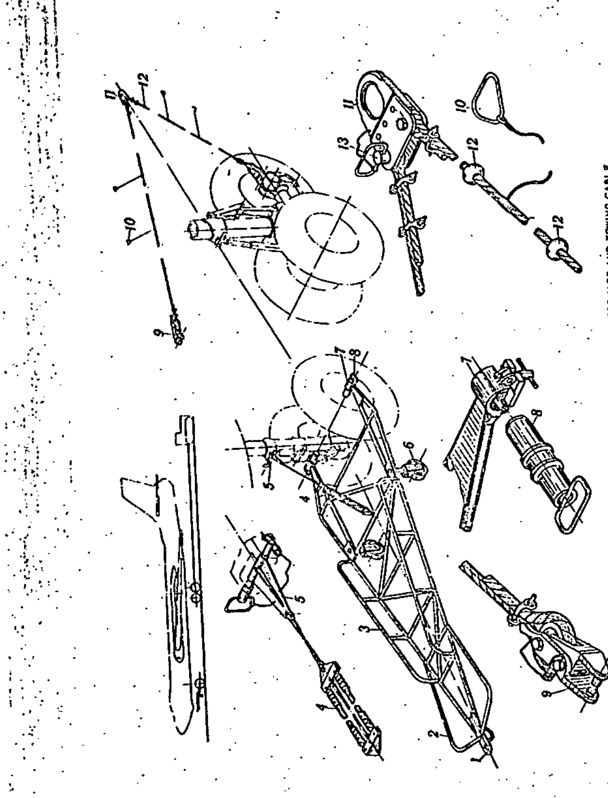

FIG.2. NOSE WHEEL CONTROL GEAR FOR TOWING AIRCRAFT WITH TAIL FORWARD AND TOWING CABLE
1 – eye; 2 – hand grips; 3 – welded frame; 4 – shock absorber; 5 – bracket; 6 – wheels; 7 – split straps; 8 – trunnions; 9 – rigging bracket; 10 – clamps; 11 – towing yoke; 12 – bosses; 13 – retainer.

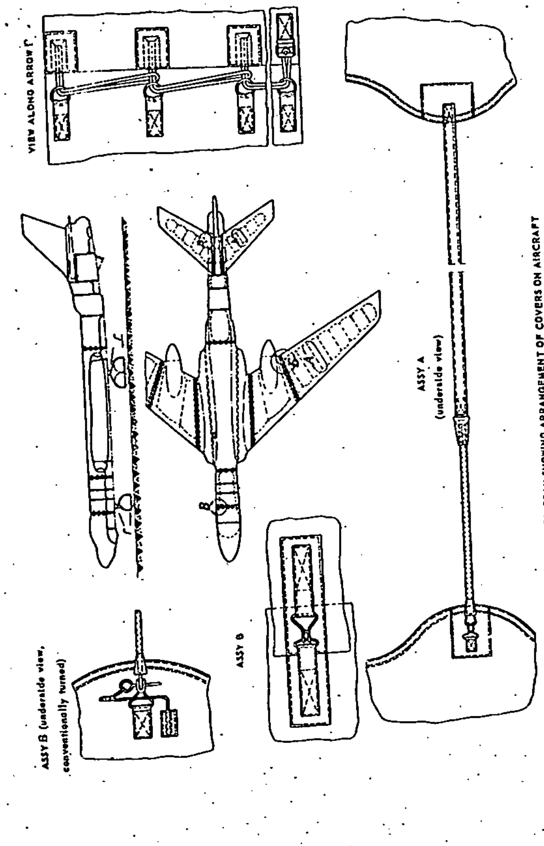

FIG. 3. DIAGRAM SHOWING ARRANGEMENT OF COVERS ON AIRCRAFT

[redacted]

50X1-HUM

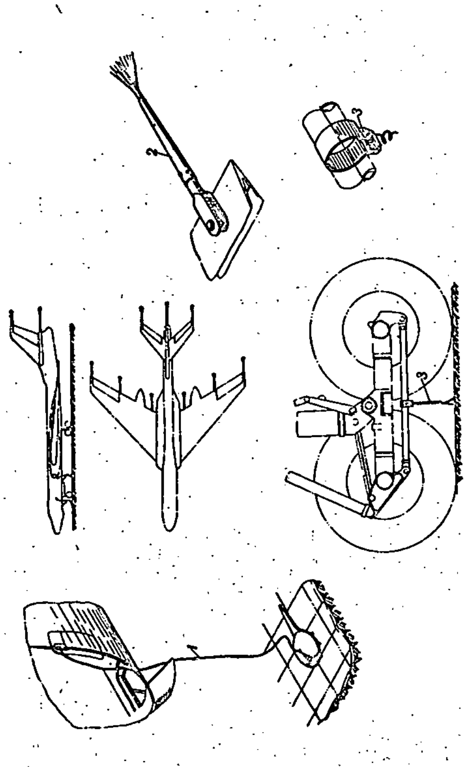

FIG. 4. DISCHARGERS AND AIRCRAFT GROUNDING DEVICES
1 – grounding cable with weight; 2 – antistatic; 3 – discharger with brush.

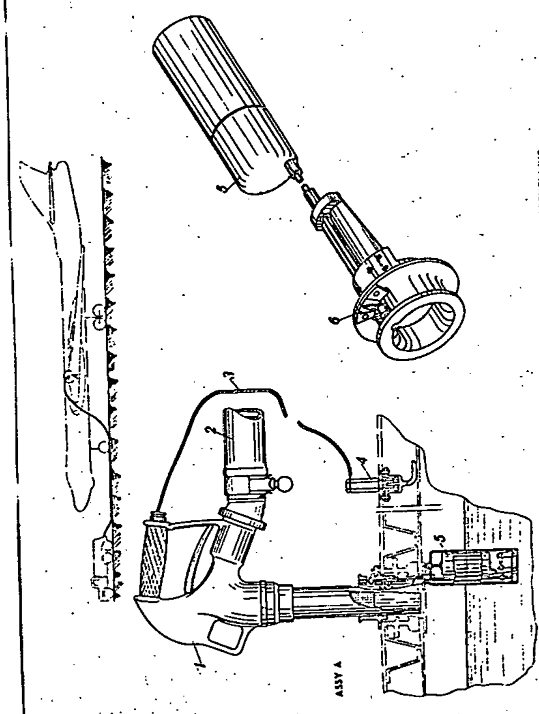

FIG. 5. GROUNDING OF FUEL DISPENSING GUN DURING AIRCRAFT REFUELLING
1 – fuel dispensing gun; 2 – hose; 3 – grounding cable; 4 – grounding terminal; 5 – float body; 6 – fuel level indicator.

50X1-HUM

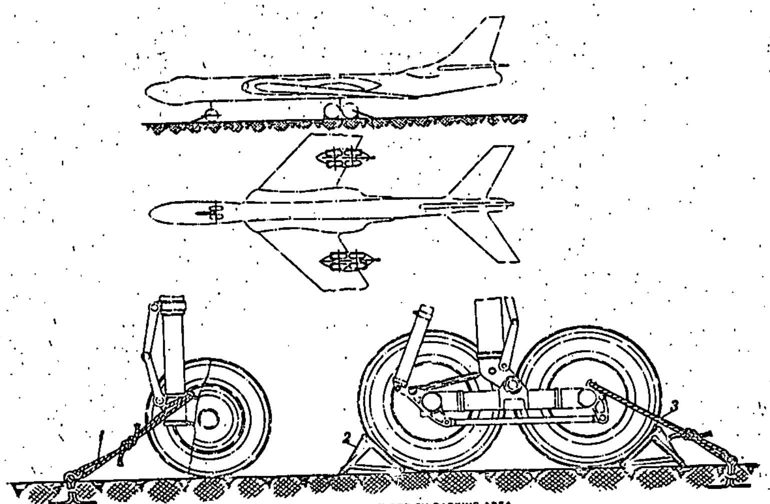

FIG. 6. AIRCRAFT SECURED ON PARKING AREA
1 – nose strut bracing; 2 – chocks; 3 – main landing gear wheel bracing.

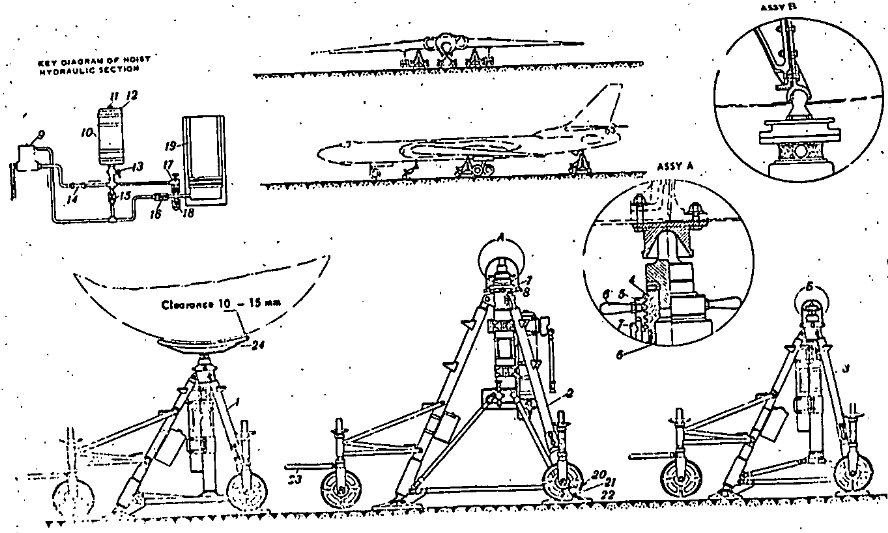

FIG. 7. AIRCRAFT HYDRAULIC HOISTS
1 – hoist fitted under frame No. 28; 2 – hoists fitted under first detachable wing parts; 3 – hoist fitted under frame No. 66; 4 – rod lead screw; 5 – hoisting nut; 6 – handle; 7 – locking nut; 8 – locking screws; 9 – hydraulic pump; 10 – reservoir; 11 – filler; 12 – drain valve; 13 – cock; 14 – filter; 15 – safety valve; 16 – non-return valve; 17 – by-pass cock; 18 – safety valve; 19 – hoist power section; 20 – handle; 21 – bolts; 22 – bed plates; 23 – tow-bar; 24 – support.

[redacted]

50X1-HUM

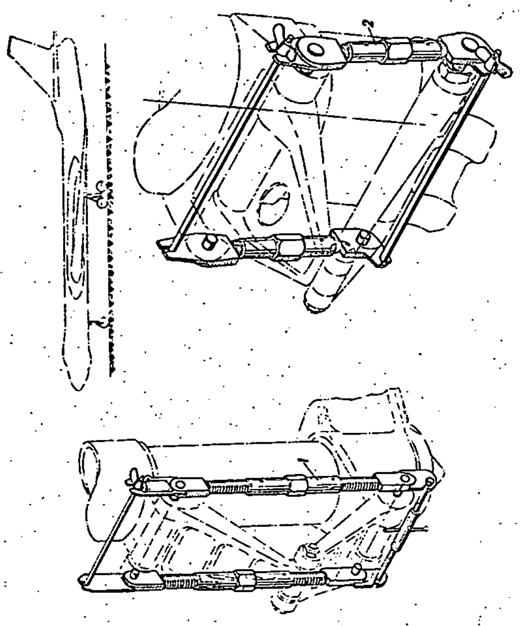

FIG. 8. ATTACHMENT OF SCREW CLAMPS TO LANDING GEAR STRUTS.
1 – nose strut screw clamp; 2 – main strut screw clamp.

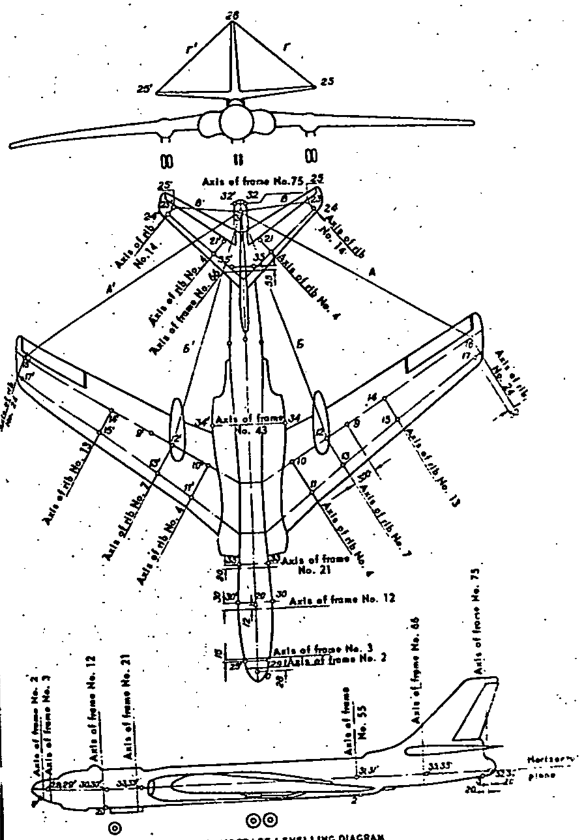

FIG. 9. AIRCRAFT LEVELLING DIAGRAM

[redacted]

50X1-HUM

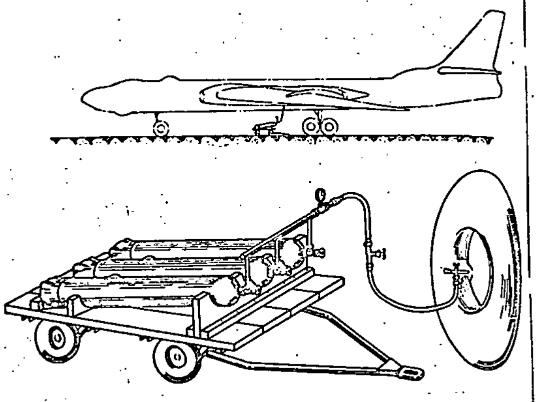

FIG. 10. CART-MOUNTED CYLINDER BANK FOR COMPRESSED AIR DELIVERY TO AIRCRAFT AIR SYSTEM, LANDING GEAR WHEEL TUBES, STABILIZING SHOCK ABSORBER AND LANDING GEAR SHOCK ABSORBERS

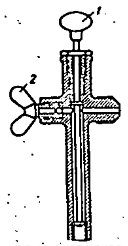

FIG. 11. WHEEL TUBE CHARGER

1 – rod knob; 2 – bolt for bleeding air pressure.

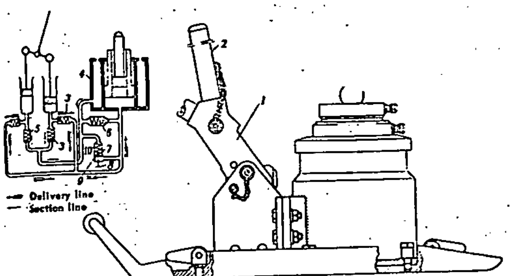

FIG. 12. HYDRAULIC JACK FOR REPLACEMENT OF LANDING GEAR WHEELS

1 – rocker; 2 – handle; 3 – suction valves; 4 – reservoir and power section; 5 – delivery valves; 6 – safety valve; 7 – spring; 8 – knob; 9 – ball; 10 – by-pass cock.

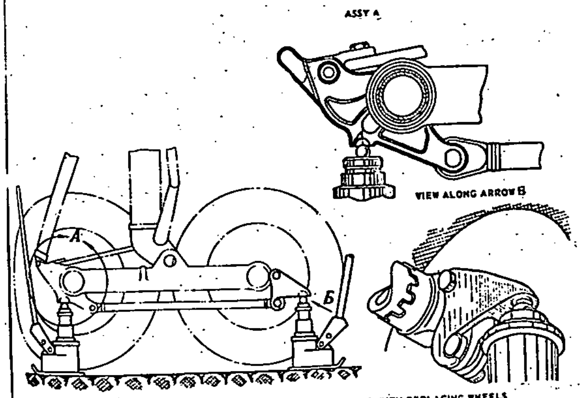

FIG. 13. FITTING HYDRAULIC JACKS UNDER MAIN STRUT BOGEY WHEN REPLACING WHEELS

[redacted]

50X1-HUM

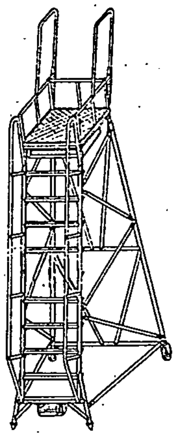

FIG. 14. ENGINE SERVICING LADDER

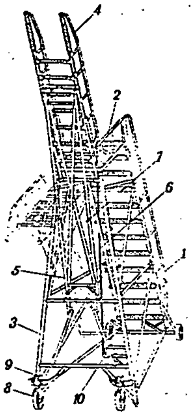

FIG. 15. STABILIZER SERVICING LADDER
1 – ladder; 2 – foot platform; 3 – front upright; 4 – hinged ladder; 5 – strut; 6 – cable; 7 – support hooks; 8 – self-locking wheels; 9 – screws; 10 – winch.

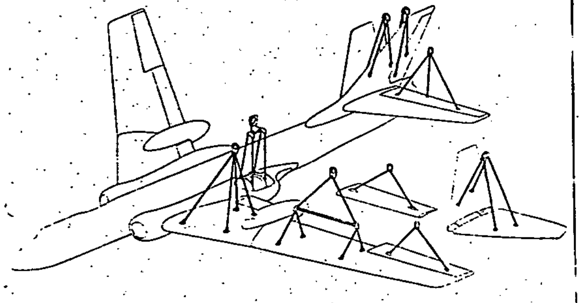

FIG. 16. ARRANGEMENT OF LIFTING EYES AND SLINGS ON INDIVIDUAL UNITS OF AIRCRAFT

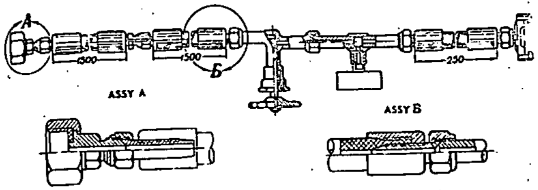

FIG. 17. FLEXIBLE HOSE FOR CHARGING AIRCRAFT AIR SYSTEM

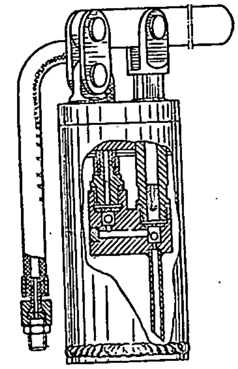

FIG. 18. NOSE STRUT THIRD DAMPER REPLENISHMENT UNIT

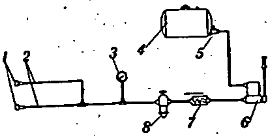

FIG. 19. DIAGRAM OF INSTALLATION FOR FLUSHING BRAKE SYSTEM OF LANDING GEAR WHEELS
1 – adapters for wheel pipe unions; 2 – hoses; 3 – pressure gauge МГ-60; 4 – reservoir; 5 – cut-off cock; 6 – hand pump HP-01; 7 – non-return valve; 8 – line filter АГР-260М.

[redacted]

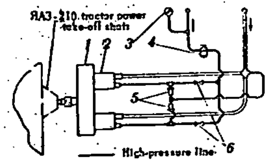

FIG. 20. DIAGRAM OF HYDRAULIC TEST UNIT
1 – reduction gear; 2 – variable capacity pumps; 3 – pressure gauge for 250 kg/sq.cm.; 4 – line filters; 5 – chokes; 6 – non-return valves.

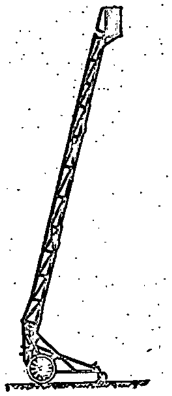

FIG. 21. TELESCOPIC LADDER FOR INSPECTION OF RUDDER

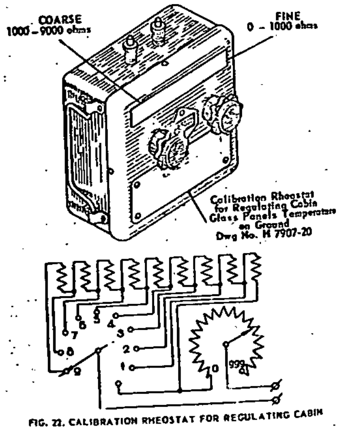

FIG. 22. CALIBRATION RHEOSTAT FOR REGULATING CABIN GLASS PANELS TEMPERATURE ON GROUND

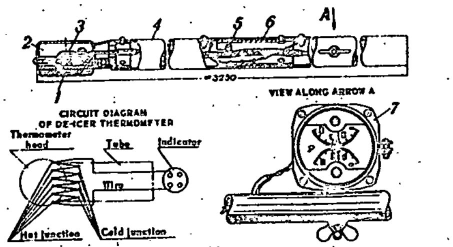

FIG. 23. DE-ICER THERMOMETER
1 – thermocouple; 2 – thermometer transmitter; 3 – wire; 4 – tube; 5 – pin; 6 – bush; 7 – thermometer dial.

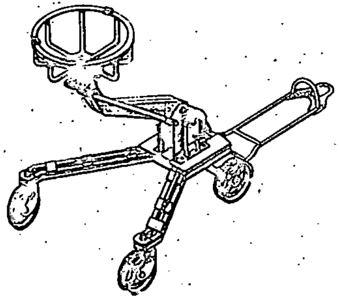

FIG. 24. HOIST FOR BELLY GUN MOUNTS

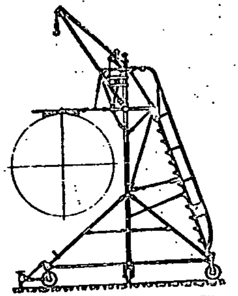

FIG. 25. LADDER-CRANE FOR SERVICING UPPER GUN MOUNT

[redacted]

50X1-HUM

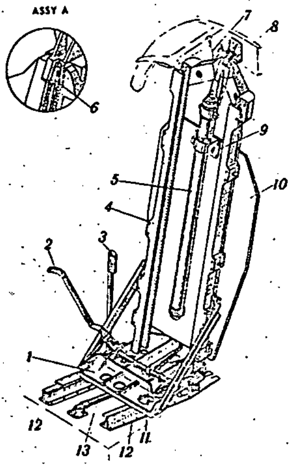

FIG. 26. FIXED PART OF STARBOARD PILOT'S EJECTION SEAT

1 – lower carriage; 2 – lock handle; 3 – emergency handle; 4 – guide rails; 5 – ejection gun; 6 – stop; 7 – cable interlocking ejection seat with canopy cover; 8 – bracket locking seat in position; 9 – bracket fastening ejection gun to armoured back plate; 10 – armoured back plate; 11 – bell crank; 12 – horizontal rails; 13 – seat recoiling cylinder.

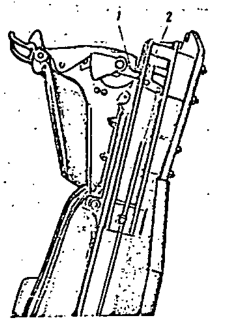

FIG. 27. POSITION OF LOCKING PIN IN EXTREME REAR POSITION OF SEAT

1 – cam; 2 – locking pin.

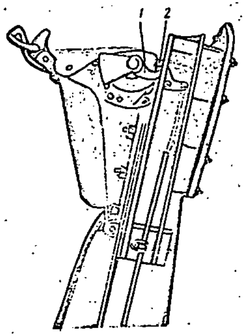

FIG. 28. POSITION OF LOCKING PIN IN INTERMEDIATE POSITION OF SEAT

1 – cam; 2 – locking pin.

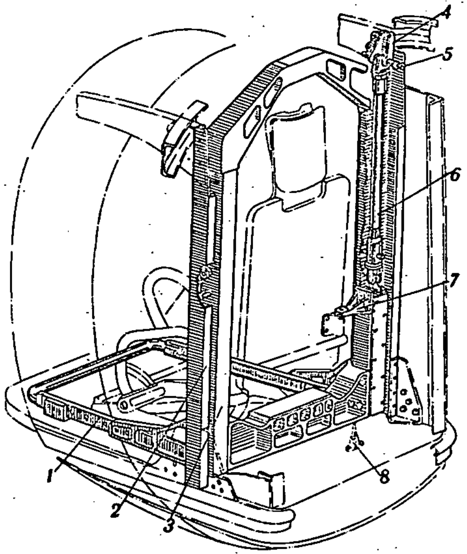

FIG. 29. SLIDING FRAME OF NAVIGATOR'S EJECTION SEAT

1 – horizontal rails; 2 – vertical guide rails; 3 – sliding frame; 4 – bracket fastening ejection gun to fuselage; 5 – quick-release bolt; 6 – ejection gun; 7 – bracket securing seat to sliding frame; 8 – cable interlocking ejection gun with aircraft emergency hatch cover.

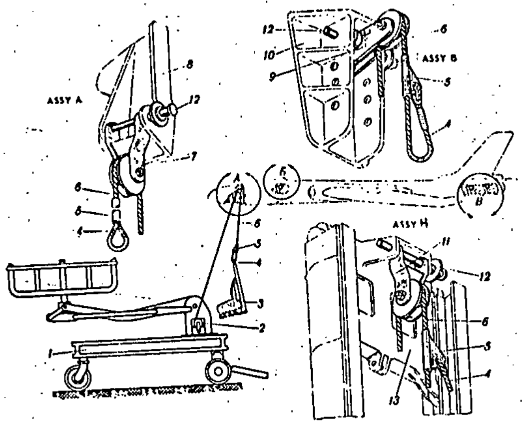

FIG. 30. DEVICE FOR REMOVAL AND INSTALLATION OF EJECTION SEATS ON AIRCRAFT

1 – bogey for removal and installation of lower gun mount on aircraft; 2 – winch; 3 – seat to be installed; 4 – device cable; 5 – lock; 6 – winch cable; 7 – device for lifting navigator's seat; 8 – bracket fastening ejection gun of navigator's seat to fuselage; 9 – device for installation of seats of radio operator and rear gunner; 10 – unit securing ejection gun of radio operator's and rear gunner's seats to fuselage; 11 – device for lifting navigator-radar operator's seat; 12 – quick-release bolt fastening seat ejection gun to fuselage; 13 – sliding carriage of navigator-radar operator's seat.

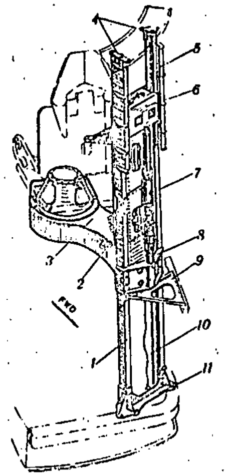

FIG. 31. INSTALLATION OF NAVIGATOR-RADAR OPERATOR'S EJECTION SEAT

1 – vertical guide rails; 2 – ejection gun; 3 – base; 4 – bracket fastening guide rails to blister edging; 5 – additional guide rails; 6 – sliding carriage; 7 – actuating cylinder; 8 – bracket securing actuating cylinder; 9 – corner plate securing guide rails to navigator-radar operator's port mount; 10 – cable interlocking ejection gun with hatch cover; 11 – bracket fastening guide rails to hatch edging.

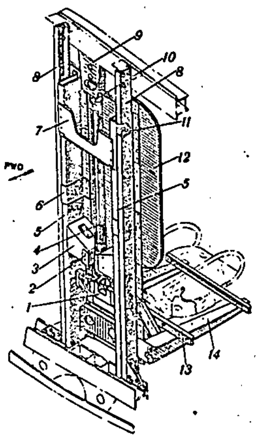

FIG. 32. INSTALLATION OF RADIO-OPERATOR'S EJECTION SEAT

1 – bracket; 2 – plate; 3 – bracket securing ejection gun to seat; 4 – ejection gun; 5 – beams; 6, 7 – plates; 8 – vertical guide rails; 9 – bracket; 10 – quick-release bolt; 11 – guide rollers; 12 – sheet; 13 – guide rails for transversal movement of seat; 14 – bracket.

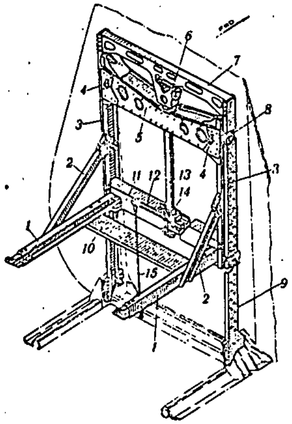

FIG. 33. INSTALLATION OF GUNNER'S EJECTION SEAT

1 – horizontal guide rails; 2 – brace; 3 – profile; 4 – eye; 5 – beam; 6 – quick-release bolt; 7 – bracket; 8 – guide roller; 9 – vertical guide rails; 10 – plate; 11 – bracket; 12 – axle; 13 – ejection gun; 14 – lever; 15 – cable interlocking ejection gun with hatch cover.

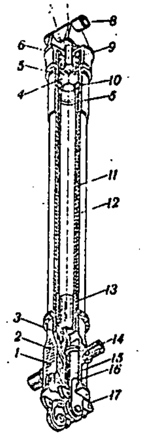

FIG. 34. EJECTION GUN OF SEAT EJECTE[D] FROM AIRCRAFT DOWNWARD

1 – head; 2 – hole for checking presence of explosive charge; 3 – trap; 4 – ball lock piston; 5 – packing rings; 6 – cover; 7 – washer; 8 – unit securing ejection gun to fuselage; 9 – ball lock spring; 10 – lock ball; 11 – piston; 12 – cylinder; 13 – explosive charge; 14 – journals fastening ejection gun to seat; 15 – striker; 16 – main spring; 17 – arming pin.

[redacted]

50X1-HUM

[redacted]

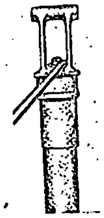

FIG. 35. DISENGAGEMENT OF EJECTION GUN BALL LOCK

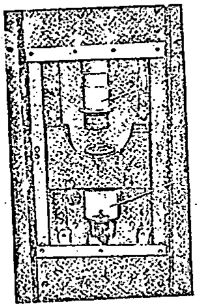

FIG. 37. SEAT EJECTED FROM AIRCRAFT DOWNWARD (PISTON OF EJECTION GUN IS SCREWED OUT OF HEAD AND LIFTED)

1 – piston; 2 – ejection gun head.

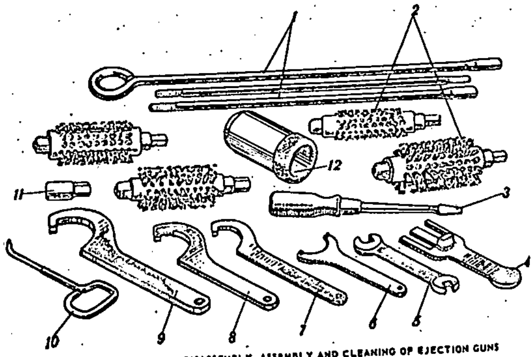

FIG. 36. TOOLS FOR DISASSEMBLY, ASSEMBLY, AND CLEANING OF EJECTION GUNS

1 – cleaning rods; 2 – brushes for cleaning ejection gun cylinders; 3 – screw driver; 4 – wrench for fitting arming pins in ejection gun heads of seats ejected from aircraft downward; 5 – wrench, 5 = 12 – 14; 6 – wrench for ejection gun piston of seats ejected from aircraft downward; 7 – wrench for lock nut securing firing mechanism to inner cylinder of ejection gun (TCM-1880); 8 – wrench for lock nut securing body of ejection gun ball lock; 9 – wrench for lock nut of lower attachment yoke; 10 – hook for pulling off piston of ejection gun ball lock; 11 – discharger; 12 – mandrel for assembly of ejection gun.

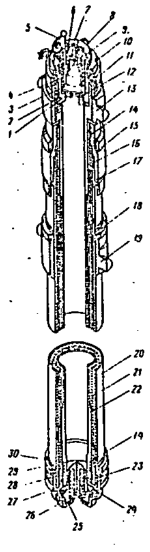

FIG. 38. TELESCOPIC EJECTION GUN, TYPE TCM-1880, OF SEATS EJECTED FROM AIRCRAFT UPWARD

1 – hole for cocking firing mechanism; 2 – firing mechanism body; 3 – striker with two firing pins; 4 – main spring; 5 – safety pin; 6 – arming pin; 7 – roller; 8 – indicator showing presence of explosive charge in cylinder; 9 – firing mechanism head; 10 – lock nut; 11 – nut fastening firing mechanism to inner cylinder; 12 – hole for indicator showing presence of explosive charge; 13 – upper attachment yoke with journals; 14 – spring-loaded seal; 15 – shock absorber bush; 16 – rubber shock absorber; 17 – sleeve; 18 – lock nut; 19 – lower attachment yoke with journals; 20 – outer cylinder; 21 – mid cylinder; 22 – inner cylinder; 23 – holes for powder gases; 24 – balls of ball lock; 25 – aluminum gasket; 26 – ball lock spring; 27 – ball lock body; 28 – circular shoulder; 29 – lock nut; 30 – ball lock piston.

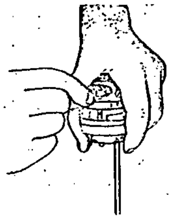

FIG. 39. FITTING ARMING PIN THROUGH PORT IN ROD OF EJECTION GUN FIRING MECHANISM STRIKER

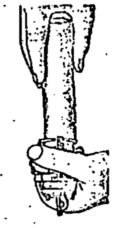

FIG. 40. JOINING EXPLOSIVE CHARGE WITH EJECTION GUN FIRING MECHANISM

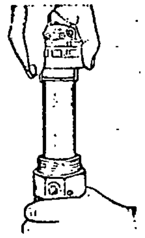

FIG. 41. MOUNTING FIRING MECHANISM WITH EXPLOSIVE CHARGE ON EJECTION GUN

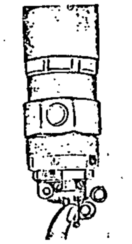

FIG. 42. CHECKING PRESENCE OF EXPLOSIVE CHARGE IN EJECTION GUN HEAD

[redacted]

50X1-HUM

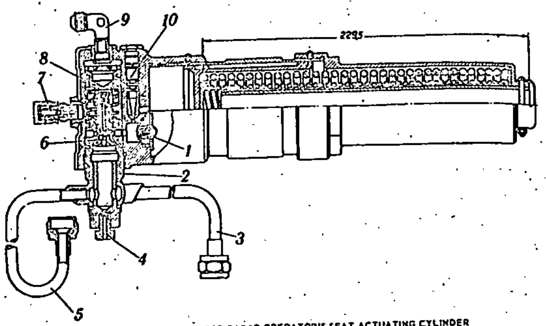

FIG. 43. HYDRAULIC LOCK OF NAVIGATOR-RADAR OPERATOR'S SEAT ACTUATING CYLINDER

1 – non-return valve; 2 – adapter; 3 – tube; 4 – plug; 5 – tube; 6 – lock; 7 – charging pipe union; 8 – piston; 9 – screw-in angle; 10 – throttle-type needle.

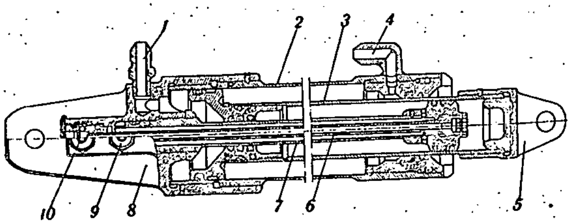

FIG. 44. NAVIGATOR-RADAR OPERATOR'S SEAT ACTUATING CYLINDER

1 – pipe union; 2 – outer cylinder; 3 – moving rod; 4 – angular pipe union; 5 – eye fastening actuating cylinder rod to seat sliding carriage; 6 – tube delivering air to recess of seat actuating cylinder; 7 – fixed rod; 8 – head; 9 – pipe union delivering air for lowering seat; 10 – pipe union delivering air for raising seat.

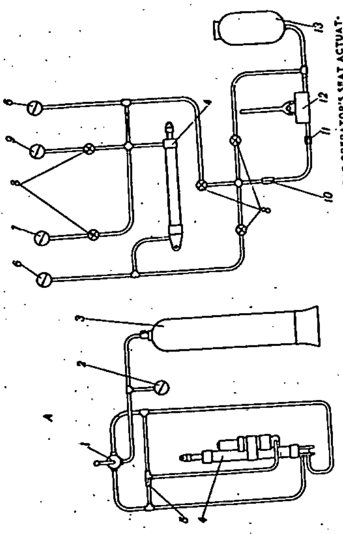

FIG. 45. KEY DIAGRAM OF BENCH FOR CHARGING NAVIGATOR-RADAR OPERATOR'S SEAT ACTUATING CYLINDER WITH AIR

A – air system of bench; Б – oil system of bench; 1 – air supply cock (625300A); 2 – pressure gauge with scale for 250 kg/sq.cm.; 3 – cylinder with compressed air; 4 – actuating cylinder; 5 – shuttle valve; 6 – pressure gauge with scale for 300 kg/sq.cm.; 7 – pressure gauge with scale for 25 kg/sq.cm.; 8 – shutoff valves; 9 – pressure gauge with scale for 50 kg/sq.cm.; 10 – nonreturn valve; 11 – filter; 12 – hand pump; 13 – tank for АМГ-10 hydraulic fluid.

[redacted]

50X1-HUM

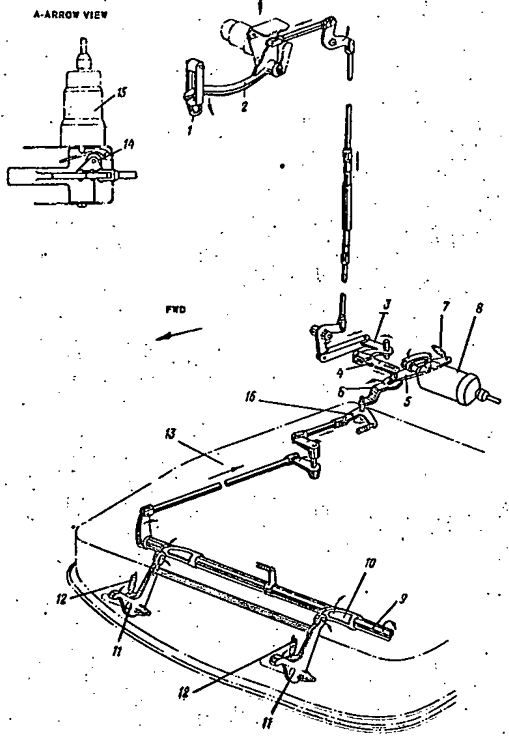

FIG. 46. MECHANICAL SYSTEM OF JETTISONING NAVIGATOR'S EMERGENCY HATCH COVER
1 = safety device; 2 = handle; 3 = bell crank; 4 = link; 5 = bell crank; 6 = lever; 7 = spring; 8 = cylinder of hatch cover jettisoning air system; 9 = axle; 10 = stops; 11 = hinged hooks; 12 = springs; 13 = hatch cover; 14 = roller; 15 = hatch depressurization valve; 16 = bell crank.

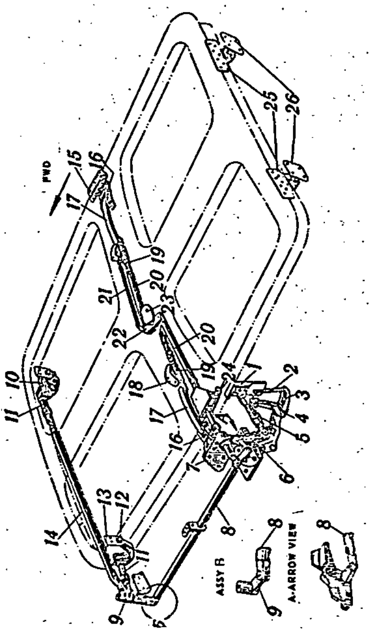

FIG. 47. MECHANICAL SYSTEM OF JETTISOKING COVER OF PILOTS' CANOPY EMERGENCY HATCH
1 – supporting bracket; 2 – seal; 3 – cover jettisoning handle; 4 – handle stop; 5 – cover jettisoning air system cylinder; 6 – bell crank; 7 – supporting bracket; 8 – rod; 9 – bell crank; 10 – supporting bracket; 11 – front stop; 12 – clamp; 13 – bearing plate; 14 – rod; 15 – supporting bracket; 16 – shackle; 17 – hook; 18 – supporting bracket; 19 – lock dowel; 20 – rod; 21 – spring; 22 – bell crank; 23 – supporting bracket; 24 – stop; 25 – brackets; 26 – stops.

[redacted]

50X1-HUM

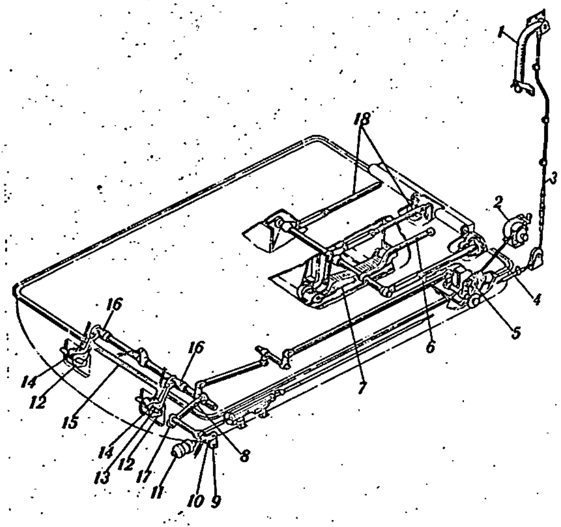

FIG. 45. MECHANICAL SYSTEM OF JETTISONING COVER OF NAVIGATOR-RADAR OPERATOR'S EMERGENCY HATCH

1 – handle; 2 – winch for raising hatch cover; 3 – cable of hatch cover jettisoning mechanical system; 4 – winch cable; 5 – mechanism disconnecting winch cable; 6 – handle for opening hatch cover from cockpit inside; 7 – handle for opening hatch cover from outside; 8 – rod; 9 – lever; 10 – bell crank; 11 – cylinder of hatch cover jettisoning air system; 12 – fixed stop on cover; 13 – step on hatch edging; 14 – hook; 15 – transverse member; 16 – stop; 17 – lever; 18 – dowels.

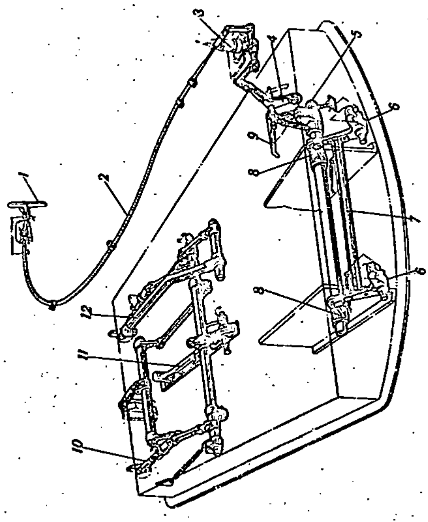

FIG. 49. MECHANICAL SYSTEM OF JETTISONING COVER OF REAR GUNNER'S EMERGENCY HATCH

1 – handle; 2 – cable; 3 – hatch depressurization valve; 4 – hinge bell crank; 5 – lever; 6 – hook; 7 – transverse member; 8 – support; 9 – lever; 10 – dowel; 11 – handle for opening hatch from outside; 12 – handle for opening hatch from inside.

[redacted]

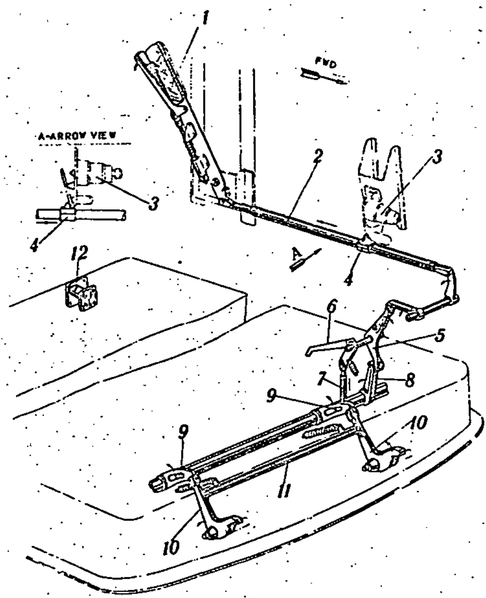

FIG. 50. MECHANICAL SYSTEM OF JETTISONING COVER OF GUNNER-RADIO OPERATOR'S EMERGENCY HATCH

1 – handle; 2 – rod; 3 – hatch depressurization valve; 4 – cam; 5 – hinge bell crank; 6 – lever; 7 – step; 8 – lever; 9 – supports; 10 – hooks; 11 – transverse member; 12 – fixed dowel.

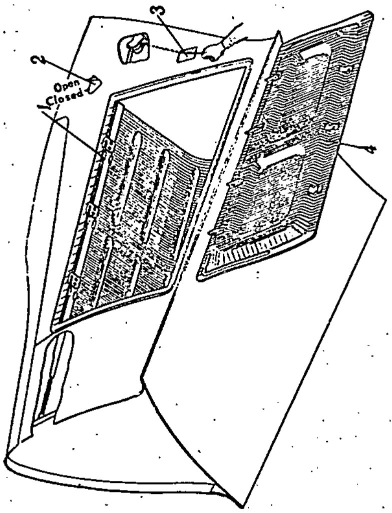

FIG. 51. LIFE BOAT CONTAINER IN DORSAL FIN

1 – lock; 2 – lock position indicator; 3 – auxiliary hatch; 4 – container cover.

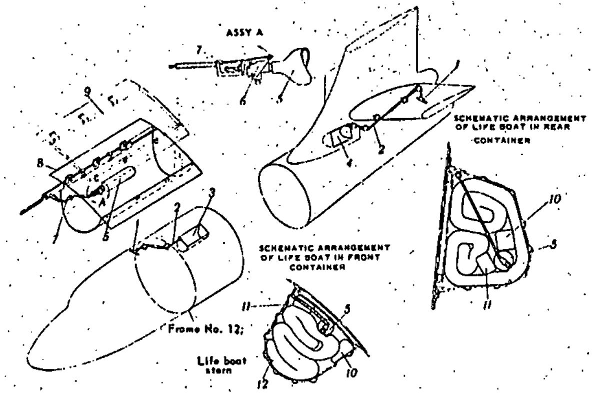

FIG. 52. SCHEMATIC DIAGRAM OF ARRANGEMENT OF LIFE BOATS ON AIRCRAFT AND PACKING THEM IN CONTAINERS

1 – handle for container cover lock remote control; 2 – cables; 3 – front life boat container; 4 – rear life boat container; 5 – carbon dioxide cylinder; 6 – cock lever; 7 – cable; 8 – lock; 9 – cover; 10 – nose pocket for life boat with oars; 11 – water-proof bag; 12 – eye for securing connector cord.

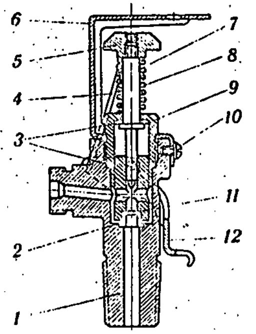

FIG. 53. IVANOV COCK OF CYLINDER O. LIFE BOAT, TYPE ЛАС-5М

1 – pipe union for connection of valve to cylinder neck; 2 – capsule; 3 – packing gaskets; 4 – connecting clamp; 5 – rod nut; 6 – bracket; 7 – rod with striker; 8 – rod spring; 9 – rod nut; 10 – screw fastening bracket to valve body; 11 – capsule nut; 12 – two-arm lever.

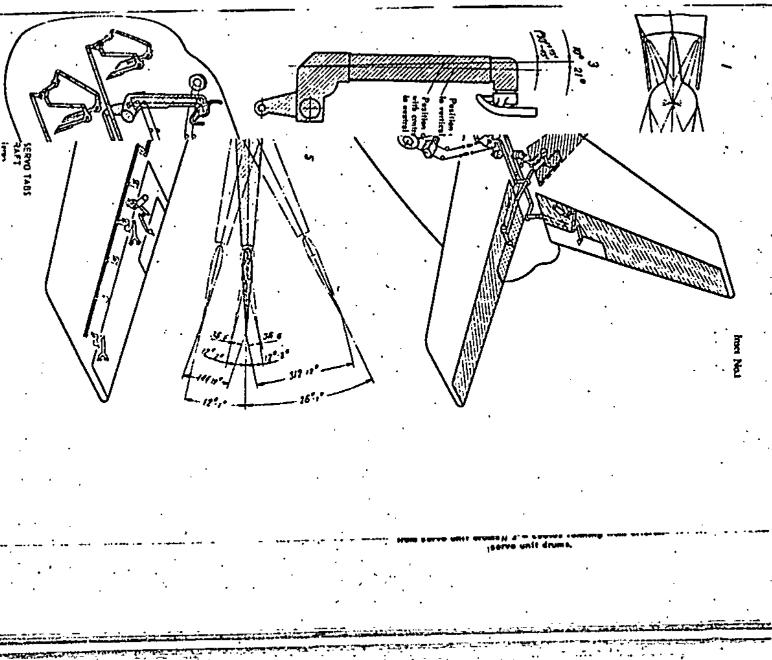

50X1-HUM

[redacted]

50X1-HUM

Inset No.1

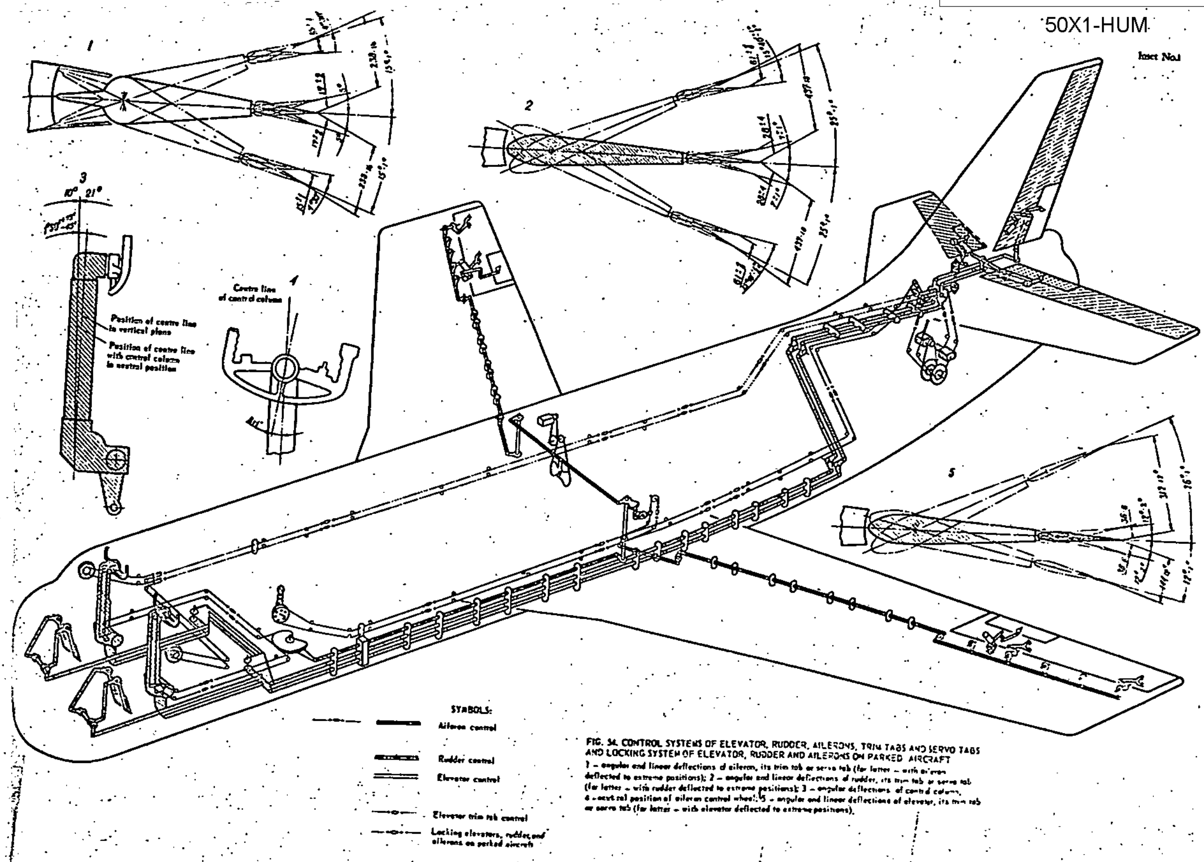

FIG. 54. CONTROL SYSTEMS OF ELEVATOR, RUDDER, AILERONS, TRIM TABS AND SERVO TABS AND LOCKING SYSTEM OF ELEVATOR, RUDDER AND AILERONS ON PARKED AIRCRAFT
1 – angular and linear deflections of aileron, its trim tab or servo tab (for latter – with aileron deflected to extreme positions); 2 – angular and linear deflections of rudder, its trim tab or servo tab (for latter – with rudder deflected to extreme positions); 3 – angular deflections of control column, 4 – neutral position of aileron control wheel; 5 – angular and linear deflections of elevator, its trim tab or servo tab (for latter – with elevator deflected to extreme positions).

[redacted]

50X1-HUM

Insert No.1

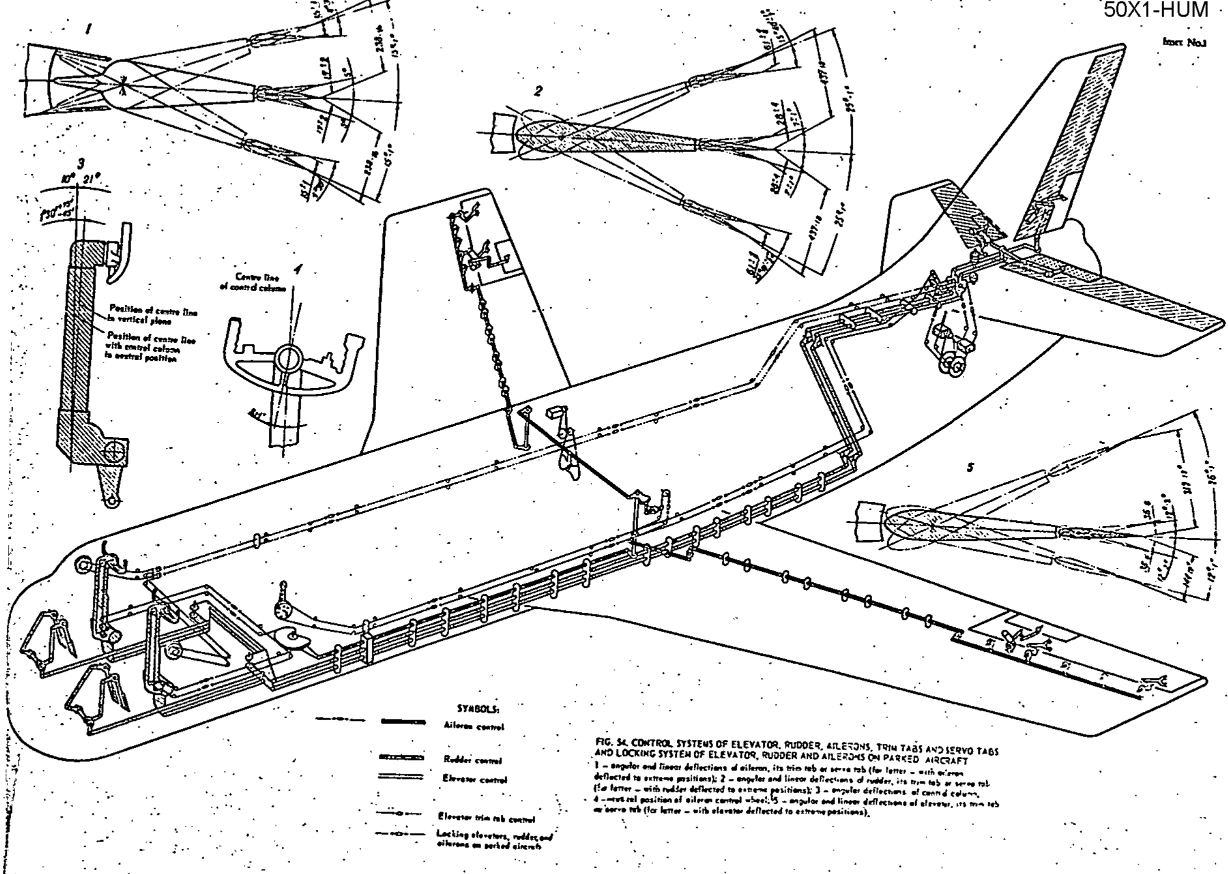

FIG. 54. CONTROL SYSTEMS OF ELEVATOR, RUDDER, AILERONS, TRIM TABS AND SERVO TABS AND LOCKING SYSTEM OF ELEVATOR, RUDDER AND AILERONS ON PARKED AIRCRAFT

1 – angular and linear deflections of aileron, its trim tab or servo tab (for latter – with aileron deflected to extreme positions); 2 – angular and linear deflections of rudder, its trim tab or servo tab (for latter – with rudder deflected to extreme positions); 3 – angular deflections of control column, 4 – neutral position of aileron control wheel; 5 – angular and linear deflections of elevator, its trim tab or servo tab (for latter – with elevator deflected to extreme positions).

[redacted]

50X1-HUM

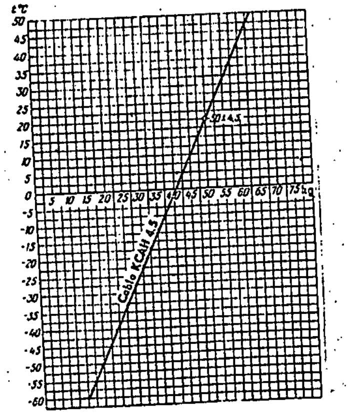

FIG. 55. CHART SHOWING PRELIMINARY TENSION OF AILERON CONTROL SYSTEM CABLES RUNNING THROUGH PILOTS' CABIN

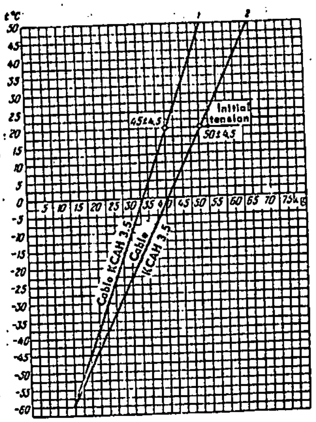

FIG. 56. CHART SHOWING PRELIMINARY TENSION OF CABLES CONNECTING AUTOPILOT SERVO UNITS WITH ELEVATOR, RUDDER, AND AILERON CONTROL SYSTEM:

1 – autopilot servo unit cables (excluding cables running from servo unit drums); 2 – cables running from aileron servo unit drums.

[redacted]

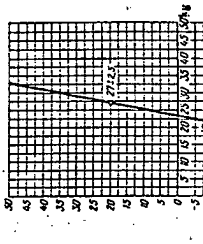

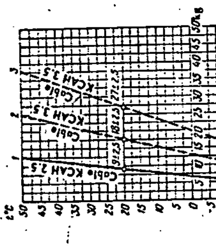

FIG. 57. CHART SHOWING PRELIMINARY TENSION OF ELEVATOR, RUDDER, AND AILERON LOCKING SYSTEM CABLES ON PARKED AIRCRAFT

1 – cables running to aileron locking mechanism; 2 – cables of main linkage arranged at frames Nos 28 to 48; 3 – cables of main linkage arranged at frames Nos 8 to 20.

FIG. 58. CHART SHOWING PRELIMINARY TENSION OF ELEVATOR TRIM TAB CONTROL CABLES

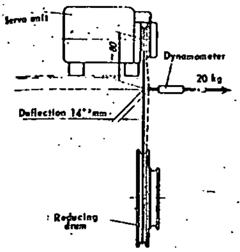

FIG. 59. MEASURING PRELIMINARY TENSION OF CABLES RUNNING FROM DRUMS OF AUTOPILOT ELEVATOR AND RUDDER SERVO UNITS

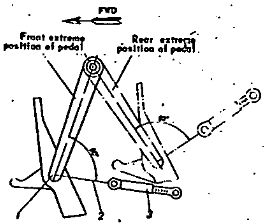

FIG. 61. MEASURING FRICTION FORCE IN RUDDER CONTROL SYSTEM

1 – pedal; 2 – twine; 3 – dynamometer.

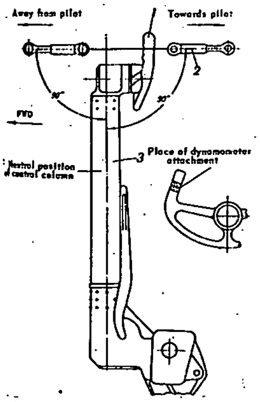

FIG. 60. MEASURING FRICTION FORCE IN ELEVATOR CONTROL SYSTEM

1 – control wheel; 2 – dynamometer; 3 – control column.

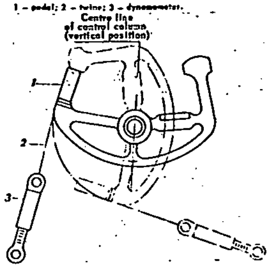

FIG. 62. MEASURING FRICTION FORCE IN AILERON CONTROL SYSTEM

1 – control wheel; 2 – twine; 3 – dynamometer.

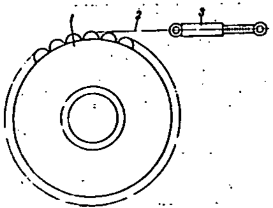

FIG. 63. MEASURING FRICTION FORCE IN ELEVATOR TRIM TAB CONTROL SYSTEM

1 – control wheel; 2 – twine; 3 – dynamometer.

[redacted]

50X1-HUM

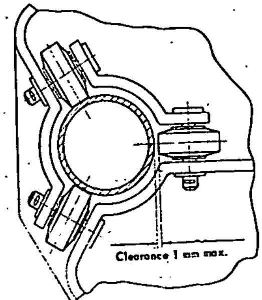

FIG. 64. MEASURING CLEARANCE BETWEEN PULLEYS OF GUIDE SUPPORTS AND TUBULAR ROD

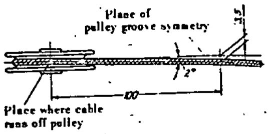

FIG. 65. DETERMINING CABLE MISALIGNMENT ON CONTROL PULLEYS

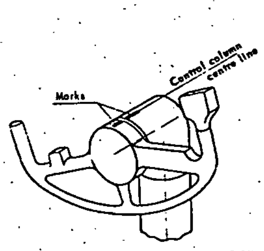

FIG. 66. MARKS ON CONTROL WHEEL MADE BY PILOT DURING FLIGHT TO DETERMINE DEFLECTION ANGLE OF CONTROL WHEEL WHEN CHECKING LATERAL BALANCING OF AIRCRAFT

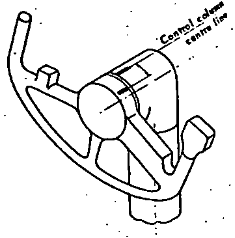

FIG. 67. LINEAR DISPLACEMENT OF MARKS ON CONTROL WHEEL MEASURED DURING POST FLIGHT INSPECTION

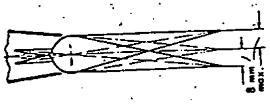

FIG. 68. AILERON "SCISSORS" MADE TO ELIMINATE DEFLECTION OF CONTROL WHEEL

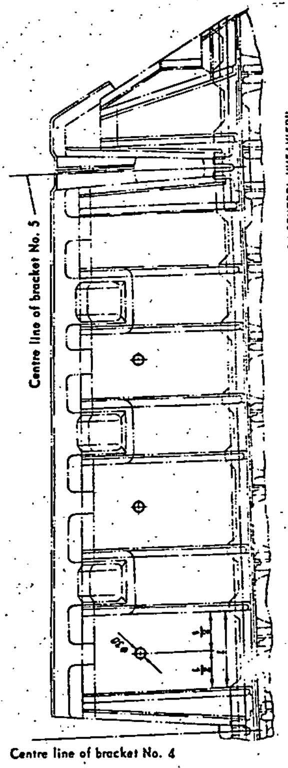

FIG. 69. AILERON LEADING EDGE WITH HOLES FOR MAKING AILERON CONTROL "HEAVIER"

[redacted]

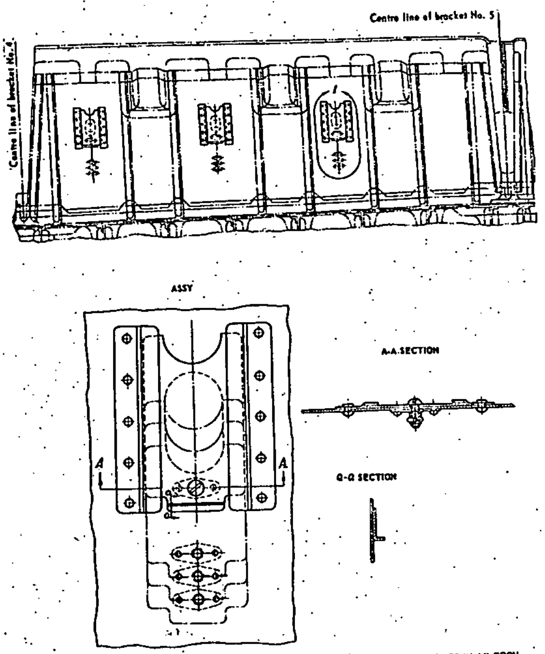

FIG. 70. AILERON LEADING EDGE AND LIDS REGULATING AREA OF THROUGH HOLES IN AILERON LEADING EDGE

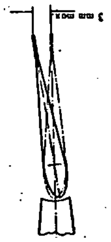

FIG. 72. DEFLECTION OF RUDDER TRIM TAB FROM NEUTRAL POSITION

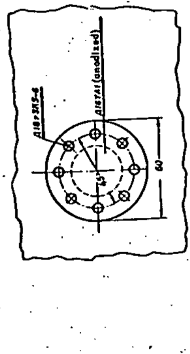

FIG. 71. PLUG FOR CLOSING HOLES IN AILERON LEADING EDGES

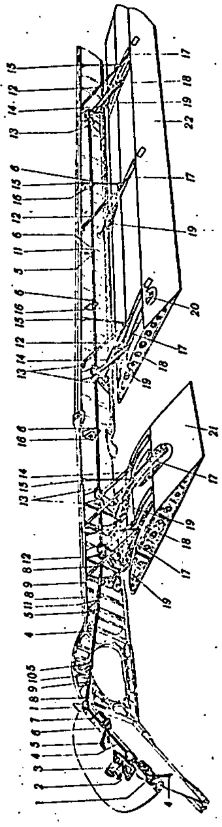

FIG. 73. FLAP CONTROL SYSTEM ON RIGHT OUTER WING PANEL

1 – left-and right-hand angular reduction gears; 2 – mechanism of MKB-11 limit switches (cut into supply circuit of МПД-3М set); 3 – electric mechanisms of МПД-3М set; 4 – transmission shafts; 5 – transmission main brackets with bearings; 6 – telescopic joints of transmission tubes in steel collars; 7 – mechanical limit switch MKB-2 (cut into supply circuit of warning horn) and mechanism of flap deflection transmitter with transmitter proper (belonging to УЗП-47 set); 8 – universal joints of transmission shafts; 9 – telescopic joints of transmission tubes in duralumin collars; 10 – wing rear spar; 11 – places for flanges of restricting connections; 12 – power brace struts of rails; 13 – transmission spline joints; 14 – jacks; 15 – side struts of guide rails; 16 – transmission intermediate brackets with bearings; 17 – guide rails; 18 – flap forked pivots; 19 – flap carriages; 20 – flap retracted position locks; 21 – inner flap; 22 – outer flap.

[redacted]

50X1-HUM

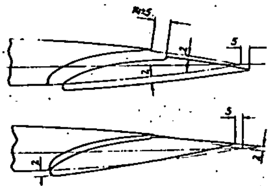

FIG. 74. PERMISSIBLE DEFLECTION OF FLAPS IN RETRACTED POSITION

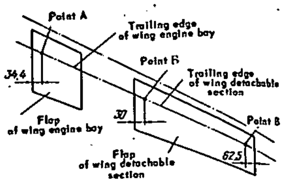

FIG. 75. LOCATION OF POINTS A, Б, AND B SERVING TO CHECK FLAP LINEAR DEFLECTION

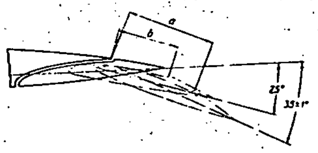

FIG. 76. MEASURING FLAP LINEAR DEFLECTION
a – linear deflection checked in points A, Б, and B when deflecting flap through 35 ± 1° (Fig. 75);
b – linear deflection checked in points A, Б, and B when deflecting flap through 25° (Fig. 75).

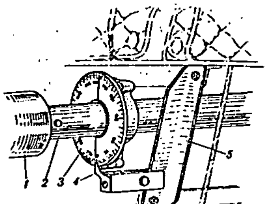

FIG. 77. ARRANGEMENT OF INSTRUMENT FOR MEASURING TWISTING ANGLE OF TRANSMISSION SHAFT
1 – reduction gear of МП-3М set; 2 – transmission shaft; 3 – dial; 4 – pointer; 5 – autopilot aileron servo unit attachment bracket.

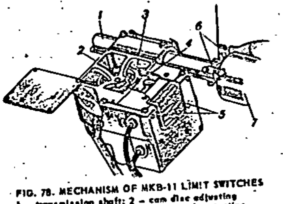

FIG. 78. MECHANISM OF MKB-11 LIMIT SWITCHES
1 – transmission shaft; 2 – cam disc adjusting screws; 3 – cam disc; 4 – limit switch actuating lever; 5 – limit switches (wires running to switches are not shown); 6 – adjusting notches with inscription УПВ (UPPER STOP) on transmission shaft and on МП-3М mechanism bracket; 7 – reduction gear of МП-3М set.

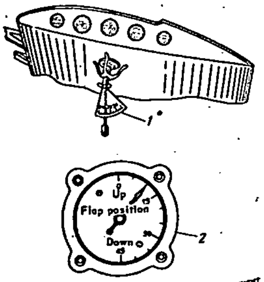

FIG. 79. PROTRACTOR WITH RUBBER ATTACHMENT FOR CHECKING УЗП-47 FLAP POSITION INDICATOR
1 – protractor; 2 – УЗП-47 indicator.

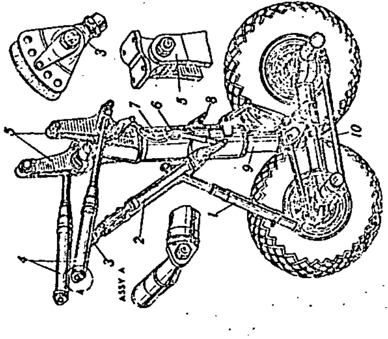

FIG. 81. LANDING GEAR MAIN LEG
1 – stabilizing shock absorber; 2 – strut; 3 – strut eye; 4 – hydraulic actuating cylinders; 5 – landing gear attachment frame; 6 – bogey tilting control rod; 7 – shock absorber cylinder; 8 – up-lock suspension eye; 9 – shock absorber rod; 10 – wheel bogey.

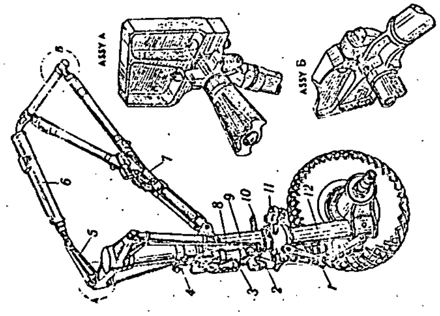

FIG. 80. LANDING GEAR NOSE LEG
1 – torsion link; 2 – link of rod actuating mechanism; 3 – main damper; 4 – throttle valve; 5 – landing gear retraction and extension lever; 6 – hydraulic actuating cylinder; 7 – collapsible strut with lock; 8 – follow-up system control rod; 9 – shock absorber cylinder; 10 – up-lock suspension eye; 11 – additional damper; 12 – shock absorber rod.

[redacted]

50X1-HUM

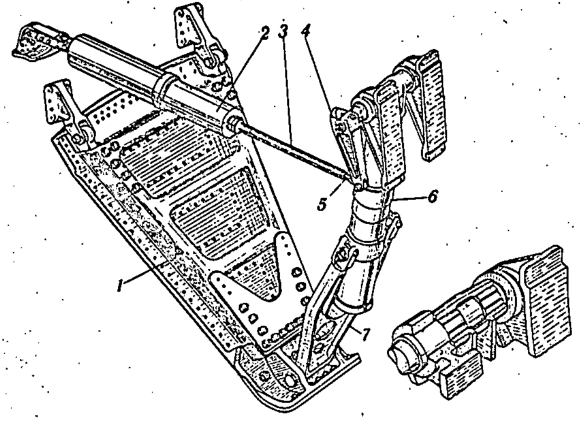

FIG. 82. TAIL SKID

1 — panel with steel reinforcement; 2 — electric mechanism МП—250; 3 — extension rod; 4 — lever designed for retraction and extension of tail skid; 5 — extension rod eye; 6 — shock absorber; 7 — shock absorber fork.

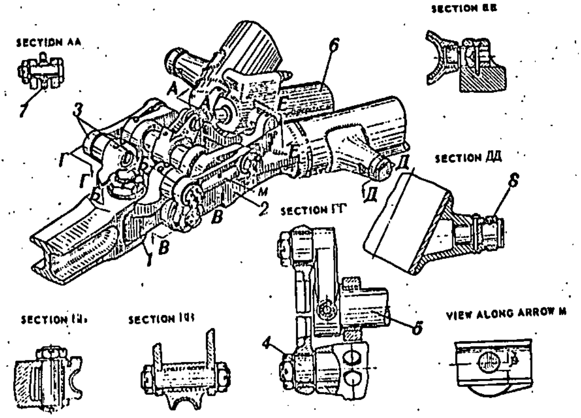

FIG. 83. LOCK OF LANDING GEAR NOSE LEG COLLAPSIBLE STRUT

1 — strut universal joint; 2 — strut upper fork; 3 — lock coupling links; 4 — eccentric; 5 — crank; 6 — lock hydraulic cylinder; 7 — adjustable eye of lock hydraulic cylinder; 8 — roller of strut closing and opening doors.

[redacted]

50X1-HUM

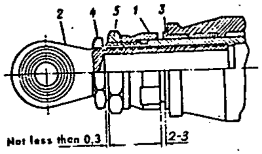

FIG. 84. END-PIECE OF LANDING GEAR NOSE LEG HYDRAULIC ACTUATING CYLINDER CONNECTED TO LOCK

1 – nut limiting travel of actuating cylinder rod; 2 – adjustable eye; 3 – bush of cylinder head; 4 – eye check nut; 5 – check nut.

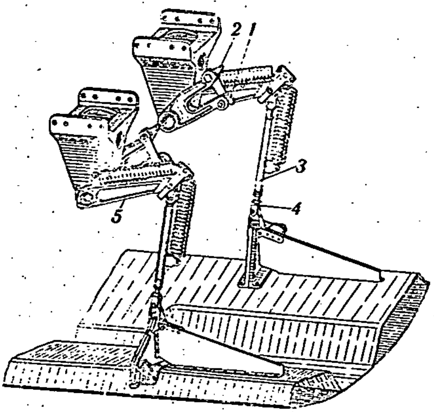

FIG. 85. LANDING GEAR NOSE LEG WELL DOORS ACTUATING MECHANISM
1 – adjusting eccentric; 2 – link motion; 3 – control rod; 4 – adjustable eye; 5 – lever.

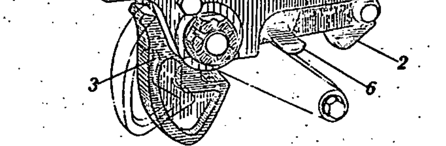

FIG. 86. UP-LOCK OF LANDING GEAR NOSE AND MAIN LEGS
1 – adjusting screw; 2 – latch; 3 – hook; 4 – rod; 5 – limit switch; type BK-44; 6 – pressure lever.

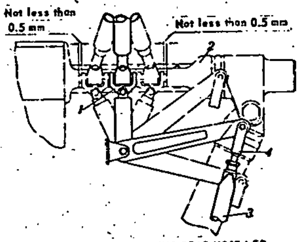

FIG. 87. POSITION OF LANDING GEAR NOSE LEG FOLLOW-UP SYSTEM WITH SLIDER IN EXTREME POSITIONS. SCHEMATIC DIAGRAM

1 – slider; 2 – shock absorber transverse member; 3 – follow-up system control rod; 4 – control rod adjustable eye.

[redacted]

50X1-HUM

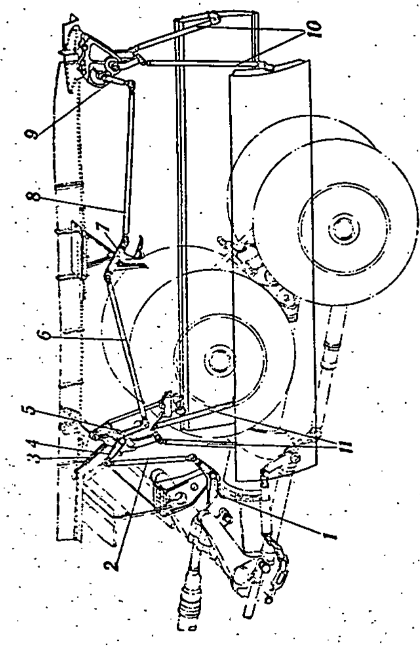

FIG. 88. ACTUATING MECHANISM OF LANDING GEAR MAIN LEG DOORS.SCHEMATIC DIAGRAM
1 – lower link motion; 2, 6, 8, 10, and 11 – control rods; 3 – spring; 4, 5 – front reducer levers; 7 – upper link motion; 9 – rear reducer lever.

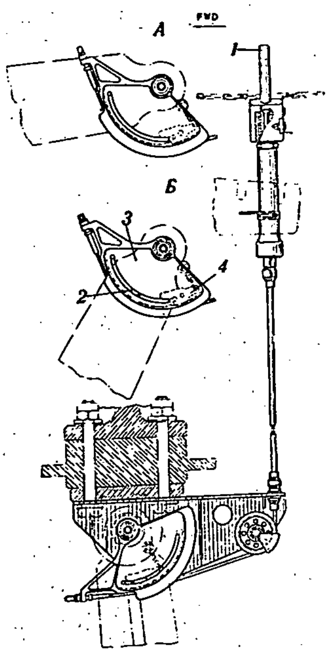

FIG. 89. LANDING GEAR MAIN LEG EXTENSION MECHANICAL INDICATOR
1 – indicator pin; 2 – eccentric; 3 – quadrant; 4 – pawl;
A – retracted position; Б – extended position.

(M4100-205); 8 – landing gear main leg attachment lock (M4106-0); 9 – [illegible] landing gear emergency retraction and extension line; [illegible]
(1228-2); 10 – pressure reducers (M5501-96); 11 – aircraft supply pipe union with check valve

[redacted]

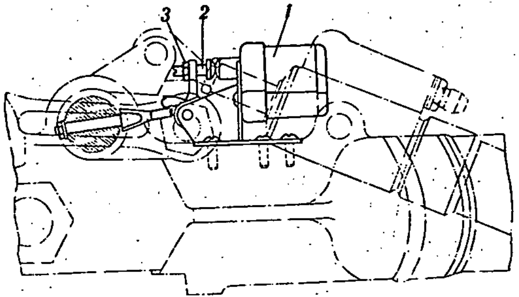

FIG. 90. LIMIT SWITCH, TYPE BK-2-140B, OF LANDING GEAR NOSE LEG
1 – limit switch, type BK-2-140B; 2 – adjusting screw; 3 – check nut.

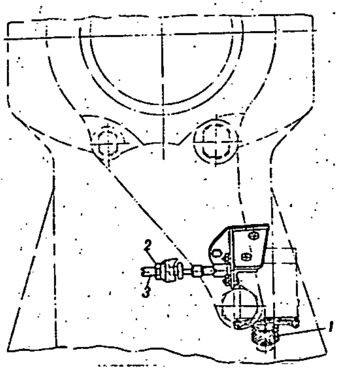

FIG. 91. LIMIT SWITCH, TYPE BK-44, OF LANDING GEAR MAIN LEG
1 – limit switch, type BK-44; 2 – check nut; 3 – adjusting screw.

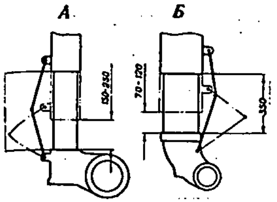

MEASURING AMOUNT OF COMPRESSION OF
GEAR NOSE AND MAIN LEG SHOCK STRUTS.
SCHEMATIC DIAGRAM
– nose leg strut; Б – main leg strut.

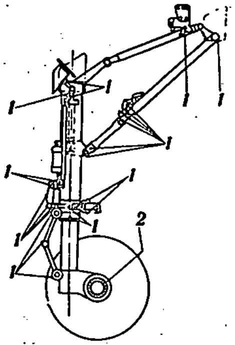

FIG. 93. SCHEMATIC DIAGRAM OF LANDING GEAR NOSE LEG LUBRICATION
1 – points at which lubricant, grade ЦИАТИМ-201, is applied; 2 – points at which lubricant, grade HK-50, is applied.

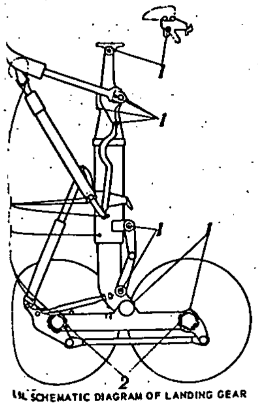

SCHEMATIC DIAGRAM OF LANDING GEAR
LEG LUBRICATION
points at which lubricant, grade ЦИАТИМ-201, is
2 – points at which lubricant, grade HK-50, is applied.

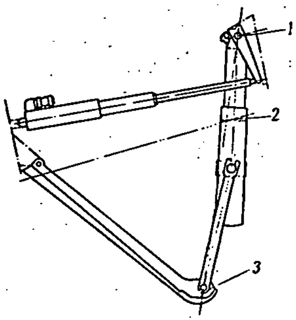

FIG. 95. SCHEMATIC DIAGRAM OF TAIL SKID LUBRICATION
1, 2, and 3 – points at which lubricant, grade ЦИАТИМ-201, is applied.

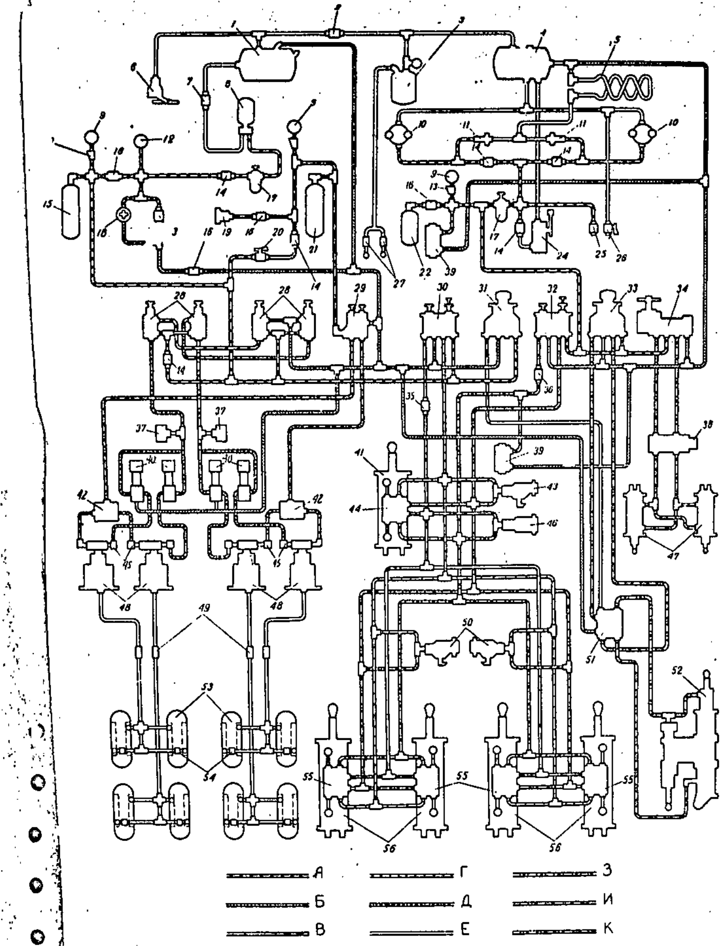

FIG. 96. KEY DIAGRAMS OF MAIN AND BRAKE HYDRAULIC SYSTEMS

1 – brake system tank; 2 – air flow restrictor, 3 – drain tank; 4 – main system tank; 5 – cooler, 6 – drain cock, 7 – elbow split valve, 8 – pumping station (465K), 9 – pressure gauges, 10 – pumps (units 435114), 11 – constant flow restrictors; 12 – oil pressure switch, type [illegible], 13 – needle-type throttle valves, 14 – non-return valves, 15 – hydraulic accumulator of wheel normal (main) brake line; 16 – straight split valves; 17 – line filters, 18 – shut-off cock; 19 – pressure drop warning unit, type [illegible], 20 – emergency hydraulic accumulator charging cock; 21 – emergency brake line hydraulic accumulator; 22 – main hydraulic system damping hydraulic accumulator, 23 – safety valve; 24 – hand pump, 25 – aircraft supply pipe union with non-return valve, 26 – aircraft supply pipe union with shut-off valve, 27 – non-return valves, 28 – normal (main) brake valves, 29 – emergency brake valves; 30 – landing gear emergency controls; 31 – bomb bay door emergency control, 32 – landin
gear normal (main) controls, 33 – bomb bay door n
(main) controls, 34 – landing gear nose leg wheel
panel, 35 – flow restrictor; 36 – throttle valve, 37
hydraulic switches, 38 – throttle cock, 39 – safety
valve, 40 – solenoid-operated slide valve, 41 – la
gear nose leg actuating cylinder, 42 – double cut-o
valves, 43 – landing gear nose leg attachment lock
44 – slide valve distributor; 45 – shuttle valves,
cylinder of landing gear nose leg collapsible strut
47 – landing gear nose leg wheel damping actuating
linders; 48 – pressure reducers, 49 – valves for co
tion of reference pressure gauges, 50 – landing gea
leg attachment locks, 51 – slide valve dist
bomb bay door actuating mechanism; 53 –
main leg bogeys with wheels, 54 – split va
slide valve distributors with hydraulic lock
ing gear main leg actuating cylinders
А – high pressure lines of main and brake
system supply lines, Б – drain lines of ma
hydraulic systems, В – wheel emergency br
gear emergency retraction and bomb bay do
line, Г – landing gear emergency extension
wheel normal (main) brake line between val
sure reducer, Е – wheel normal (main) and
brake (on section from pressure reducer to
supercharging and drainage lines, З – landing gear
retraction, bomb bay door closing and landing gear
leg wheel left turning lines, И – landing gear exten
bomb-bay door opening and landing gear nose leg w
right turning lines, К – wheel emergency brake line
valve to pressure reducer

[redacted]

50X1-HUM

[redacted]

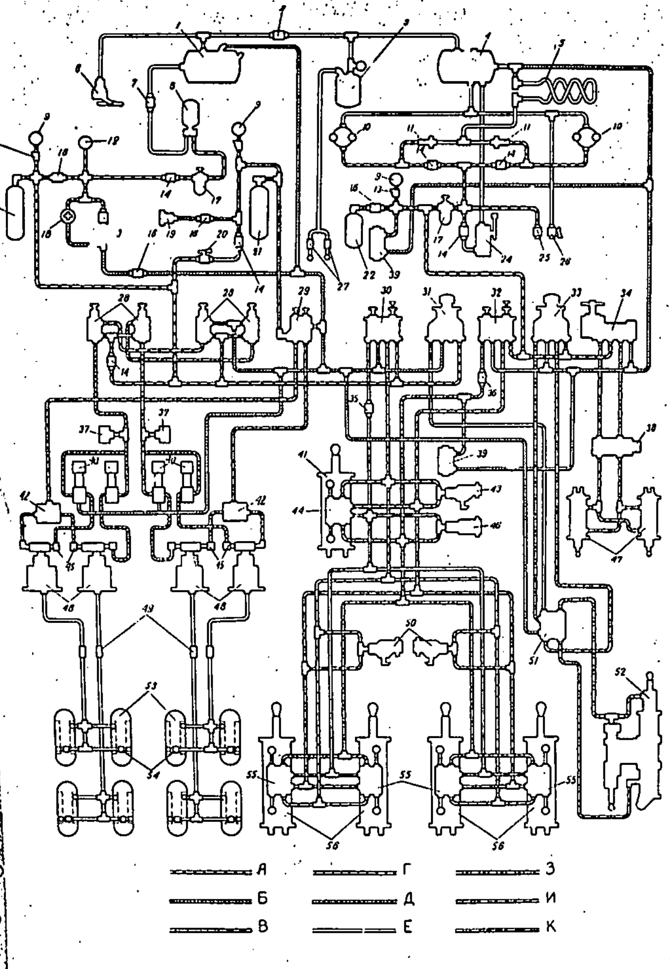

FIG. 96. KEY DIAGRAMS OF MAIN AND BRAKE HYDRAULIC SYSTEMS

1 – brake system tank; 2 – air flow restrictor; 3 – drain tank; 4 – main system tank; 5 – cooler; 6 – drain cock; 7 – elbow split valve; 8 – pumping station (453K); 9 – pressure gauges; 10 – pumps (units 435[illegible]); 11 – constant flow restrictors; 12 – oil pressure switch, type [illegible]; 13 – needle-type throttle valves; 14 – non-return valves; 15 – hydraulic accumulator of wheel normal (main) brake line; 16 – straight split valves; 17 – line filters; 18 – shut-off cock; 19 – pressure drop warning unit, type СПУ-130; 20 – emergency hydraulic accumulator charging cock; 21 – emergency brake line hydraulic accumulator; 22 – main hydraulic system damping hydraulic accumulator; 23 – safety valve; 24 – hand pump; 25 – aircraft supply pipe union with non-return valve; 26 – aircraft supply pipe union with shut-off valve; 27 – non-return valves; 28 – normal (main) brake valves; 29 – emergency brake valves; 30 – landing gear emergency controls; 31 – bomb bay door emergency control; 32 – landing gear normal (main) controls; 33 – bomb bay door normal (main) controls; 34 – landing gear nose leg wheel control panel; 35 – flow restrictor; 36 – throttle valve; 37 – hydraulic switches; 38 – throttle cock; 39 – safety valve; 40 – solenoid-operated slide valve; 41 – landing gear nose leg actuating cylinder; 42 – double cut-out valves; 43 – landing gear nose leg attachment lock; 44 – slide valve distributor; 45 – shuttle valves; 46 – cylinder of landing gear nose leg collapsible strut lock; 47 – landing gear nose leg wheel damping actuating cylinders; 48 – pressure reducers; 49 – valves for connection of reference pressure gauges; 50 – landing g leg attachment locks; 51 – slide valve distributor bomb bay door actuating mechanism; 53 – landing main leg bogeys with wheels; 54 – split valves; slide valve distributors with hydraulic locks; 56 – ing gear main leg actuating cylinders

А – high pressure lines of main and brake hydraul system supply lines; Б – drain lines of main and hydraulic systems; В – wheel emergency brake, l gear emergency retraction and bomb bay door clos line; Г – landing gear emergency extension line, wheel normal (main) brake line between valve and sure reducer; Е – wheel normal (main) and emerg brake (on section from pressure reducer to wheel tubes), supercharging and drainage lines; З – landing gear retraction, bomb bay door closing and landing gear nose leg wheel left turning lines; И – landing gear extension, bomb bay door opening and landing gear main leg wheel right turning lines; К – wheel emergency brake line from valve to pressure reducer

[redacted]

50X1-HUM

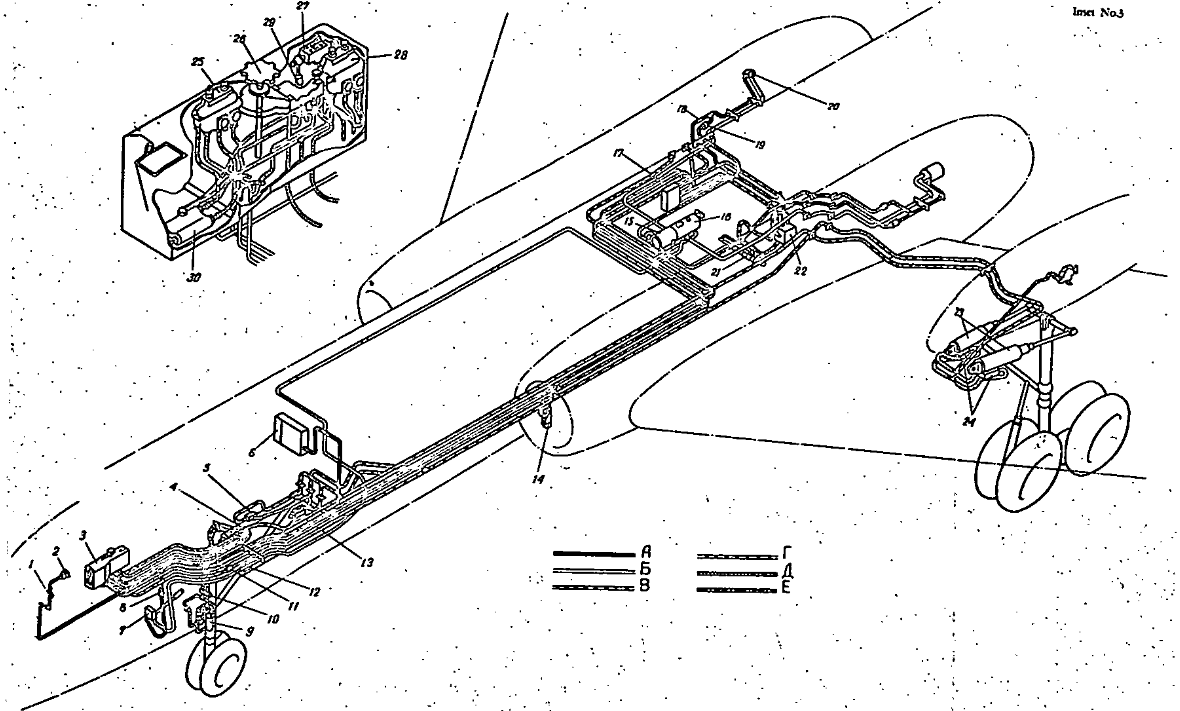

FIG. 97. MAIN HYDRAULIC SYSTEM ARRANGEMENT DIAGRAM

1 – needle-type throttle valve (H5810-870); 2 – pressure gauge (ЧГ - 250); 3 – pilots' central panel (H5504-0); 4 – landing gear nose leg actuating cylinder (H4203-0); 5 – slide valve distributor (H5810-700); 6 – hydraulic system panel (H5605-0) on frame No. 15; 7 – hand pump (HPO-1); 8 – non-return valve (H5810-200); 9 – landing gear nose leg wheel turning control damping actuating cylinders (H4204-0); 10 – throttle cock (H5805-100); 11 – flow restrictor (H5810-810); 12 – actuating cylinder of landing gear nose leg collapsible strut lock (H4202-40); 13 – landing gear nose leg attachment lock (H4105-0); 14 – safety valve (H5810-0); 15 – cooler (H5601-380); 16 – tank (H5502-0); 17 – hydraulic system panel at frame No. 33 (H5505-100); 18 – non-return valve (H5810-210); 19 – constant flow restrictor (H5810-770); 20 – pump (unit 435H4); 21 – bomb-bay door actuating mechanism (H5800-0); 22 – slide valve distributor (H5910-700); 23 – landing gear main leg actuating cylinders (H4103-0); 24 – slide valve distributors with hydraulic lock (H5810-160); 25 – landing gear normal (main) controls (H5855-150M); 26 – landing gear nose leg wheel turning control panel (H5806-0); 27 – hatch door control; 28 – landing gear emergency controls (H5855-150M); 29 – non-return valve (H5810-210); 30 – emergency brake valve (УГ - 39).

А – high-pressure delivery line; Б – low-pressure delivery line; В – landing gear retraction and extension control line; Г – bomb-bay door control line; emergency brake line in pilots' central panel; Д – landing gear nose leg wheel turning control line; Е – return line.

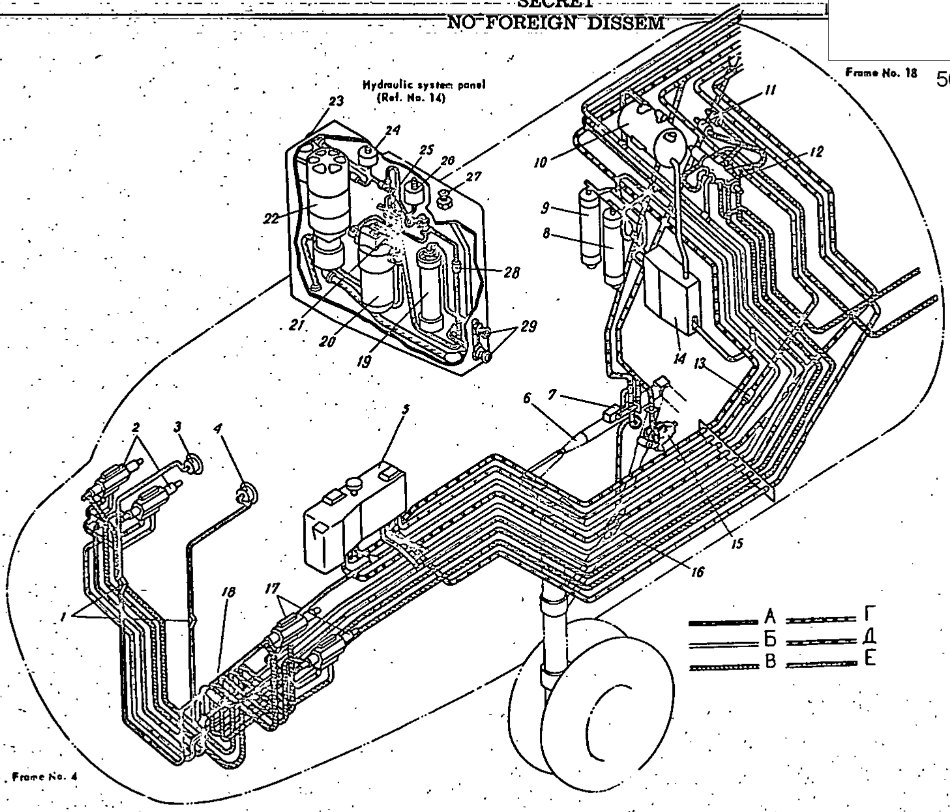

FIG. 98. BRAKE HYDRAULIC SYSTEM ARRANGEMENT DIAGRAM
(BETWEEN FRAMES NOS 4 AND 18)

1 – needle-type throttle valves (H5810-820); 2 – normal (main) brake valves (УГ-92) on starboard side; 3 – emergency brake pressure gauge (МГ-250); 4 – normal (main) brake line pressure gauge (МГ-250); 5 – pilots' control panel (H5804-0); 6 – landing gear nose leg actuating cylinder (H4203-0); 7 – slide valve distributor (H5810-200); 8 – emergency hydraulic accumulator (H5803-0); 9 – main hydraulic accumulator (H5803-0); 10 – brake system tank (H5602-400); 11 – hydraulic switches (УГ-34); 12 – solenoid-operated slide valve (ГА-49); 13 – flow restrictor (H5810-780); 14 – hydraulic system panel (H5606-100) at frame No. 33; 15 – landing gear nose leg attachment lock (H4104-0); 16 – nose leg collapsible strut lock actuating cylinder (H4202-40); 17 – normal (main) brake valves (УГ-92) on port side; 18 – non-return valve (H5810-210); 19 – main hydraulic system damping hydraulic accumulator (H5803-50); 20 – line filter (H5812-50); 21 – non-return valve (H5810-210); 22 – pumping station (465к); 23 – straight valve (665000Б) in places of pipe joints; 24 – emergency hydraulic accumulator pressure drop warning unit (СПМ-130); 25 – shut-off cock (H5810-254); 26 – oil pressure switch (ПДМ-150); 27 – elbow split valve (665005); 28 – safety valve (H5810-25); 29 – straight split valves (665000Б).
А – high-pressure delivery line; Б – low-pressure delivery line; В – wheel normal (main) brake line; Г – wheel emergency brake line; Д – landing gear emergency retraction and extension line; Е – return line.

Inset [redacted]

50X1-HUM

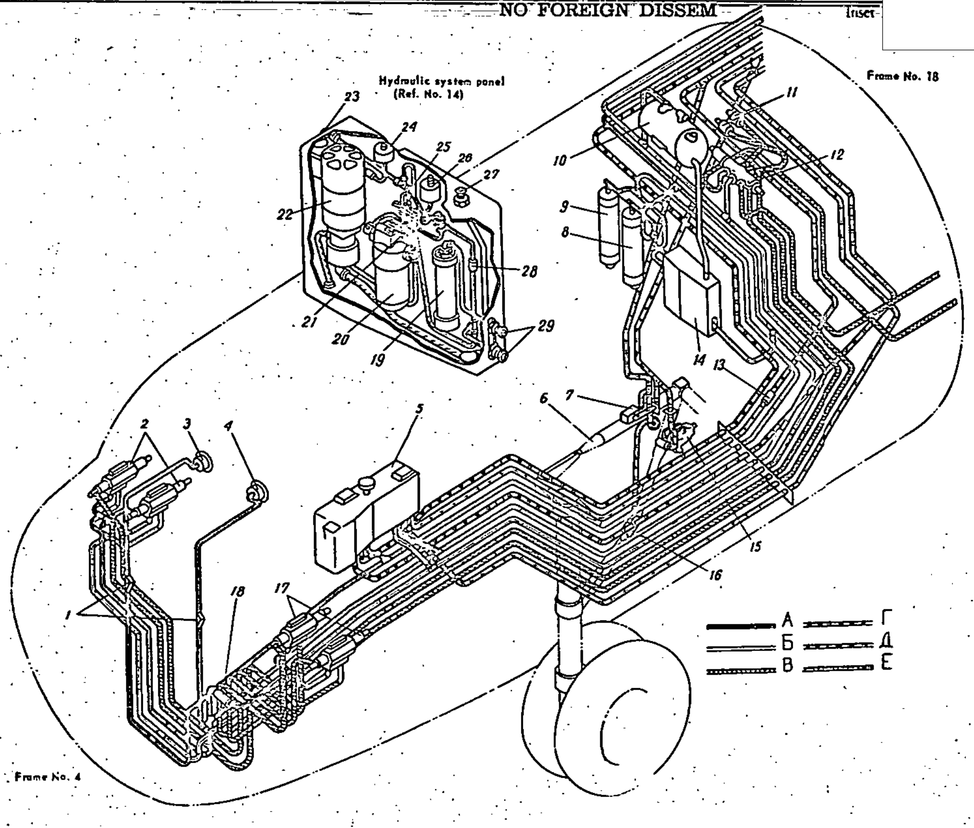

FIG. 98. BRAKE HYDRAULIC SYSTEM ARRANGEMENT DIAGRAM
(BETWEEN FRAMES NOS 4 AND 18)

1 – needle-type throttle valves (H5810-820); 2 – normal (main) brake valves (УГ-92) on starboard side; 3 – emergency brake pressure gauge (МГ-250); 4 – normal (main) brake line pressure gauge (МГ-250); 5 – pilots' control panel (H5904-0); 6 – landing gear nose leg actuating cylinder (H4203-0); 7 – slide valve distributor (H5810-200); 8 – emergency hydraulic accumulator (H5803-0); 9 – main hydraulic accumulator (H5803-0); 10 – brake system tank (H5602-400); 11 – hydraulic switches (УГ-34); 12 – solenoid-operated slide valve (ГА-49); 13 – flow restrictor (H5810-780); 14 – hydraulic system panel (H5606-100) at frame No. 33; 15 – landing gear nose leg attachment lock (H4106-0); 16 – nose leg collapsible strut lock actuating cylinder (H4202-40); 17 – normal (main) brake valves (УГ-92) on port side; 18 – non-return valve (H5810-210); 19 – main hydraulic system damping hydraulic accumulator (H5803-50); 20 – line filter (H5812-50); 21 – non-return valve (H5810-210); 22 – pumping station (465н); 23 – straight valve (665000Б) in places of pipe joints; 24 – emergency hydraulic accumulator pressure drop warning unit (СПМ-130); 25 – shut-off cock (H5810-254); 26 – oil pressure switch (ПДМ3-150); 27 – elbow split valve (665000Б); 28 – safety valve (H5810-25); 29 – straight split valves (665000Б).

А – high-pressure delivery line; Б – low-pressure delivery line; В – wheel normal (main) brake line; Г – wheel emergency brake line; Д – landing gear emergency retraction and extension line; Е – return line.

[redacted]

50X1-HUM

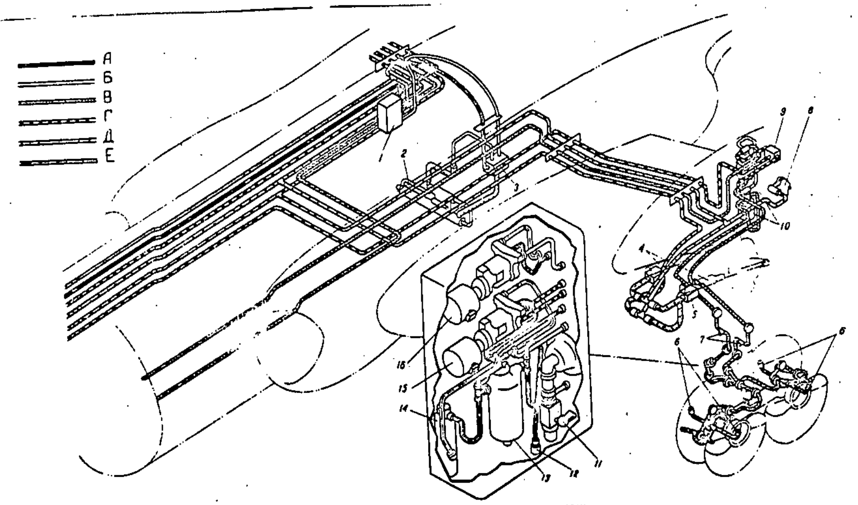

FIG. 99. BRAKE HYDRAULIC SYSTEM ARRANGEMENT DIAGRAM (BETWEEN FRAME No. 18 AND LANDING GEAR MAIN LEG)

1 – hydraulic system panel (H5606-100) located at frame No. 33; 2 – bomb-bay door actuating mechanism (H5800-0); 3 – slide valve distributor (H5810-700); 4 – landing gear main leg actuating cylinders (H4103-0); 5 – slide valve distributor with hydraulic lock (H5810-160); 6 – outside brakes split valves (H4100-241); 7 – screw-in valves for connecting reference pressure gauge (H4100-205); 8 – landing gear main leg attachment lock (H4106-0); 9 – double cut-out valves (У228-2), 10 – pressure reducers (H5601-96); 11 – aircraft supply pipe union with shut-off valve (H5810-50); 12 – aircraft supply pipe union with non-return valve (H5810-125); 13 – line filter (H5812-50); 14 – safety valve (H5810-0); 15 – bomb-bay door normal (main) control (H5855-100); 16 – bomb-bay door auxiliary closing line control (H5855-100).
A – high-pressure delivery lines; Б – bomb-bay door auxiliary closing line; B – wheel normal (main) brake line; Г – emergency brake line; bomb-bay door main control line in panel; Д – landing gear emergency retraction and extension line; E – return line.

[redacted]

50X1-HUM

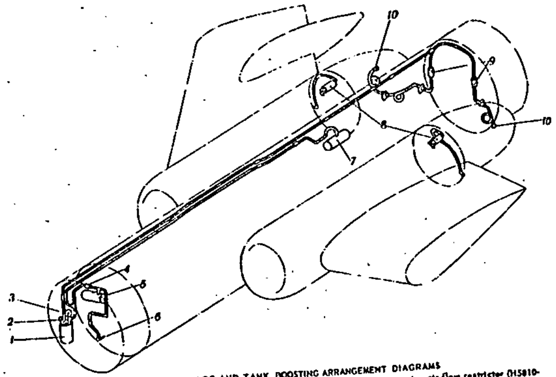

FIG. 100. PUMP DRAINAGE AND TANK BOOSTING ARRANGEMENT DIAGRAMS

1 – drain tank (H5602-100); 2 – pressure regulator (H5810-700); 3 – pressure gauge; 4 – air flow restrictor (H5810-250); 5 – brake hydraulic system tank (H5602-400); 6 – drain valve (H5810-400); 7 – main hydraulic system tank (H5602-0); 8 – pump (unit 435ВР); 9 – non-return valve (H5810-270); 10 – air intake flange.

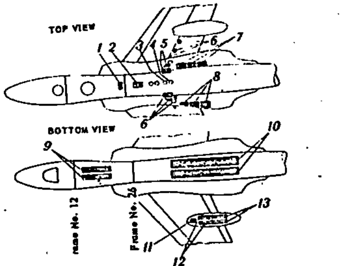

FIG. 101. ARRANGEMENT OF ACCESS HATCHES FOR INSPECTING HYDRAULIC SYSTEM UNITS AND PIPE LINES

1 – hatch between frames Nos 12 and 26; 2 – hatch above centre plane; 3 – inspection hole of main hydraulic system tank oil gauge; 4 – hatch over filler of main hydraulic system tank; 5 – panels above engine air intake duct; 6 – hatches on wing middle part; 7 – engine cowl inner front shutters; 8 – engine cowl outer front shutters; 9 – landing gear nose leg well doors; 10 – bomb-bay doors; 11 – hatch on landing gear fairing nose section; 12 – landing gear main leg front doors; 13 – landing gear main leg rear doors.

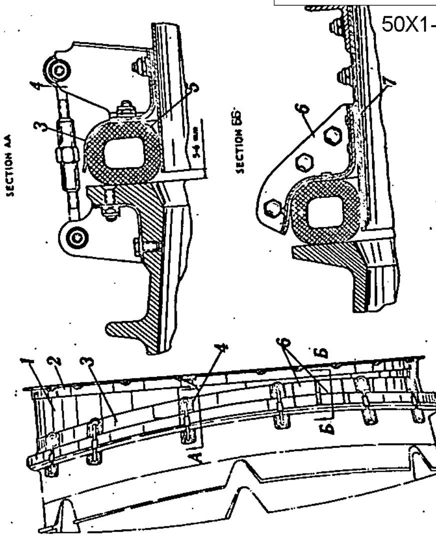

FIG. 103. RING JOINING AIR INTAKE DUCT TO ENGINE COMPRESSOR HOUSING

1 – air intake duct; 2 – air intake duct front flange; 3 – air intake duct rear flange; 4 – turnbuckle [redacted] ber gasket; 6 – fitting; 7 – strap.

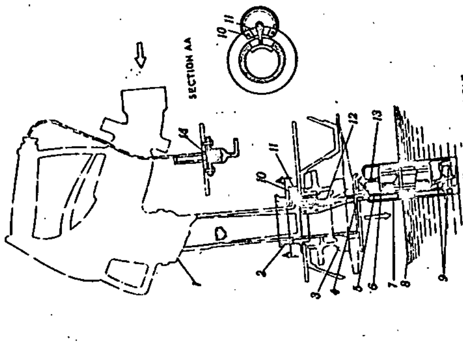

FIG. 102. FUEL TANK FLOAT

1 – fuel dispensing gun; 2 – tank shell; 3 – filler body; 4 – rest for fuel dispensing gun; 5 – rod; 6 – float; 7 – cylinder; 8 – fuel level; 9 – leverage; 10 – pointer; 11 – scale; 12 – connecting bracket; 13 – guiding rod; 14 – socket for grounding fuel dispensing gun.

[redacted]

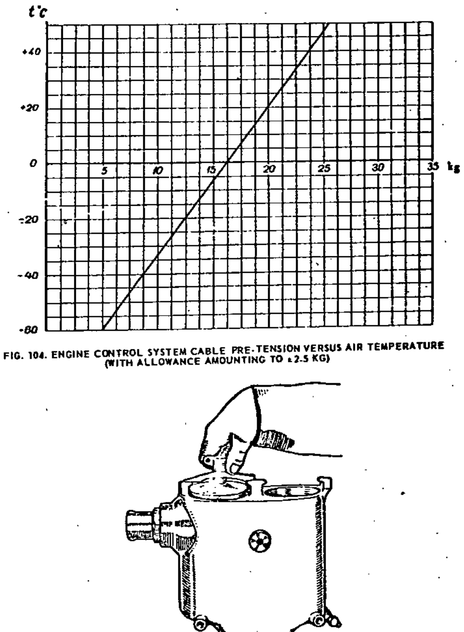

FIG. 104. ENGINE CONTROL SYSTEM CABLE PRE-TENSION VERSUS AIR TEMPERATURE (WITH ALLOWANCE AMOUNTING TO ±2.5 KG)

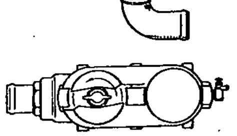

FIG. 105. FINE FUEL FILTER (REMOVING COVER WITH FILTERING ASSEMBLY)

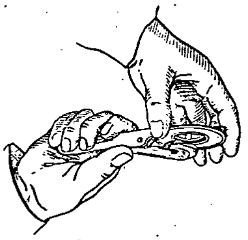

FIG. 106. TONGS FOR WASHING FILTERING ELEMENTS

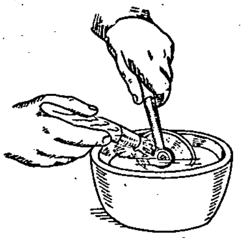

FIG. 107. WASHING FILTERING ELEMENT AND CLEANING IT WITH HAIR BRUSH

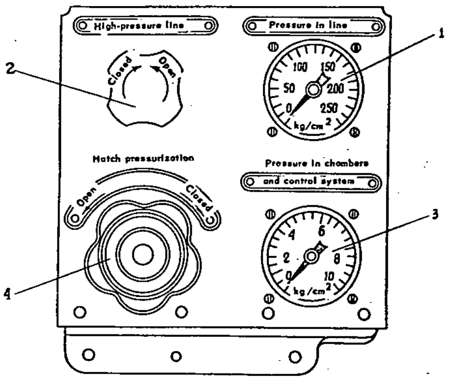

FIG. 108. RIGHT PILOT AIR PANEL

1 – air pressure gauge МВ-250ш; 2 – cock of reducer H 7610-10; 3 – air pressure gauge МВ-10ш; 4 – hatch pressurization system shut-off cock.

[redacted]

50X1-HUM

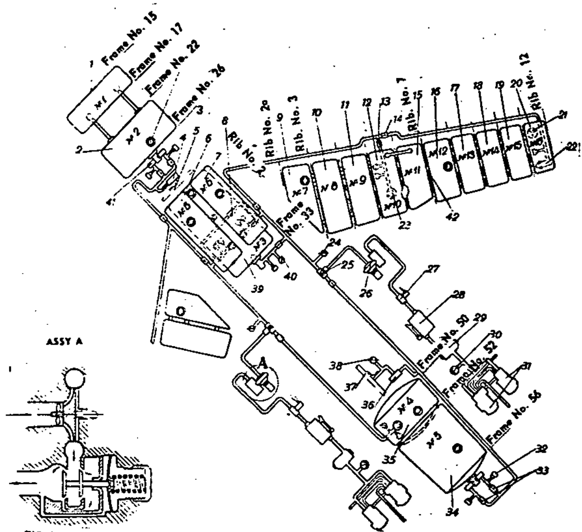

FIG. 109. KEY DIAGRAM OF ENGINE MAIN FUEL SYSTEM (UNITS AND PIPE LINES ARRANGED IN FUSELAGE AND RIGHT WING)

1 – tank No.1; 2 – tank No.2; 3 – filler; 4 – cock for jettisoning fuel from tanks Nos 1 and 2; 5 – pipe for filling system with fuel; 6 – tank No.6 (left); 7 – tank No.6 (right); 8 – engine cross-feed valve; 9 – tank No.7; 10 – tank No.8; 11 – tank No.9; 12 – tank No.10; 13 – non-return valve of tank group III; 14 – non-return valve of tank group IV; 15 – tank No.11; 16 – tank No.12; 17 – tank No.13; 18 – tank No.14; 19 – tank No.15; 20 – tank No.16; 21 – fuel jettison valve; 22 – aircraft fuel booster pump ЭЦН-Т (unit 461) of tank group IV; 23 – aircraft fuel booster pump ЭЦН-Т (unit 461) of tank group III; 24 – drain cock; 25 – fuel shut-off cock; 26 – engine fuel booster pump ЦН-1 (unit 453); 27 – fuel flow meter transmitter PTC-16; 28 – fuel cooled oil cooler (unit 62); 29 – main fine fuel filter; 30 – electric pressure gauge transmitter ЭДМУ-3 measuring fuel pressure upstream of pumps ПН-28ЭИ and ПН-15ЭИ; 31 – pumps ПН-28ЭИ and ПН-15ЭИ; 32 – fuel pressure warning unit СД-3ТУ; 33 – non-return valves of tank No. 5; 34 – tank No. 5; 35 – tank No. 4; 36 – cock for jettisoning fuel from tank No. 5; 37 – pipe for filling system with fuel; 38 – drain cock; 39 – tank No. 3; 40 – drain cock; 41 – aircraft fuel booster pump ЭЦН-Т of tank No. 2; 42 – fuel jettison valve.

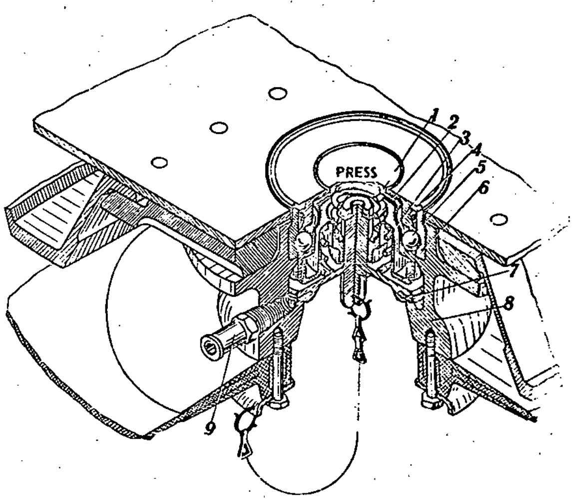

FIG. 110. FILLER WITH QUICK-RELEASE PLUG

1 – push-button; 2 – push-button spring; 3 – plug spring; 4 – plug; 5 – locking ball; 6 – plug body; 7 – valve with gasket; 8 – filler body; 9 – pipe union for draining condensate and excess fuel.

[redacted]

50X1-HUM

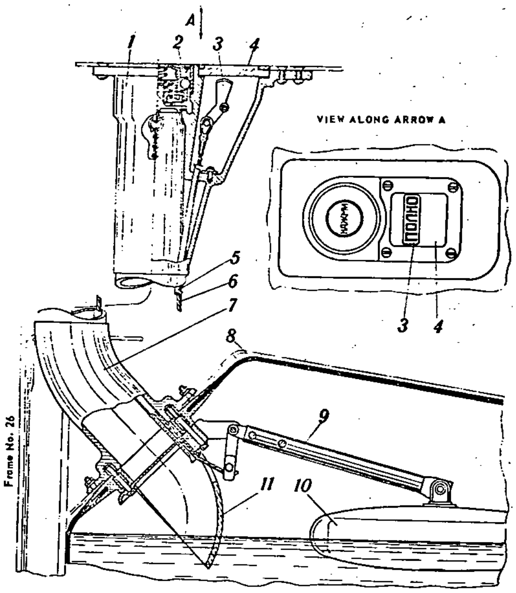

FIG. 111. FILLER OF TANK No. 3 WITH FUEL LEVEL INDICATOR
1 – filler body; 2 – quick-release plug; 3 – rocker with inscription FULL (ПОЛНО); 4 – peep hole; 5 – pipe; 6 – cable; 7 – branch pipe; 8 – tank No. 3; 9 – lever; 10 – float; 11 – baffle.

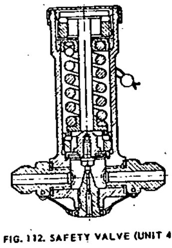

FIG. 112. SAFETY VALVE (UNIT 438)

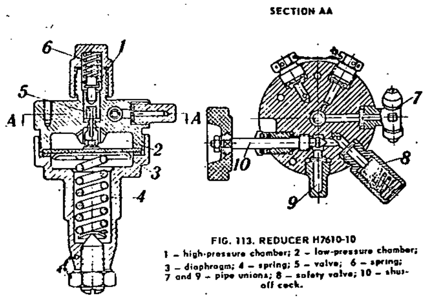

FIG. 113. REDUCER H7610-10
1 – high-pressure chamber; 2 – low-pressure chamber; 3 – diaphragm; 4 – spring; 5 – valve; 6 – spring; 7 and 9 – pipe unions; 8 – safety valve; 10 – shut-off cock.

[redacted]

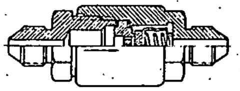

FIG. 114. NON-RETURN VALVE 998A4

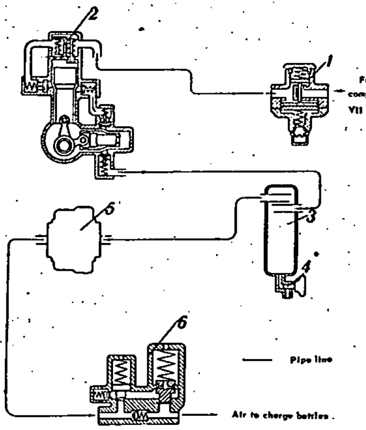

FIG. 115. CHARGING AIR SYSTEM BOTTLES FROM COMPRESSOR AK-150H
1 – low-pressure reducer (unit 436); 2 – compressor AK-150H (unit 380); 3 – oil sump H6151-100; 4 – shut-off cock; 5 – filter (unit 442); 6 – pressure control unit АДУ-2 (unit 208Д).

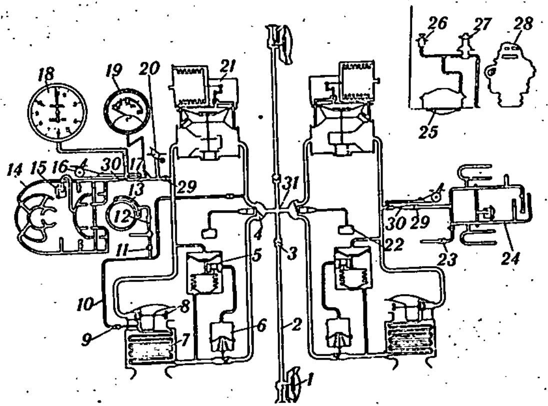

FIG. 116. PRESSURIZATION, HEATING AND VENTILATION OF PRESSURIZED COCKPITS. KEY DIAGRAM
1 – shut-off valve; 2 – pipe line; 3 – non-return valve; 4 – supply valve; 5 – ТХУ turbo-cooler expansion regulator; 6 – ТХУ turbo-cooler flow restrictor mechanism; 7 – air cooler; 8 – ТХУ turbo-cooler ventilator; 9 – non-return valve; 10 – blister heating air delivery pipe line; 11 – shut-off cock; 12 – ejector; 13 – blister heating manifold; 14 – pipe line supplying air for heating navigator's canopy; 15 – electric heater (item 107); 16 – control lever of РПВ air delivery regulator; 17 – РПВ air delivery regulator; 18 – РВУ-46У air flow meter; 19 – ТУЭ-48 electric thermometer indicator; 20 – atmospheric air intake; 21 – PKH pressurization system reducing valve; 22 – ТРТВК-45М air temperature regulator (thermostat); 23 – cockpit ventilation system non-return valve; 24 – pipe line supplying air to rear cockpit; 25 – ККД combination valve; 26 – emergency pressure release valve; 27 – control valve of ККД combination valve; 28 – АРД-54 automatic pressure regulator; 29 – non-return valve; 30 – Venturi tube; 31 – cross-piece.

[redacted]

50X1-HUM

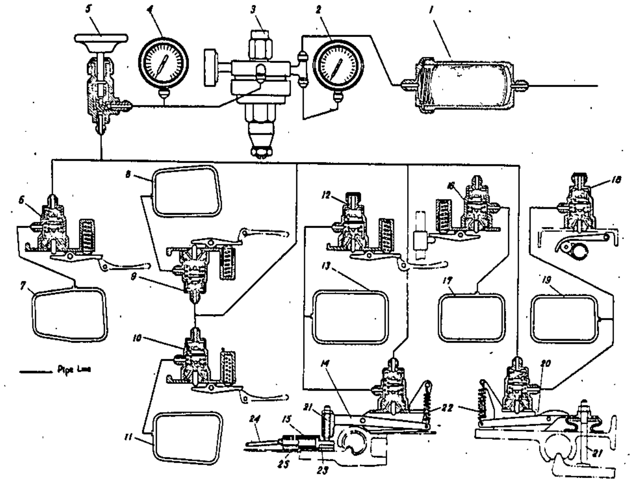

FIG. 117. HATCH PRESSURIZATION. KEY DIAGRAM

1 – desiccator; 2 – high-pressure gauge, type MB-250-м:3 – reducer; 4 – low-pressure gauge, type MB-10-м;5 – hatch pressurization cock; 6 – navigator's hatch pressurization two-way cock; 7 – navigator's hatch sealing hose; 8 – right pilot's hatch sealing hose; 9 – right pilot's hatch two-way cock; 10 – left pilot's hatch two-way cock; 11 – left pilot's hatch sealing hose; 12 – operator's hatch two-way cock; 13 – operator's hatch sealing hose; 14 – lever for releasing pressure from hose during parking; 15 – mechanism for releasing pressure from hoses during parking; 16 – radio operator's hatch pressurization two-way cock; 17 – radio operator's hatch sealing hose; 18 – gunner's hatch two-way cock; 19 – gunner's hatch sealing hose; 20 – lever for releasing pressure from hose during parking; 21 – rod for interlocking valve with hatch; 22 – springs; 23 – rod; 24 – pull-out ring; 25 – spring.

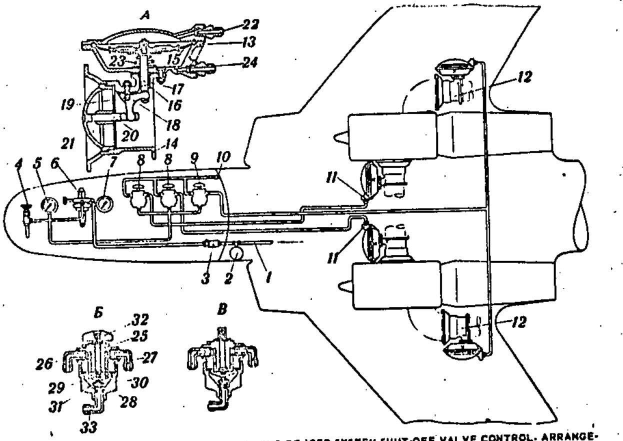

FIG. 118. COCKPIT PRESSURIZATION AND WING DE-ICER SYSTEM SHUT-OFF VALVE CONTROL. ARRANGEMENT DIAGRAM

1 – pipe line; 2 – cylinder; 3 – desiccator; 4 – hatch pressurization system control cock; 5 – low-pressure gauge; 6 – reducer; 7 – high-pressure gauge; 8 – cockpit pressurization system slide valves; 9 – wing de-icer system slide valve; 10 – drain pipe union; 11 – cockpit pressurization system shut-off cocks; 12 – wing de-icer system shut-off cocks; 13 – lower cover; 14 – shut-off cock body; 15 – diaphragm; 16 – rod; 17 – bush; 18 – lever; 19 – lever axle; 20 – valve rod; 21 – valve; 22 – inlet pipe union; 23 – spring; 24 – drain pipe union; 25 – slide valve body; 26 and 27 – screw-in angles; 28 – step bearing; 29 – slide valve; 30 – spring; 31 – ball; 32 – knob; 33 – screw-in angle; A – shut-off valve (Ref. Nos 11 and 12); Б – slide valve (Ref. Nos 8 and 9) in position at which shut-off valve A is open; B – slide valve (Ref. Nos 8 and 9) in position at which shut-off valve A is closed.

[redacted]

50X1-HUM

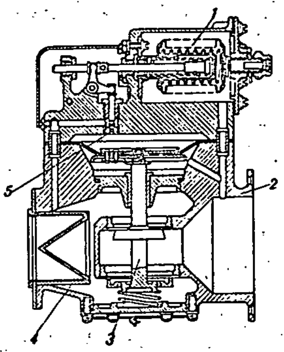

FIG. 119. PRESSURIZATION REDUCING VALVE (PKH)
1 – silphon; 2 – body; 3 – reducing valve; 4 – filter; 5 – jet.

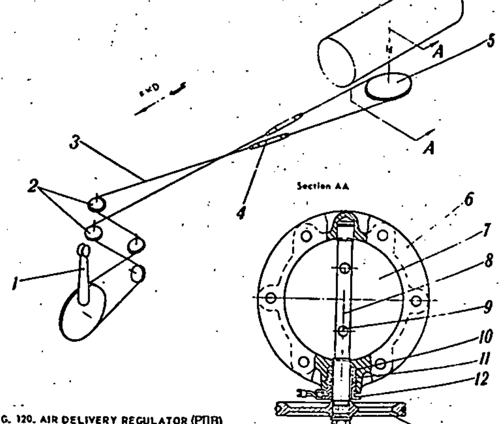

FIG. 120. AIR DELIVERY REGULATOR (PПB)
1 – control lever; 2 – sheaves; 3 – cable; 4 – turnbuckle; 5 – sheave; 6 – valve body; 7 – butterfly valve; 8 – axle; 9 – rivet; 10 – gland; 11 – ring; 12 – nut; 13 – sheave; 14 – nut.

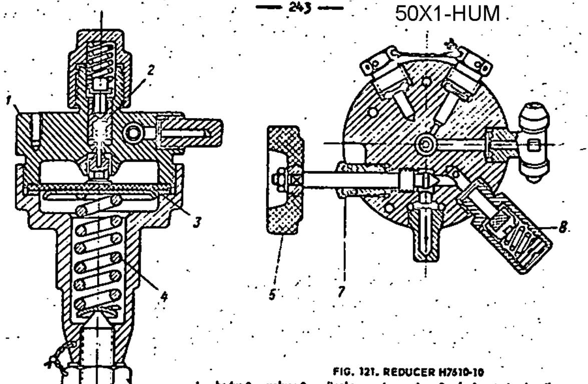

FIG. 121. REDUCER H7610-10
1 – body; 2 – valve; 3 – diaphragm; 4 – spring; 5 – lock nut; 6 – handle; 7 – gland; 8 – safety valve.

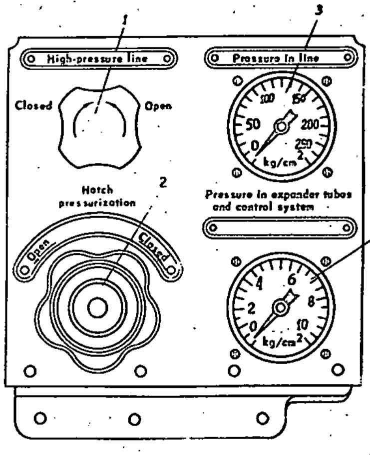

FIG. 122. HATCH PRESSURIZATION PANEL
1 – knob of reducer H7610-10; 2 – hatch pressurization cock; 3 – high-pressure gauge, type MB-250-15; 4 – low-pressure gauge, type MB-10a.

[redacted]

50X1-HUM

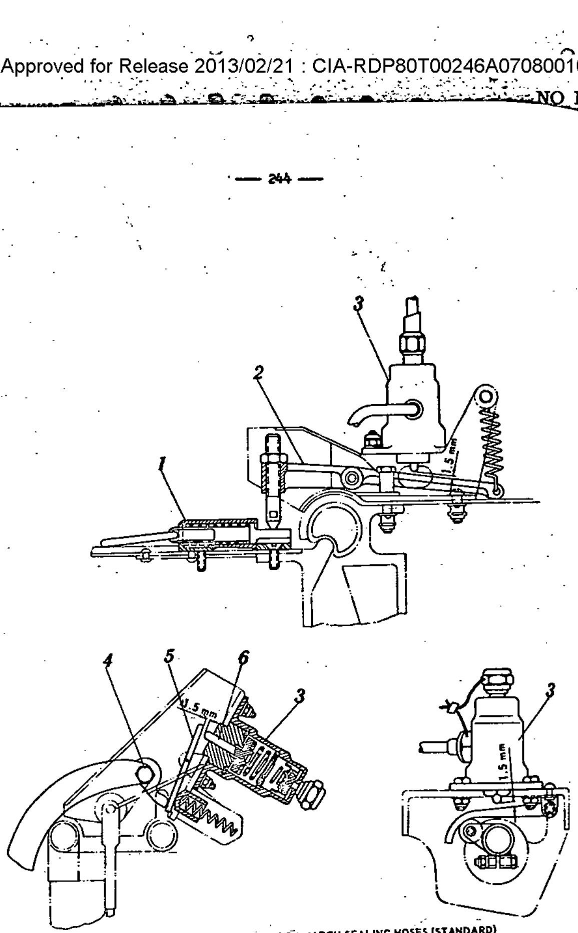

FIG. 123. MECHANISM FOR RELEASING PRESSURE FROM HATCH SEALING HOSES (STANDARD)
1 – lock; 2 – interlocking lever; 3 – two-way cock; 4 – interlocking lever; 5 – pressure lever for releasing pressure from hoses; 6 – pressurization valve rod.

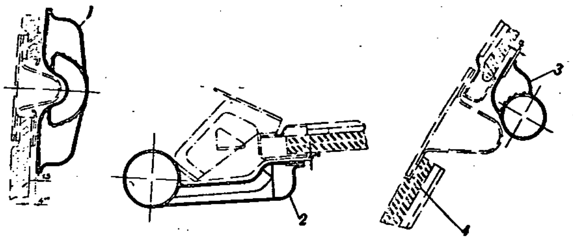

FIG. 124. OUTLET SLOTS IN BRANCH PIPES AND CLEARANCES BETWEEN BRANCH PIPES AND PILOTS' CANOPY GLASS
1 – branch pipe on cover; 2 – branch pipe on front glass; 3 – branch pipe on side glass; 4 – glass.

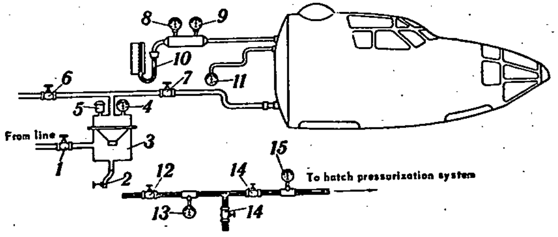

FIG. 125. STAND FOR TESTING COCKPITS FOR LEAKAGE. SCHEMATIC DIAGRAM
1 – straight-way cock; 2 – drain cock; 3 – filter; 4 – pressure gauge for 10 kg/sq.cm.; 5 – safety valve; 6 – cockpit pressure release cock; 7 – straight-way cock; 8 – climb-and-descent indicator; 9 – pressure gauge for 1.5 kg/sq.cm.; 10 – mercury pressure gauge; 11 – reference pressure gauge; 12 – reducer; 13 – pressure gauge for 10 kg/sq.cm.; 14 – KB-5 cock; 15 – pressure gauge for 10 kg/sq.cm.

[redacted]

50X1-HUM

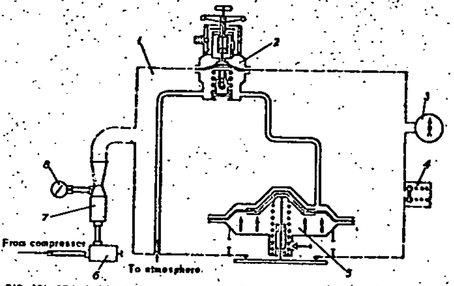

FIG. 126. STAND FOR CALIBRATION OF KKД COMBINATION PRESSURE VALVE TOGETHER WITH ITS CONTROL VALVE. SCHEMATIC DIAGRAM

1 – sealed reservoir; 2 – control valve; 3 – pressure gauge; 4 – reservoir safety valve; 5 – KKД combination pressure valve; 6 – shut-off cock; 7 – Venturi tube; 8 – air flow meter.

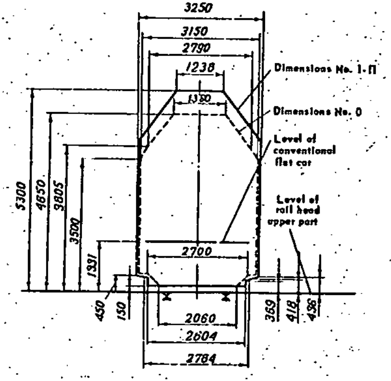

FIG. 127. OVERALL DIMENSIONS AND SHAPE OF ITEMS TO BE TRANSPORTED BY ROLLING STOCK

No. 1-II – overall dimensions and shape of items allowed for handling throughout the railway network; No. 0 – overall dimensions and shape of items allowed for handling on international through railway lines.

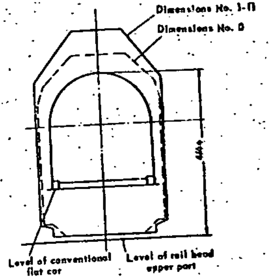

FIG. 128. DIMENSIONS AND SHAPE OF PACKED FRONT PRESSURIZED COCKPIT AS RELATED TO DIMENSIONS OF RAILWAY CAR

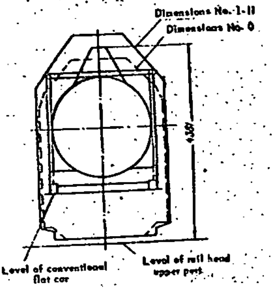

FIG. 130. DIMENSIONS AND SHAPE OF PACKED FUSELAGE TAIL SECTION AS RELATED TO DIMENSIONS OF RAILWAY CAR

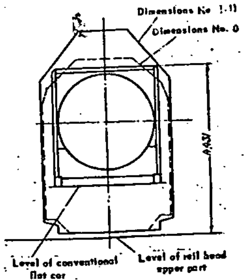

FIG. 129. DIMENSIONS AND SHAPE OF PACKED FUSELAGE NOSE SECTION AS RELATED TO DIMENSIONS OF RAILWAY CAR

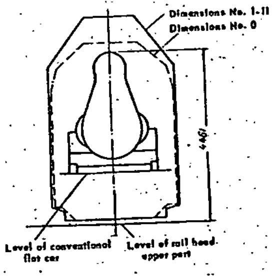

FIG. 131. DIMENSIONS AND SHAPE OF PACKED REAR PRESSURIZED COCKPIT AS RELATED TO DIMENSIONS OF RAILWAY CAR

[redacted]

50X1-HUM

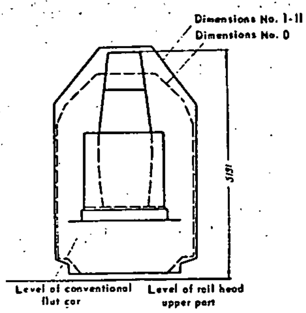

FIG 132. DIMENSIONS AND SHAPE OF PACKED FIRST DETACHABLE WING PART AS RELATED TO DIMENSIONS OF RAILWAY CAR

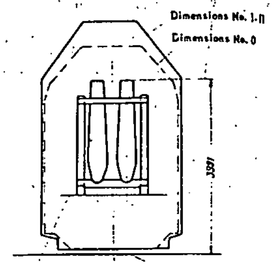

FIG. 133. DIMENSIONS AND SHAPE OF PACKED SECOND DETACHABLE WING PART AS RELATED TO DIMENSIONS OF RAILWAY CAR

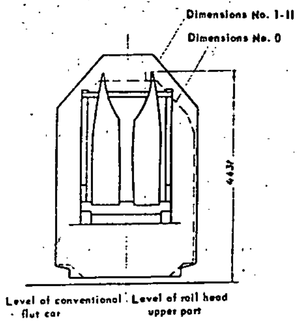

FIG. 134. DIMENSIONS AND SHAPE OF PACKED STABILIZER AS RELATED TO DIMENSIONS OF RAILWAY CAR

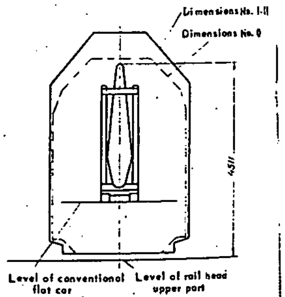

FIG. 135. DIMENSIONS AND SHAPE OF PACKED FIN AS RELATED TO DIMENSIONS OF RAILWAY CAR

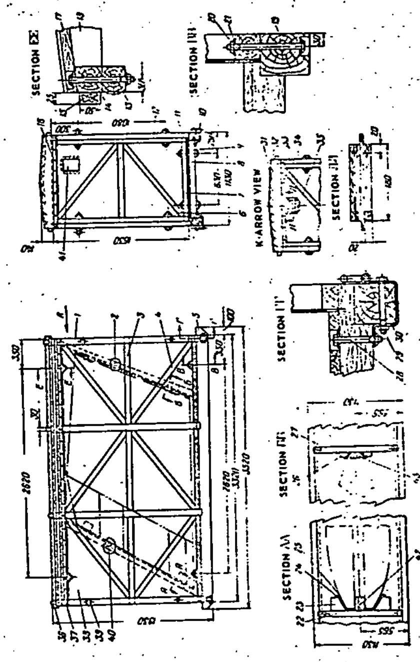

FIG. 136. CONTAINER FOR PACKING FLAP OF FIRST DETACHABLE WING PART

[redacted]

50X1-HUM

Ref. No.	Description	Quantity	Material	Size, mm
1	2	3	4	5
1	Bars	8	Pinewood	60x60x1650
2	Same	2	Same	60x60x1800
3	Same	6	Same	60x60x3320
4	Braces	12	Same	40x40x1290
5	Bars	2	Same	100x120x3520
6	Same	4	Same	40x40x1170
7	Same	6	Same	60x60x1002
8	Same	4	Same	60x90x1130
9	Floor (shield)	1	Same	20x1002x3320
10	Shackles	4	St.3 (x 16)	L = 248
11	Bars	4	Pinewood	60x60x1630
12	End face walls	2	Veneer	4x1002x1630
13	Bolts	8	St.5	M12x1.75; L = 140
14	Bars	2	Pinewood	60x67x3520
15	Same	2	Same	25x50x3320
16	Nails	-	State Standard ГОСТ 4028-48	1.4x20; 2.5x50; 3x70
17	Top (shield)	1	Pinewood	20x1130x3370
18	Bars	4	Same	60x120x1130
19	Bolts	8	St.5 (s 22)	M12x1.75; L = 180
20	Nuts	28	St.5 (s 22)	M12x1.75; L = 10
21	Washers	40	Steel 10 (л 2 mm)	12x35
22	Support	1	Pinewood	60x100x882
23	Bosses	2	Pinewood	100x160x200
24	Covering	1	Commercial felt (δ = 10 mm) State Standard ГОСТ 6418-52	0.75 sq.m.
25	Same	1	Sackcloth	1 sq.m.
26	Bosses	2	Pinewood	60x100x120
27	Support	1	Same	60x100x882
28	Bolts	4	St.5 (s 22)	M12x1.75; L = 100
29	Same	4	St.5 (s 22)	M12x1.75; L = 130
30	Clamps	4	St.3 (л 6)	50x325
31	Tar paper	1	State Standard ГОСТ 1887-51	17.7 sq.m.
32	Ruberoid	1	State Standard ГОСТ 2165-51	5.3 sq.m.
33	Blocks	2	Pinewood	20x20x1100
34	Same	2	Same	20x20x180
1	2	3	4	5
35	Gate	1	Veneer	4x145x145
36	Planks	8	Pinewood	10x30x575
37	Same	2	Veneer	4x30x17000
33	Side walls	2	Same	4x1670x3320
39	Eye bolts	4	St.3 (x 12)	M12x1.75; L = 265
40	Bars	2	Pinewood	60x60x1930
41	Vent	1	Steel 10 (л 0.6)	240x324
42	Boss	1	Pinewood	80x100x160
43	Same	1	Same	60x80x100

<u>Note</u>: Designations in brackets in the column "Material" in Figures 136 through 161 stand for:

x - round;

s - hexahedral;

sx - hexahedral calibrated;

л - sheet.

[redacted]

50X1-HUM

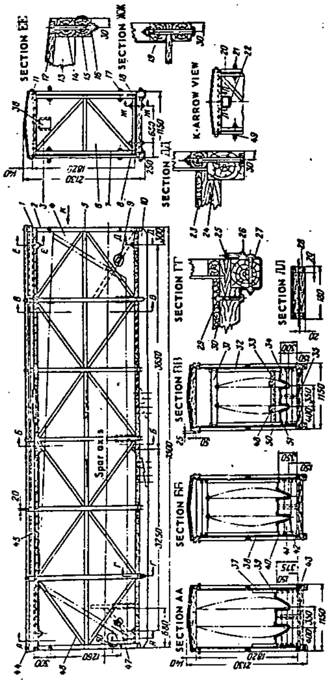

FIG. 137. CONTAINER FOR PACKING FLAP OF SECOND DETACHABLE WING PART

Ref. No.	Description	Quantity	Material	Size, mm
1	2	3	4	5
1	Plank	1	Veneer (δ = 4 mm)	20x88,000
2	Blocks	14	Pinewood	60x60x1840
3	Same	4	Same	40x40x1240
4	Walls	2	Veneer (δ = 4 mm)	1860x7500
5	Bars	6	Pinewood	60x60x7500
6	Walls	2	Veneer (δ = 4 mm)	1022x1820
7	Blocks	4	Pinewood	60x60x1820
8	Same	6	Same	60x60x1020
9	Same	4	Same	60x60x1390
10	Same	2	Same	100x120x7500
11	Ruberoid	1	State Standard ГОСТ 2165-51	11 sq.m.
12	Boards	12	Pinewood	20x100x7550
13	Bars	7	Pinewood	60x120x1150
14	Same	2	Same	60x60x7500
15	Bolts	6	Steel 45 (ms 22)	M12x1.75 L = 200
16	Washers	32	St.5 (s 30)	28x14
17	Bolts	10	St.5 (s 22)	M12x1.75 L = 140
18	Boards	10	Pinewood	20x110x7500
19	Bolts	4	Steel 45 (ms 22)	M12x1.75; L = 180
20	Planks	2	Pinewood	20x25x140
21	Eye bolts	2	St.3 (s 12)	L = 182
22	Gets	1	Veneer (δ = 4 mm)	145x149
23	Boards	10	Pinewood	20x110x7500
24	Bolts	6	St.5 (ms 22)	M12x1.75; L = 200
25	Rings	4	St.3 (s 16)	L = 248
26	Clasps	4	St.3 (s 6)	50x344.5
27	Bolts	4	St.5 (ms 22)	M12x1.75; L = 140
28	Planks	2	Pinewood	20x20x180
29	Nuts	24	St.5 (ms 22)	M12x1.75; L = 10
30	Bolts	4	St.5 (ms 22)	M12x1.75; L = 100
31	Supports	2	Pinewood	30x100x1022
32	Bars	2	Same	60x60x1560
33	Block	1	Same	60x60x1022
34	Boards	6	Same	20x100x1022
35	Bars	7	Same	60x70x1150
36	Vent	1	Roofing iron (δ = 0.6 mm)	240x324
37	Bars	2	Pinewood	60x60x800
38	Same	2	Same	60x60x1730
39	Covering	1	Commercial felt State Standard ГОСТ 6418-52	1 sq.m.

[redacted]

1	2	3	4	5
40	Nails		State Standard ГОСТ 4028-48	2.5x50; 1/4x20; 3x70
41	Boards	6	Pinewood	20x120x1022
42	Covering	1	Sackcloth	1 sq.m.
43	Boards	8	Pinewood	20x100x1022
44	Planks		Veneer (δ = 4 mm)	20x88,000
45	Boards	2	Pinewood	25x50x5020
46	Bars	24	Pinewood	40x40x1440
47	Bars	2	Same	60x60x850
48	Stops	2	Same	50x60x90
49	Washers	4	St.5 (x 35)	34x13
50	Tar paper	1	State Standard ГОСТ 1887-51	39 sq.m.
51	Gaskets	3	Veneer	4x150x1650

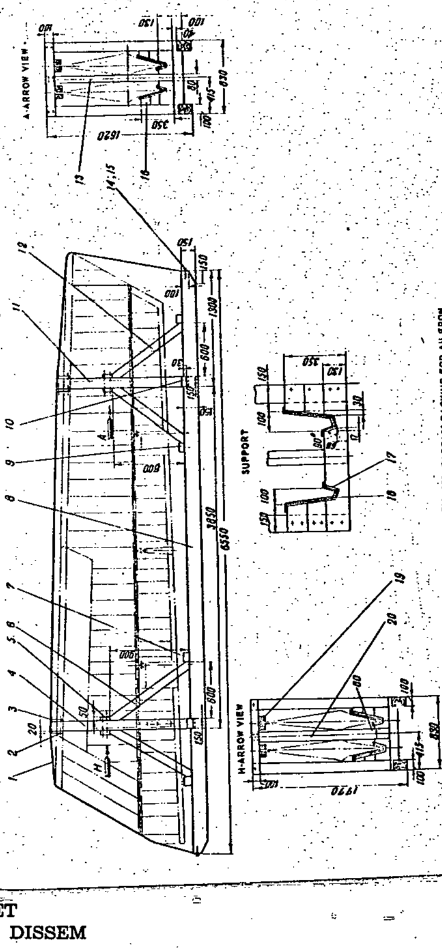

FIG. 138. CARCASS PACKING FOR AILERON

[redacted]

50X1-HUM

Ref. No.	Description	Quantity	Material	Size, mm
1	Cover	1	Canvas, type АПЛ-1, article 383 State Standard ГОСТ 351-41	
2	Boards	4	Pinewood	20x100x830
3	Nails	–	State Standard ГОСТ 4028-48	4x100
4	Blocks	2	Pinewood	100x150x1650
5	Same	8	Same	50x100x100
6	Braces	4	Same	80x100x1100
7	Blocks	4	Same	60x80x100
8	Same	2	Same	100x150xf550
9	Same	2	Same	60x80x830
10	Same	2	Same	100x100x830
11	Same	2	Same	100x150x1500
12	Braces	4	Same	80x100x1000
13	Stand	1	Same	80x100x1430
14	Nails	–	State Standard ГОСТ 4028-48	2x40
15	Plank	1	Veneer	5x30x15,000
16	Supports	2	Pinewood	20x350x830
17	Covering		Commercial felt (δ = 10 mm) State Standard ГОСТ 6418-52	80xL to fit the place of installation
18	Walls	2	Veneer	2x180x40
19	Blocks	8	Pinewood	80x80x200
20	Stand	1	Same	80x150x1580

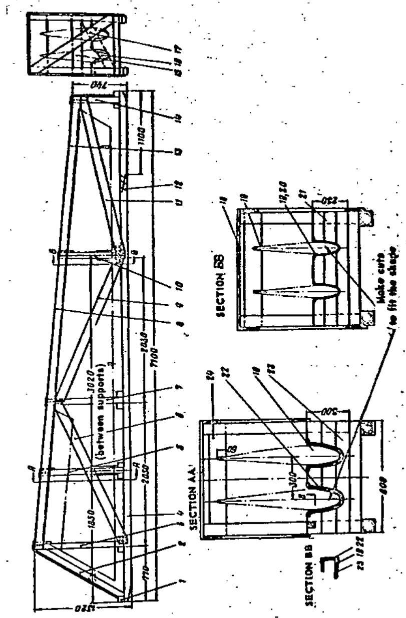

FIG. 139. CARCASS PACKING FOR ELEVATOR

[redacted]

Ref. No.	Description	Quantity	Material	Size, mm
1	2	3	4	5
1	Blocks	11	Pinewood	80x80x800
2	Same	2	Same	80x80x1410
3	Same	2	Same	80x80x1220
4	Same	2	Same	100x100x7100
5	Same	2	Same	80x80x1130
6	Boards	2	Same	20x120x2220
7	Blocks	2	Same	80x80x1030
8	Boards	2	Same	20x120x6360
9	Same	2	Same	20x120x2250
10	Blocks	2	Same	80x80x850
11	Boards	2	Same	20x120x2250
12	Nails	—	State Standard ГОСТ 4028-48	4x100
13	Cover	1	Canvas, type АПП-1, article 383 State Standard ГОСТ 351-41	
14	Blocks	2	Pinewood	80x80x650
15	Board	1	Same	20x120x840
16	Same	1	Same	20x120x800
17	Same	1	Same	20x120x1300
18	Boards	5	Same	20x120x840
19	Covering	1	Commercial felt (δ = 10 mm) State Standard ГОСТ 6418-52	1 sq.m.
20	Coverings	2	Veneer (δ = 3 mm)	120x1450
21	Shields	4	Pinewood	20x250x800
22	Coverings	2	Veneer	3x120x1600
23	Shields	4	Pinewood	20x300x800
24	Boards	4	Same	20x120x800

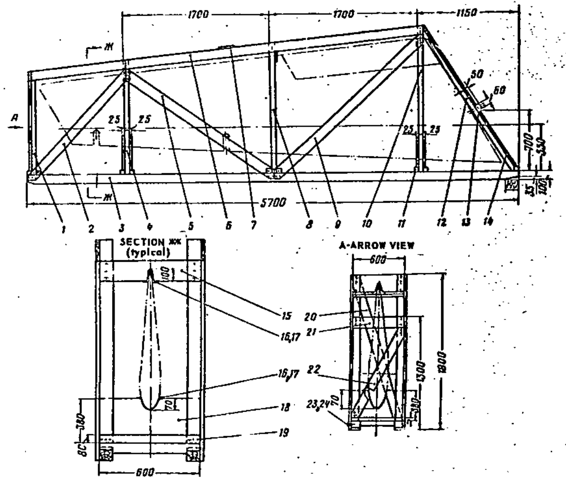

FIG. 140. CARCASS PACKING FOR RUDDER

[redacted]

50X1-HUM

Ref. No.	Description	Quantity	Material	Size, mm
1	2	3	4	5
1	Stands	2	Pinewood	80x80x1200
2	Braces	2	Same	20x120x1670
3	Bars	2	Same	100x100x5700
4	Stands	2	Same	80x80x1330
5	Braces	2	Same	20x120x2200
6	Blocks	2	Same	20x120x4570
7	Board	1	Same	20x120x640
8	Stands	2	Same	80x80x1615
9	Braces	2	Same	20x120x2340
10	Stands	2	Same	80x80x1700
11	Blocks	9	Same	80x80x600
12	Braces	2	Same	80x80x2080
13	Nails	2	State Standard ГОСТ 4028-48	3x50
14	Cover	1	Canvas, type АШ-1, article 383 State Standard ГОСТ 351-41	
15	Supports	3	Pinewood	20x200x600
16	Covering	1	Commercial felt (δ = 10 mm), State Standard ГОСТ 6418-52	0.4 sq.m.
17	Covering	1	Sackcloth	0.5 sq.m.
18	Supports	3	Pinewood (δ = 25 mm)	150x600
19	Nails	–	State Standard ГОСТ 4028-48	4x100
20	Board	1	Pinewood	20x120x2170
21	Boards	2	Same	20x120x600
22	Board	1	Same	20x120x1230
23	Nails for tar paper	–	State Standard ГОСТ 4029-48	2x40
24	Plank	1	Pinewood	5x30x12,600

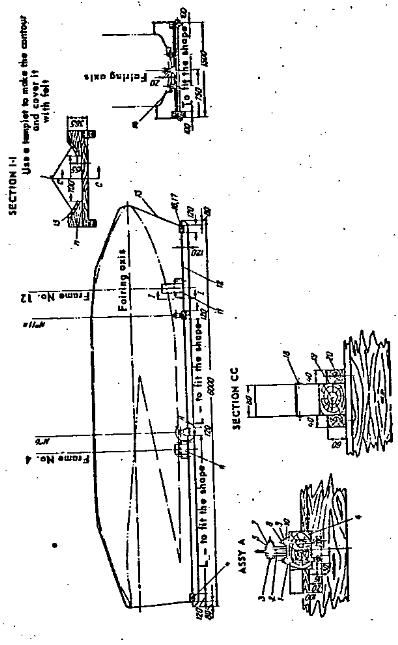

FIG. 141. CARCASS PACKING FOR LANDING GEAR FAIRING

[redacted]

50X1-HUM

Ref. No.	Description	Quantity	Material	Size, mm
1	Bases	3	St.3 (л 8)	30x80
2	Ribs	6	St.3 (л 5)	30x65
3	Bolts	3	St.3 (шк 22)	M12x1.75; L = 40
4	Bars	4	Pinewood	100x120x1500
5	Washers	3	St.3 (л 2)	14x28
6	Support	1	Pinewood	80x325x1500
7	Nuts	3	St.3 (шк 22)	M12x1.75
8	Pins	6	St.3 (шк 12)	L = 120
9	Nuts	6	St.3 (шк 22)	M12x1.75
10	Washers	6	St.3 (л 2)	14x28
11	Support	1	Pinewood	80x280x1500
12	Bars	2	Pinewood	100x120x6000
13	Cover	1	Canvas, type АПП-1, article 838 State Standard ГОСТ 351-41	100x120x6000
14	Brackets	3	St.3	30x39x70
15	Covering	1	Commercial felt (δ = 10 mm) State Standard ГОСТ 6418-52	0.5 sq.m.
16	Nails	-	State Standard ГОСТ 4028-48	2x60
17	Planks	2	Pinewood	5x30x15,000
18	Nails	-	State Standard ГОСТ 4028-48	2x30
19	Same		State Standard ГОСТ 4028-48	4x120
20	Bars	8	Pinewood	4x60x100

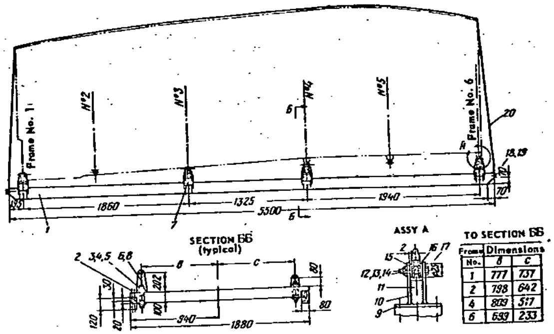

Frame No.	Dimensions в	Dimensions с
1	777	737
2	798	642
4	809	517
6	693	233

FIG. 142. CARCASS PACKING FOR ENGINE NACELLE

Ref. No.	Description	Quantity	Material	Size, mm
1	Blocks	2	Pinewood	80x120x5500
2	Nails	3 kg	State Standard ГОСТ 4028-48	4x110
3	Pins	16	St.3 (к 12)	M12x1.75; L = 130
4	Nuts	32	St.3 (ш 22)	M12x1.75
5	Washers	32	Steel 10 (л 2)	34x14
6	Check plates	4	St.3	6x100x211
7	Bars	4	Pinewood	100x120x1880
8	Ribs	8	St.3	6x23x180
9	Base	8	St.3	6x100x100
10	Check plates	8	St.3	6x100x89
11	Ribs	4	St.3	6x23x60
12	Nuts	8	St.3 (ш 11)	M6x1
13	Washers	8	Steel 20 (к 1.5)	18x7
14	Cotter pins	8	State Standard ГОСТ 397-54	1.5x15
15	Washers	16	Д16 (л 2)	25x10
16	Bushes	8	Д16 (к 18)	h = 9
17	Bolts	8	St.3 (к 16)	M6x1; L = 60
18	Nails	0.1 kg	State Standard ГОСТ 4028-48	2x25
19	Plank	1	Pinewood	10x30x15,000
20	Cover	1	Canvas, type АПП-1, article 383 State Standard ГОСТ 351-41	

[redacted]

50X1-HUM

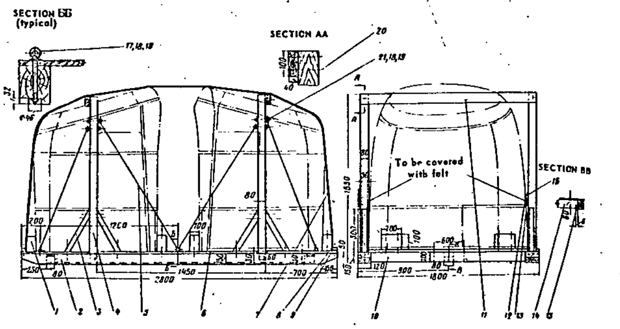

FIG. 143. CARCASS PACKING FOR AIR INTAKE FRONT PART

Ref. No.	Description	Quantity	Material	Size, mm
1	Stops	8	Pinewood	100x100x200
2	Longitudinal bars	2	Same	120x150x2800
3	Braces	4	Same	50x50x300
4	Stands	4	Same	80x80x1530
5	Bracing wire rope	1	Steel 10 (Ø 3), anneeled	60 m.
6	Boards	1	Pinewood	20x2800x1800
7	Cover	1	Canvas, type АПЛ-1, article 383 State Standard ГОСТ 351-41	
8	Nails	-	State Standard ГОСТ 4028-48	3x60
9	Plank	1	Veneer	5x30x9200
10	Cross-beams	2	Pinewood	80x100x1800
11	Clamps	2	Same	40x100x1800
12	Covering	1	Commercial felt (δ = 10 mm)	2.6 sq.m.
13	Clamps	4	Pinewood	80x80x50
14	Block	1	Same	80x80x2140
15	Boards	2	Same	60x100x600
16	Nails	-	State Standard ГОСТ 4028-48	2x40
17	Eye bolts	8	St.3 (К 12)	M12x1.75; L = 175
18	Nuts	14	St.3	M12x1.75
19	Washers	14	St.3 (x 2)	14x25
20	Nails	-	State Standard ГОСТ 4028-48	5x125
21	Eye bolts	6	St.3 (К 12)	M12x1.75; L = 100

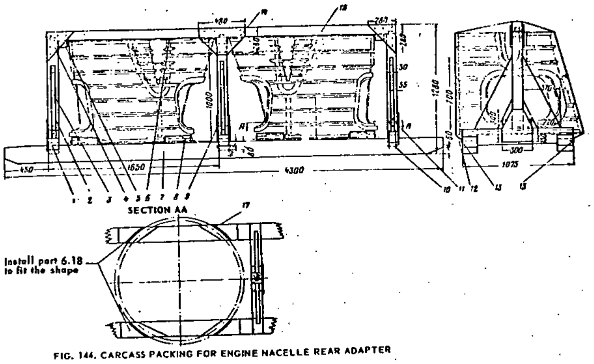

FIG. 144. CARCASS PACKING FOR ENGINE NACELLE REAR ADAPTER

Ref. No.	Description	Quantity	Material	Size, mm
1	Bars	3	Pinewood	100x150x1075
2	Same	3	Same	100x100x1050
3	Same	6	Same	30x370x700
4	Corner plates	4	Veneer (δ = 10 mm)	280x280
5	Bars	2	Pinewood	60x85x100
6	Gaskets	4	Commercial felt State Standard ГОСТ 6418-52	10x100x100
7	Bars	2	Pinewood	150x160x4300
8	Blocks	8	Same	60x140x300
9	Corner plates	4	Veneer (δ = 10 mm)	300x330
10	Nails	-	State Standard ГОСТ 4028-48	5x175
11	Same		State Standard ГОСТ 4028-48	5x150
12	Cover	1	Canvas, type АПЛ-1, article 383 State Standard ГОСТ 351-41	
13	Nails for tar paper	-	Stato Standard ГОСТ 4029-48	2x25
14	Corner plates	2	Veneer	10x280x480
15	Planks	2	Same	5x30x11,000
16	Bar	1	Pinewood	100x100x3400
17	Gaskets	12	Commercial felt State Standard ГОСТ 6418-52	10x120x350

[redacted]

50X1-HUM

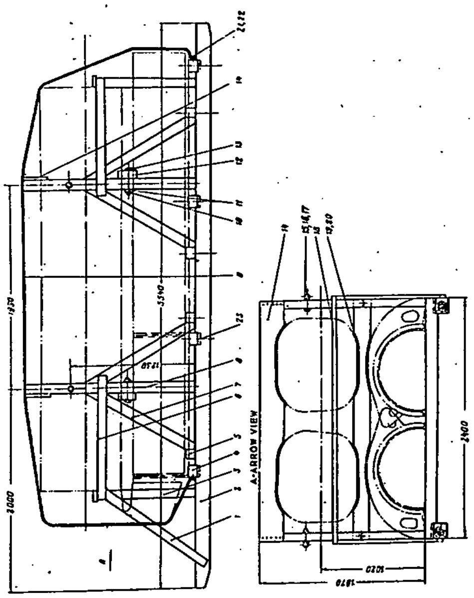

FIG. 143. CARCASS PACKING FOR DUCT AND LOWER PART OF NACELLE

Ref. No.	Description	Quantity	Material	Size, mm
1	Braces	2	Pinewood	40x80x950
2	Blocks	2	Same	150x150x5540
3	Stands	4	Same	80x80x900
4	Blocks	4	Same	100x120x2400
5	Same	8	Same	80x100x150
6	Boards	4	Same	80x40x950
7	Braces	8	Same	80x100x1300
8	Stands	4	Same	80x100x1670
9	Cover	1	Canvas, type АПЛ-1, article 383 State Standard ГОСТ 351-41	
10	Nuts	4	St.3 (жк 22)	M10x1.5; L = 8
11	Washers	4	St.5 (л 2)	12x24
12	Blocks	2	Pinewood	100x120x2400
13	Bolts	4	St.3 (ж 17)	M10x1.5; L = 220
14	Boards	2	Pinewood	30x250x2400
15	Eye bolts	4	St.3 (ж 16)	L = 275
16	Nuts	4	St.3 (жк 27)	M16x2
17	Washers	4	St.5 (л 3)	18x34
18	Boards	2	Pinewood	40x100x2480
19	Covering		Commercial felt (δ = 10 mm) State Standard ГОСТ 6418-52	0.3 sq.m.
20	Covering		Sackcloth	0.6 sq.m.
21	Nails	–	State Standard ГОСТ 4028-48	2x40
22	Plank	1	Pinewood	5x30x12,000
23	Nails	–	State Standard ГОСТ 4028-48	4x120

[redacted]

50X1-HUM

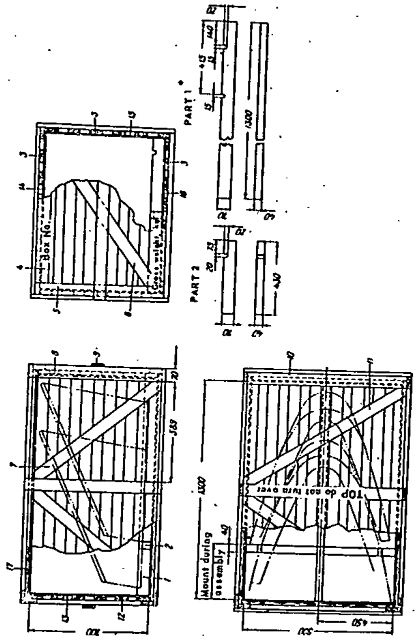

FIG. 146. BOX FOR PACKING FIRST DETACHABLE NOSE OF FIRST DETACHABLE WING PART

Ref. No.	Description	Quantity	Material	Size, mm
1	Support	1	Pinewood	40x70x1300
2	Same	2	Same	40x70x430
3	Boards	28	Same	20x70x1348
4	Same	4	Same	20x70x808
5	Same	4	Same	20x70x748
6	Braces	2	Same	20x70x1030
7	Same	4	Same	20x70x950
8	Boards	6	Same	20x70x788
9	Handles	2	Same	20x70x988
10	Boards	6	Same	20x70x948
11	Braces	4	Same	20x70x1130
12	Boards	12	Same	20x70x900
13	End face walls	2	Veneer	4x700x900
14	Upper wall	1	Same	4x948x1348
15	Side walls	2	Same	4x742x1348
16	Lower wall	1	Same	4x742x1348
17	Tar paper	1	State Standard ГОСТ 1887-51	6.5 sq.m.

50X1-HUM

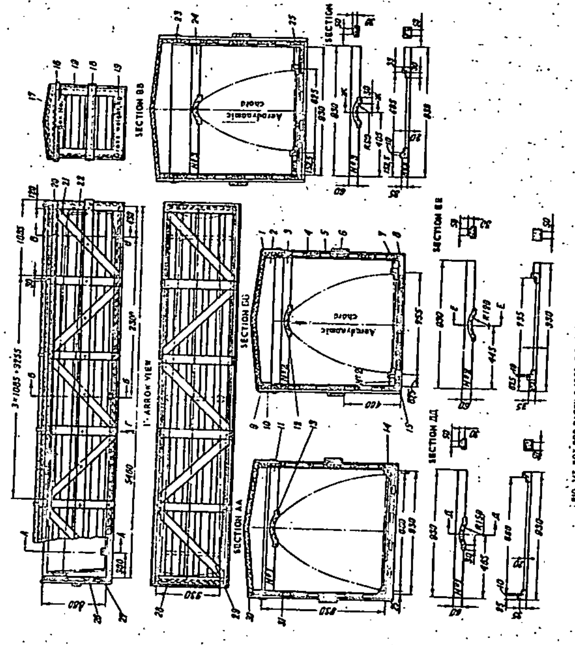

FIG. 117. BOX FOR PACKING SECOND DETACHABLE NOSE OF FIRST DETACHABLE WING PART

Ref. No.	Description	Quantity	Material	Size, mm
1	2	3	4	5
1	Top (shield)	1	Pinewood	20x980x5548
2	Bars	6	Same	30x120x918
3	Support	1	Same	50x60x930
4	Boards	10	Same	20x120x1380
5	Side walls	2	Veneer	4x904x5508
6	Boards	2	Pinewood	20x120x5588
7	Support	1	Same	35x50x930
8	Boards	5	Same	20x120x5508
9	Ruberoid	1	State Standard ГОСТ 2165-51	8 sq.m.
10	Bars	2	Pinewood	30x70x5508
11	Support	1	Same	30x50x930
12	Covering	1	Commercial felt (δ = 10 mm) State Standard ГОСТ 6418-52	0.5 sq.m.
13	Covering	1	Sackcloth	0.5 sq.m.
14	Support	1	Pinewood	35x50x930
15	Lower wall	1	Veneer	4x930x5508
16	Planks	2	Veneer	4x30x1018
17	Boards	4	Pinewood	20x120x924
18	Handles	2	Same	20x120x1018
19	Boards	4	Same	20x120x738
20	Planks	2	Veneer	4x30x5556
21	Braces	10	Pinewood	20x120x1330
22	Boards	12	Same	20x120x1011
23	Nails	–	State Standard ГОСТ 4028-48	1.4x20; 2.5x50; 3x70
24	Support	1	Pinewood	50x60x930
25	Same	1	Same	35x50x930
26	Boards	10	Same	20x120x930
27	End face walls	2	Veneer	4x880x930
28	Boards	6	Pinewood	20x120x978
29	Braces	5	Same	20x120x1385
30	Planks	12	Veneer	10x30x500
31	Tar paper	1	State Standard ГОСТ 1887-51	21 sq.m.

[redacted]

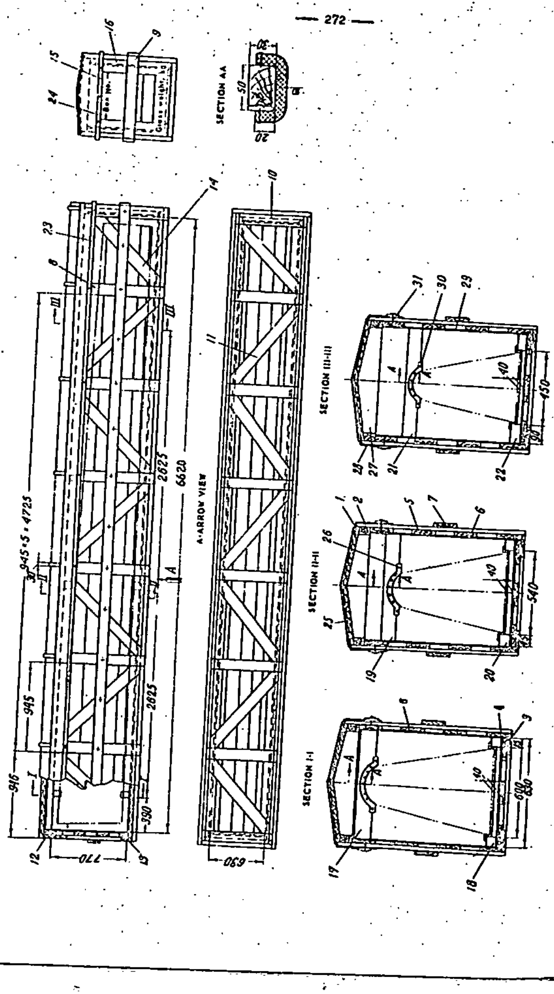

FIG. 14. BOX FOR PACKING FIRST DETACHABLE NOSE OF SECOND DETACHABLE WING PART

50X1-HUM

Ref. No.	Description	Quantity	Material	Size, mm
1	2	3	4	5
1	Top (shield)	1	Pinewood	20x680x6738
2	Boards	2	Same	30x70x6698
3	Same	3	Same	20x120x6698
4	Lower wall	1	Veneer	4x630x6698
5	Boards	8	Pinewood	20x120x6698
6	Side walls	2	Veneer	4x794x6698
7	Boards	2	Pinewood	20x120x6778
8	Same	16	Same	20x120x868
9	Handles	2	Same	20x120x758
10	Boards	8	Same	20x120x678
11	Same	7	Same	20x120x1100
12	Same	8	Same	20x120x630
13	End face walls	2	Veneer	4x630x770
14	Boards	14	Pinewood	20x120x1200
15	Same	4	Same	20x120x438
16	Same	4	Same	20x120x848
17	Support	1	Same	50x70x630
18	Bar	1	Same	50x60x630
19	Support	1	Same	50x70x630
20	Same	1	Same	50x60x630
21	Same	1	Same	50x70x630
22	Same	1	Same	50x60x630
23	Planks	2	Veneer	4x20x6778
24	Same	2	Same	4x20x758
25	Same	16	Same	10x30x360
26	Covering	1	Commercial felt (δ = 10 mm) State Standard ГОСТ 6418-52	0.5 sq.m.
27	Bars	8	Pinewood	30x120x616
28	Ruberoid	1	State Standard ГОСТ 2165-51	5 sq.m.
29	Tar paper	1	State Standard ГОСТ 1887-51	22 sq.m.
30	Covering	1	Sackcloth	1 sq.m.
31	Nails	–	State Standard ГОСТ 4028-48	1.4x20; 2.5x50; 3x70

[redacted]

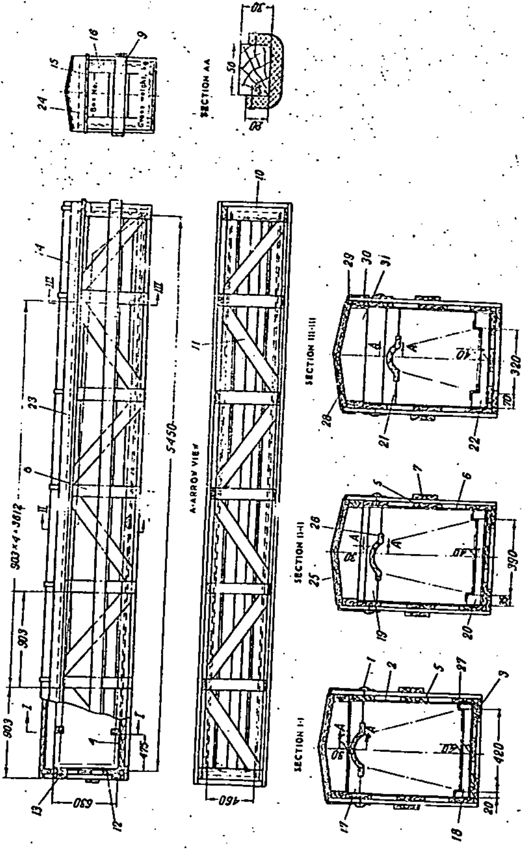

FIG. 149. BOX FOR PACKING SECOND DETACHABLE NOSE OF SECOND DETACHABLE WING PART

50X1-HUM

Ref. No.	Description	Quantity	Material	Size, mm
1.	2	3	4	5
1	Nails	–	State Standard ГОСТ 4028-48	1.4x20;2.5x50; 3x70
2	Tar paper	1	State Standard ГОСТ 1887-51	22 sq.m.
3	Boards	3	Pinewood	20x120x5498
4	Lower wall	1	Veneer	4x460x5498
5	Boards	6	Pinewood	20x120x5498
6	Side walls	2	Veneer	4x654x5498
7	Handles	2	Pinewood	20x120x5578
8	Boards	14	Same	20x120x728
9	Same	2	Same	20x120x548
10	Same	7	Same	20x120x508
11	Braces	6	Same	20x120x930
12	Boards	6	Same	20x120x460
13	End face walls	2	Veneer	4x460x630
14	Braces	12	Pinewood	20x120x1060
15	Boards	4	Same	20x120x268
16	Same	4	Same	20x120x708
17	Support	1	Same	50x70x460
18	Same	1	Same	50x60x460
19	Same	1	Same	50x70x460
20	Same	1	Same	50x60x460
21	Same	1	Same	50x70x460
22	Same	1	Same	50x60x460
23	Planks	2	Veneer	4x20x5542
24	Same	2	Same	4x20x548
25	Same	14	Pinewood	10x30x275
26	Covering	1	Commercial felt (δ = 10 mm) State Standard ГОСТ 6418-52	0.5 sq.m.
27	Same	1	Sackcloth	0.5 sq.m.
28	Ruberoid	1	State Standard ГОСТ 2165-51	5 sq.m.
29	Top (shield)	1	Pinewood	20x510x5538
30	Bars	2	Same	30x70x5498
31	Same	7	Same	30x120x448

[redacted]

50X1-HUM

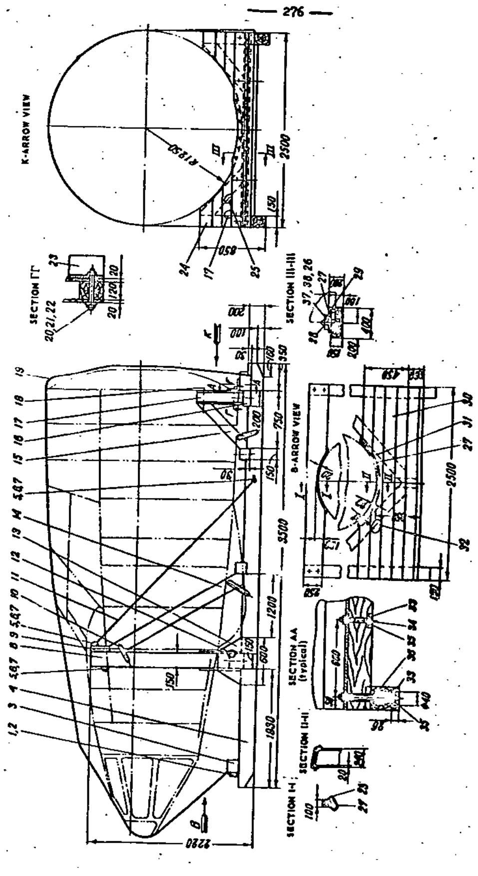

FIG. 150. CARCASS PACKING FOR FRONT PRESSURIZED COCKPIT

Ref. No.	Description	Quantity	Material	Size, mm
1	Plank	1	Pinewood	20x40x16,000
2	Nails	-	State Standard ГОСТ 4028-48	3x40
3	Blocks	6	Pinewood	150x150x150
4	Same	2	Same	200x150x5500
5	Eye bolts	4	St.3 (x 16)	M16x2; L = 300
6	Nuts	4	St.3 (x 27)	M16x2
7	Washers	4	Steel 20 (x 3)	ø 46/18
8	Blocks	2	Pinewood	150x200x2220
9	Block	1	Same	100x250x2500
10	Clamps	6	Ready-made part	
11	Wire		St.3 (x 3)	L = 21,600
12	Blocks	2	Pinewood	150x200x2500
13	Corner plates	2	Veneer	8x600x500
14	Blocks	2	Pinewood	150x150x2000
15	Same	2	Same	150x150x900
16	Same	1	Same	100x200x2500
17	Same	2	Same	150x150x600
18	Nails	-	State Standard ГОСТ 4028-48	5x175
19	Cover	-	Canvas, type АПП-1, article 383 State Standard ГОСТ 351-41	
20	Pins	4	St.3 (x 12)	L = 195
21	Nuts	4	St.3 (x 22)	M12x1.75
22	Washers	4	Steel 20 (x 3)	ø 34/12
23	Thrust angle	1	St.3 (100x100x10 mm)	L = 2500
24	Boards	8	Pinewood	20x150x2500
25	Blocks	2	Same	150x150x800
26	Bolts	6	St.3 (x 14)	M8x1.75; L = 50
27	Covering	-	Commercial felt (δ = 20 mm) State Standard ГОСТ 6418-52	0.5 sq.m.
28	Same	1	Veneer	4x190x2500
29	Nails	-	State Standard ГОСТ 4028-48	3x40
30	Boards	8	Pinewood	20x150x2500
31	Covering	1	Veneer	4x240x1200
32	Blocks	2	Pinewood	150x150x1500
33	Washers	13	Steel 20 (x 2)	34x14
34	Pins	7	St.3 (x 12)	M12x1.75; L = 150
35	Nuts	13	St.3 (x 22)	M12x1.75
36	Pins	6	St.3 (x 12)	M12x1.74; L = 350
37	Nuts	6	St.3 (x 14)	M8x1.25
38	Washers	6	Steel 20 (x 2)	22x9

[redacted]

50X1-HUM

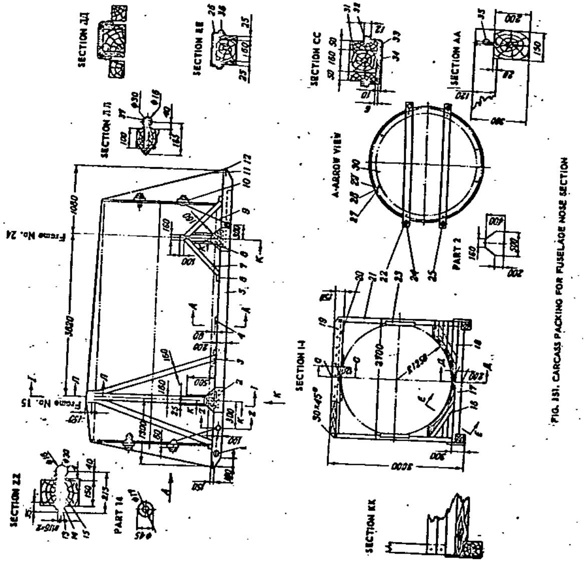

FIG. 131. CARCASS PACKING FOR FUSELAGE NOSE SECTION

Ref. No.	Description	Quantity	Material	Size, mm
1	Bars	4	Pinewood	120x120x800
2	Corner plates	4	Veneer	5x400x500
3	Bars	4	Pinewood	120x160x2800
4	Same	5	Same	120x120x2700
5	Same	2	Same	150x200x6000
6	Short bars	8	Same	120x120x150
7	Bars	4	Same	120x160x1100
8	Same	2	Same	100x160x950
9	Wire	2	Steel 10 (Ø3), annealed	L = 40 m.
10	Boards	4	Pinewood	80x120x2700
11	Cover	1	Canvas, type АПП-1, article 383 State Standard ГОСТ 351-41	
12	Plank	1	Veneer	4x30x18,000
13	Nuts	14	St.3 (x 27)	M16x2; H = 112
14	Washers	14	Steel 10 (x 3)	17x45
15	Eye bolts	4	St.3 (x 16)	M16x2; L = 325
16	Bars	4	Pinewood	120x160x1000
17	Same	2	Same	120x160x2700
18	Shields	4	Same	25x500x2700
19	Nails	-	State Standard ГОСТ 4028-48	1.4x20; 2.5x50; 3x70
20	Boards	2	Pinewood	50x150x2700
21	Bars	2	Same	100x160x2700
22	Eye bolts	8	St.3 (x 16)	M16x2; L = 265
23	Covering	1	Commercial felt (δ = 10 mm) State Standard ГОСТ 6418-52	1 sq.m.
24	Washers	14	Steel 10 (л 2)	17x35
25	Bolts	8	St.3 (x 14)	M8x1.25; L = 130
26	Gaskets	2	Veneer	6x170x1900
27	Bolts	8	St.5 (x 14)	M8x1.25; L = 45
28	Nuts	16	St.5 (x 14)	M8x1.25; L = 6
29	Washers	16	Steel 10 (x 2)	9x20
30	Plugs	2	Veneer	4x2600
31	Bar	1	Pinewood	120x160x2700
32	Band	1	Д16 (л 0.8)	12x600
33	Gasket	1	Veneer	6x220x950
34	Covering	1	Sackcloth	1.25 sq.m.
35	Nails	-	State Standard ГОСТ 4028-48	6x200
36	Bands	4	Д16 (л 0.8)	12x1800
37	Eye bolts	2	St.3 (x 16)	M16x2; L = 275

[redacted]

50X1-HUM

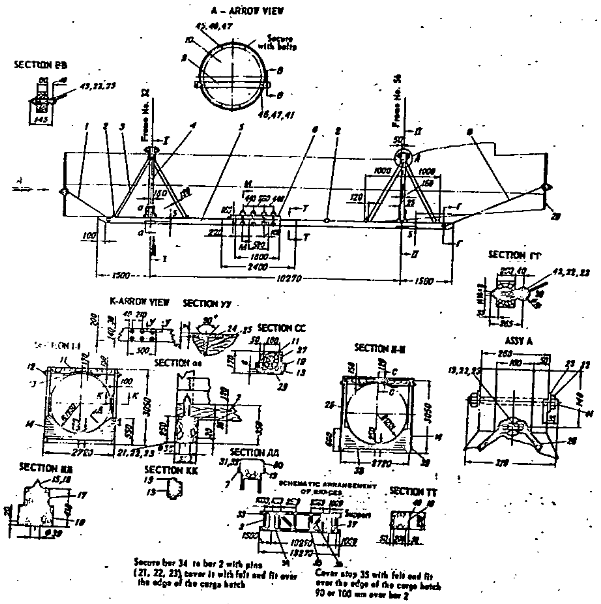

Secure bar 34 to bar 2 with pins (21, 22, 23) cover it with felt and fit over the edge of the cargo hatch

Cover stop 35 with felt and fit over the edge of the cargo hatch 90 or 100 mm over bar 2

FIG. 152. CARCASS PACKING FOR FUSELAGE TAIL SECTION

Ref. No.	Description	Quantity	Material	Size, mm
1	2	3	4	5
1	Wire	2	Steel 10 (ø3), annealed	L = 18,000
2	Bars	10	Pinewood	120x160x2720
3	Same	8	Same	120x160x2800
4	Same	4	Same	120x160x2700
5	Same	2	Same	200x250x13,270
6	Same	2	Same	160x200x1600
7	Nails		State Standard ГОСТ 4028-48	2x40
8	Wire	2	Steel 10 (ø3), annealed	L = 30 m.
9	Boards	2	Pinewood	80x150x2700
10	Plug	1	Veneer (δ = 4 mm)	ø2500
11	Bars	2	Pinewood	120x160x2720
12	Eye bolts	4	St.3 (я 16)	L = 295
13	Coverings	6	Commercial felt (δ = 10 mm) State Standard ГОСТ 6418-52	300x800
14	Shields	4	Pinewood	25x350x2720
15	Nuts	16	St.3 (я 22)	M12x1.75; H = 10
16	Washers	16	Steel 10 (л 2)	ø34/14
17	Pins	8	St.3 (я 12)	L = 440
18	Boards	4	Pinewood	15x250x2400
19	Band	1	Д16 (л 0.8)	12x7000
20	Plug	1	Veneer (δ = 4 mm)	ø2250
21	Bolts	16	St.3 (я 16)	L = 360
22	Nuts	66	St.3 (я 27)	M16x2; H = 13
23	Washers	50	Steel 10 (л 2)	35x18
24	Plates	4	St.3 (л 5)	200x500
25	Screw nails	24	State Standard ГОСТ 1145-41	6x65
26	Cover	1	Canvas, type АПП-1, article 383 State Standard ГОСТ 351-41	9.2x32.8 m.
27	Boards	4	Pinewood	50x150x2720
28	Wire	8	Steel 10 (ø3), annealed	19,200
29	Coverings	4	Veneer (δ = 4 mm)	220x800 (two layers)
30	Same	2	Same (δ = 6 mm)	170x2500
31	Same	2	Commercial felt (δ = 6 mm) State Standard ГОСТ 6418-52	250x2000
32	Covering	1	Sackcloth	2.0 sq.m.
33	Bars	4	Pinewood	100x100x500
34	Bar	1	Same	120x150x1000
35	Board	1	Same	80x160x1000

[redacted]

50X1-HUM

1	2	3	4	5
36	Bars	2	Same	120x120x3500
37	Same	2	Same	120x160x2720
38	Same	4	Same	160x160x1000
39	Plates	1	Same	15x30x40,000
40	Nails	-	State Standard ГОСТ 4028-48	5x150
41	Bolts	4	St.3 (x 14)	M8x1.25; L = 130
42	Eye bolts	4	St.3 (x 16)	L = 375
43	Same	4	St.3 (x 16)	L = 275
44	Pins	4	St.3 (x 16)	L = 310
45	Bolts	8	St.3 (x 14)	L = 45
46	Nuts	12	St.3 (x 14)	M8x1.25; H = 6.5
47	Washers	12	Steel 10 (x 1.5)	20x9

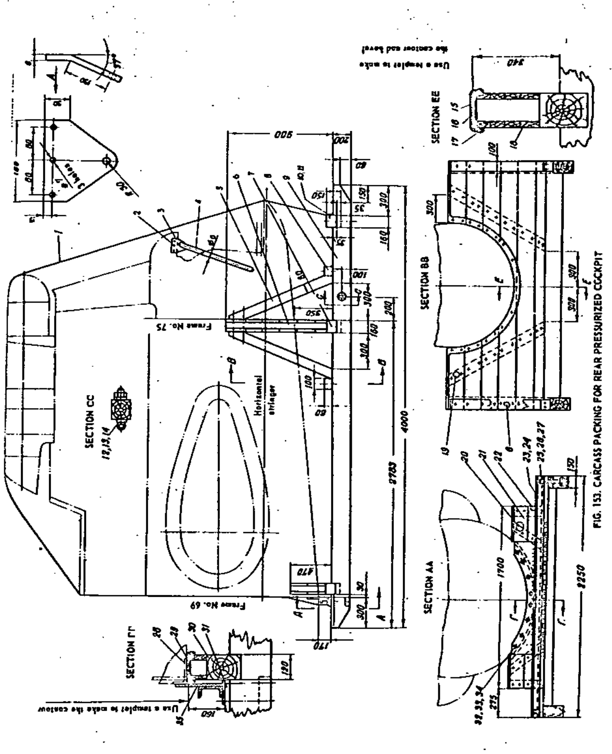

FIG. 153. CARCASS PACKING FOR REAR PRESSURIZED COCKPIT

[redacted]

50X1-HUM

Ref. No.	Description	Quantity	Material	Size, mm
1	Cover	1	Canvas, type АПЛ-1, article 383 State Standard ГОСТ 351-41	
2	Bolts	6	St.3 (ø 11)	M6x1; L = 25
3	Planks	2	St.3 (ø 6)	180x190
4	Wire	-	Steel 10 (ø3), annealed	L = 75,000
5	Bars	6	Pinewood	80x100x1050
6	Same	2	Same	80x100x1000
7	Same	2	Same	120x150x2250
8	Same	4	Same	80x100x150
9	Same	2	Same	150x200x4000
10	Plank	1	Same.	10x30x12,500
11	Nails	-	State Standard ГОСТ 4028-48	2x25
12	Eye bolts	17	St.3 (ø 12)	M12x1.75; L = 207
13	Nuts	6	St.3 (ø 22)	M12x1.75
14	Washers	6	St.3 (ø 3)	14x34
15	Gasket	1	Commercial felt (δ = 10 mm) State Standard ГОСТ 6418-52	200x2500
16	Sheet	1	Veneer (δ = 5 mm)	120x2400
17	Nails	-	State Standard ГОСТ 4028-48	2x30
18	Boards	12	Pinewood	40x150x2000
19	Blocks	2	Same	80x100x1100
20	Same	2	Same	80x100x500
21	Boards	2	Pinewood	40x150x1700
22	Blocks	2	Same	80x100x400
23	Base	1	St.3	8x150x2250
24	Channel	1	St.3 (No.10)	L = 2250
25	Pins	4	St.3 (ø 16)	M16x2; L = 220
26	Nuts	8	St.5 (ø 27)	M16x2
27	Washers	8	St.3 (ø 3)	18x34
28	Gasket	1	Commercial felt (δ = 10 mm) State Standard ГОСТ 6418-52	200x1800
29	Sheet	1	Veneer (δ = 5 mm)	120x1700
30	Block	1	Pinewood	120x150x2250
31	Gaskets	2	Veneer (δ = 5 mm)	120x150
32	Bolts	8	St.3 (ø 16)	M8x1.25; L = 45
33	Nuts	8	St.5 (ø 14)	M8x1.25
34	Washers	8	St.3 (ø 1.5)	9x18
35	Plate	1	St.3	8x200x1100

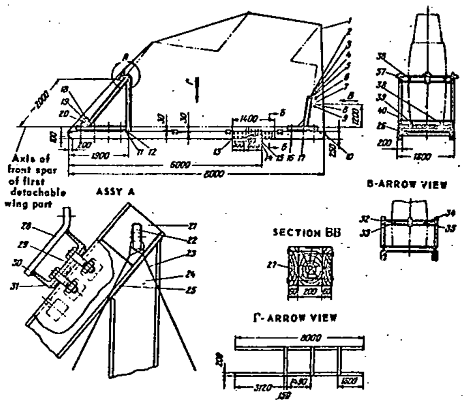

FIG. 154. CARCASS PACKING FOR FIRST DETACHABLE WING PART

[redacted]

50X1-HUM

Ref. No.	Description	Quantity	Material	Size, mm
1	Cover	1	Canvas, type АПЛ-1, article 383 State Standard ГОСТ 351-41	9100x13.000
2	Channels	2	St.3 (No.14)	L = 1280
3	Same	2	St.3 (No.14)	L = 1534
4	Corner plates	2	St.3 (л 8)	350x350
5	Channels	2	St.3 (No.14)	L = 1000
6	Same	1	St.3 (No.14)	L = 1650
7	Plate	1	St.3 (л 6)	130x1650
8	Gasket	1	Rubber, grade 3826 (Specifications ТУ МХП 1166-49 and 838-49)	3x130x1650
9	Plate	1	St.3	20x60x230
10	Plank	1	Veneer	4x30x20,000
11	Channels	2	St.3 (No.14)	L = 1560
12	Same	2	St.3 (No.14)	L = 1534
13	Nails	–	State Standard ГОСТ 4028-48	5x175
14	Washers	38	Steel 10 (x 3)	17x30
15	Pins	12	St.5 (x 16)	M16x2; L = 260
16	Same	14	St.5 (x 16)	M16x2; L = 370
17	Bars	2	Pinewood	200x250x6000
18	Channel	1	St.3 (No.14)	L = 1650
19	Plate	1	St.3 (x 2)	130x1650
20	Gasket	1	Rubber, grade 3826 (Specifications ТУ МХП 1166-49 and 838-49)	3x130x1650
21	Plates	2	St.3 (x 8)	90x100
22	Eye	2	St.3	20x60x100
23	Wire	1	Steel 10 (ø3)	L = 50 m.
24	Channels	2	St.3 (No.14)	L = 1670
25	Same	2	St.3 (No.14)	L = 2160
26	Bars	3	Pinewood	120x150x1800
27	Boards	4	Same	60x250x1400
28	Plate	1	St.3	20x60x244
29	Same	1	St.3 (x 8)	130x1650
30	Channel	1	St.3 (No.14)	L = 1650
31	Gasket	1	Rubber, grade 3826 (Specifications ТУ МХП 1166-49 and 838-49)	3x130x1650
32	Nuts	57	St.3 (= 27)	M16x2; L = 12
33	Bolt	1	St.3 (= 27)	M16x2; d = 16; L = 80
34	Same	1	St.3 (= 32)	M20x2.5; d = 22; L = 85
35	Nut	1	St.3 (= 32)	M20x2.5; L = 16

1	2	3	4	5
36	Bolts	2	St.3 (= 27)	M16x2; L = 65; d = 16
37	Same	12	St.3 (= 27)	M16x2; L = 50
38	Same	2	St.3 (= 27)	M16x2; L = 65; d = 16
39	Same	2	St.3 (= 22)	M12x1.75; L = 55; d = 14
40	Nuts	2	St.3 (= 22)	M12x1.75; L = 10

[redacted]

50X1-HUM

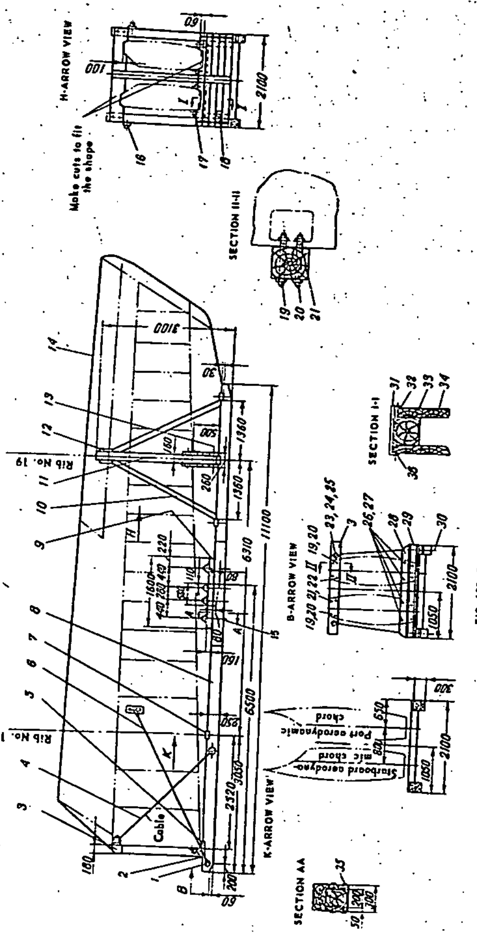

FIG. 133. CARCASS PACKING FOR SECOND DETACHABLE WING PART

Ref. No.	Description	Quantity	Material	Size, mm
1	Pins	3	St.3 (x 12)	M12x1.75; L = 210
2	Planks	1	Pinewood	10x40x26,400
3	Block	1	Same	120x180x2100
4	Wire	1	Steel 10 (Ø3), annealed	L = 6000
5	Block	1	Pinewood	200x200x2100
6	Wire	1	Steel 10 (Ø3), annealed	L = 24,000
7	Blocks	3	Pinewood	150x150x2100
8	Same	2	Same	200x250x11,100
9	Boards	4	Same	50x250x3350
10	Blocks	4	Same	100x100x2700
11	Same	3	Same	160x160x3000
12	Same	2	Same	50x250x2100
13	Nails	-	State Standard ГОСТ 4028-48	5x175
14	Cover		Canvas, type АПВ-1, article 383 State Standard ГОСТ 351-41	
15	Pins	8	St.3 (x 12)	M12x1.75; L = 440
16	Eye bolts	2	St.3 (x 12)	M12x1.75; L = 175
17	Boards	4	Pinewood	50x150x210
18	Blocks	2	Same	120x160x340
19	Pins	4	St.3 (x 14)	M14x2; L = 240
20	Nuts	8	St.5 (s 22)	M14x2
21	Pins	4	St.3 (x 20)	M20x2.5; L = 240
22	Nuts	16	St.5 (s 32)	M20x2.5
23	Eye bolts	6	St.3 (x 12)	M12x1.75; L = 200
24	Nuts	19	St.5 (s 22)	M12x1.75
25	Washers	26	St.5 (δ = 2 mm)	14x28
26	Bolts	4	St.3 (x 26)	M14x2; L = 70
27	Same	4	St.3 (x 38)	M20x2.5; L = 65
28	Plate	1	St.3 (x 8)	280x2100
29	Channel	1	St.3 (No.12)	L = 2100
30	Pins	4	St.3 (x 12)	M12x1.75; L = 460
31	Covering	1	Commercial felt (δ = 8 mm) State Standard ГОСТ 6418-52	1 sq.m.
32	Coverings	2	Veneer (δ = 5 mm)	
33	Block	1	Pinewood	160x160x1780
34	Boards	10	Same	50x150x2100
35	Nails	-	State Standard ГОСТ 4028-48	4x100
36	Covering	1	Sackcloth	15 sq.m.

[redacted]

50X1-HUM

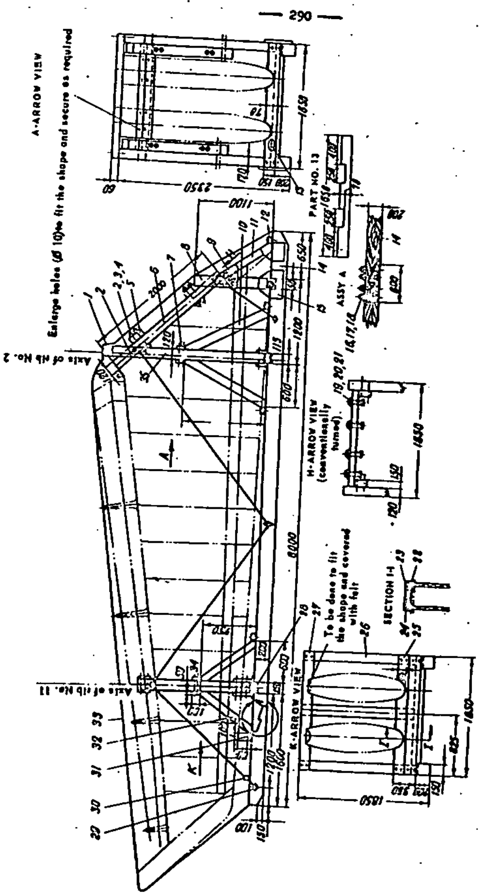

FIG. 154. CARCASS PACKING FOR STABILIZER

Ref. No.	Description	Quantity	Material	Size, mm
1	Block	1	Pinewood	60x120x1650
2	Pins	16	St.3 (x 12)	L = 350
3	Washers	32	Steel 20 (s 3)	34x14
4	Nuts	16	St.3	M12x1.75
5	Blocks	2	Pinewood	100x200x1650
6	Same	2	Same	150x120x2000
7	Same	8	Same	50x100x120
8	Same	2	Same	120x150x1100
9	Corner plates	2	Veneer	8x300x300
10	Blocks	4	Pinewood	100x100x1300
11	Same	2	Same	100x100x850
12	Block	1	Same	60x120x1650
13	Same	2	Same	150x150x1650
14	Same	2	Same	150x200x8800
15	Corner plates	2	Veneer	5x400x350
16	Bolts	8	St.5 (x 30)	L = 220
17	Nuts	22	St.3	M12x1.75
18	Washers	22	Steel 20 (s 3)	⌀34/14
19	Bolts	16	St.5 (x 20)	L = 150
20	Nuts	16	St.3	M10x1.5
21	Washers	16	Steel 20 (s 3)	28x12
22	Coverings	4	Veneer	5x190
23	Same	1	Sackcloth	2.5 sq.m.
24	Same	1	Commercial felt (δ = 10 cm) State Standard ГОСТ 6418-52	2 sq.m.
25	Supports	6	Pinewood	40x150x1650
26	Blocks	3	Same	120x150x1650
27	Supports	2	Same	40x150x1650
28	Block	1	Same	150x150x1650
29	Eye bolts	12	St.3	M12x1.75; L = 175
30	Wire	1	Steel 10 (x 6), annealed	
31	Blocks	4	Pinewood	80x100x1650
32	Same	4	Same	100x100x1000
33	Cover	1	Canvas, type АПП-1, article 383 State Standard ГОСТ 351-41	
34	Blocks	8	Pinewood	50x100x120
35	Same	2	Same	120x150x2100

[redacted]

50X1-HUM

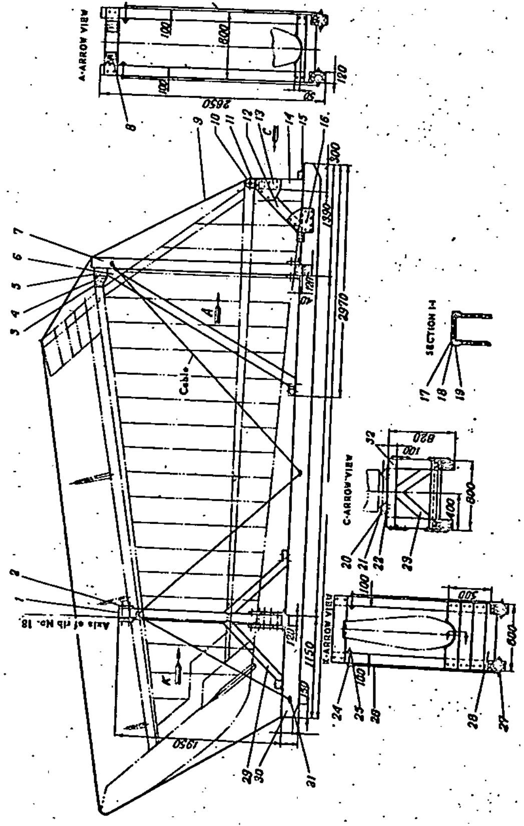

FIG. 157. CARCASS PACKING FOR FIN

Ref. No.	Description	Quantity	Material	Size, mm
1	Bars	2	Pinewood	100x120x1980
2	Boards	10	Same	20x150x800
3	Bolts	2	St.3 (= 27)	M16x2; L = 65
4	Angles	8	St.3 (75x75x8)	L = 120
5	Block	1	Pinewood	100x150x300
6	Same	2	Same	100x100x2700
7	Same	2	Same	100x120x2480
8	Pins	16	St.3 (x 12)	M12x1.75; L = 175
9	Cover pattern	1	Canvas, type AПЛ-1, article 383 State Standard ГОСТ 351-41	
10	Bushes	8	Д20 (x 30)	L = 8
11	Washers	16	Д2 (л 2)	18x35
12	Bars	2	Pinewood	100x100x800
13	Corner plates	4	Veneer	8x250x250
14	Bars	2	Pinewood	120x120x550
15	Same	5	Same	100x100x800
16	Nails	1 kg	State Standard ГОСТ 4028-48	3x50; 5x175
17	Covering	1	Sackcloth	0.5 sq.m.
18	Same	1	Commercial felt (δ = 10 mm) State Standard ГОСТ 6418-52	0.5 sq.m.
19	Gaskets	2	Veneer	5x160x500
20	Bolts	2	St.3 (a 27)	M16x2; L = 60
21	Nuts	4	St.3 (a 27)	M16x2; L = 12
22	Plates	8	St.3 (л 8)	120x120
23	Bars	2	Pinewood	100x120x450
24	Eye bolts	4	St.5 (x 12)	M12x1.75; L = 250
25	Nuts	24	St.5 (a 22)	M12x1.75; L = 10
26	Wire	1	Steel 10 (Ø3), annealed	
27	Washers	24	Steel 10 (x 2)	12x25
28	Bars	2	Pinewood	120x120x600
29	Same	4	Same	100x100x1000
30	Same	2	Same	140x160x550
31	Eye bolts	4	St.5 (x 12)	M12x1.75; L = 265
32	Bar	1	Pinewood	100x120x800

[redacted]

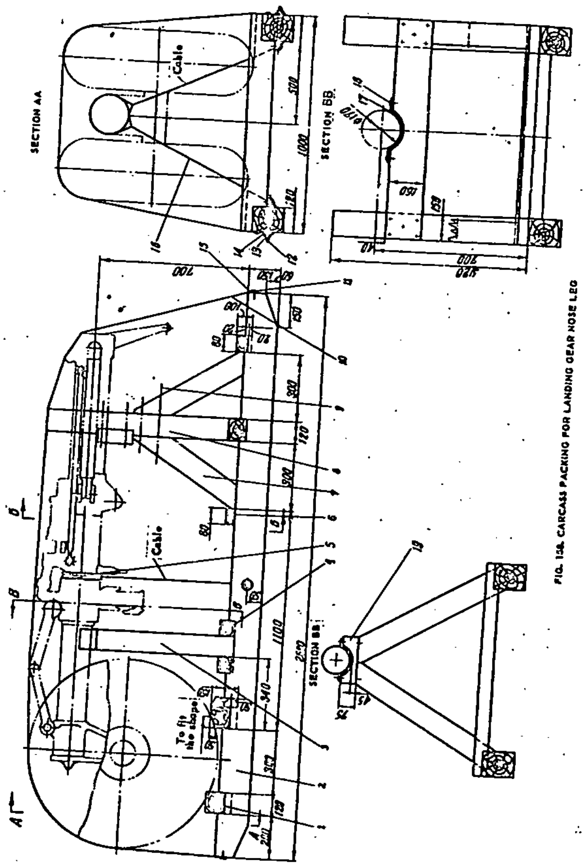

FIG. 158. CARCASS PACKING FOR LANDING GEAR NOSE LEG

Ref. No.	Description	Quantity	Material	Size, mm
1	Cross-beams	3	Pinewood	120x150x1000
2	Longitudinal bars	2	Same	120x150x2680
3	Stands	2	Same	120x120x750
4	Blocks	3	Same	80x100x1000
5	Gaskets	3	Commercial felt State Standard ГОСТ 6418-52	10x90x560
6	Blocks	2	Pinewood	60x80x120
7	Braces	4	Same	100x120x600
8	Stands	2	Same	120x150x1000
9	Nails	-	State Standard ГОСТ 4028-48	5x175
10	Cover	1	Canvas, type АПП-1, article 383 State Standard ГОСТ 351-41	
11	Plank	1	Veneer	5x30x7400
12	Eye bolts	2	St.3 (x 12)	M12x1.75; L = 140
13	Nuts	2	St.3	M12x1.75
14	Washers	2	St.3 (x 2)	14x25
15	Nails	-	State Standard ГОСТ 4028-48	2x40
16	Bracing wire ropes	2	Steel 10 (Ø3), annealed	L = 9000
17	Covering		Sackcloth	0.05 sq.m.
18	Nails		State Standard ГОСТ 4028-48	2x30
19	Support	1	Pinewood	75x120x225

[redacted]

50X1-HUM

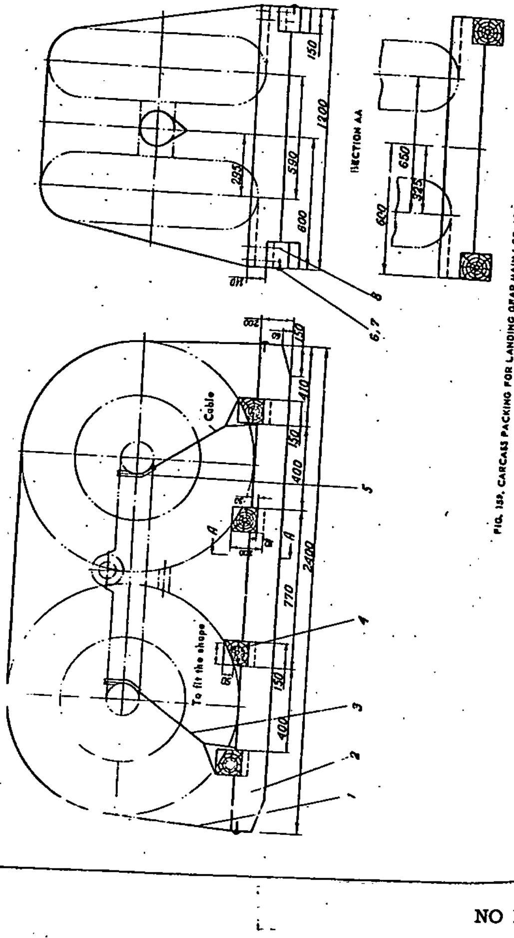

FIG. 159. CARCASS PACKING FOR LANDING GEAR MAIN LEG BOGEY

Ref. No.	Description	Quantity	Material	Size, mm
1	Cover	1	Canvas, type АПП-1, article 383 State Standard ГОСТ 351-41	3600x4800
2	Blocks	2	Pinewood	150x200x2400
3	Wire	1	Steel 10 (⌀3), annealed	L = 118,000
4	Blocks	4	Pinewood	150x200x1200
5	Gaskets	2	Commercial felt State Standard ГОСТ 6418-52	10x50x560
6	Plank	1	Pinewood	5x30x7200
7	Nails for tar paper	–	State Standard ГОСТ 4029-48	2x40
8	Nails	–	State Standard ГОСТ 4028-48	6x200

[redacted]

50X1-HUM

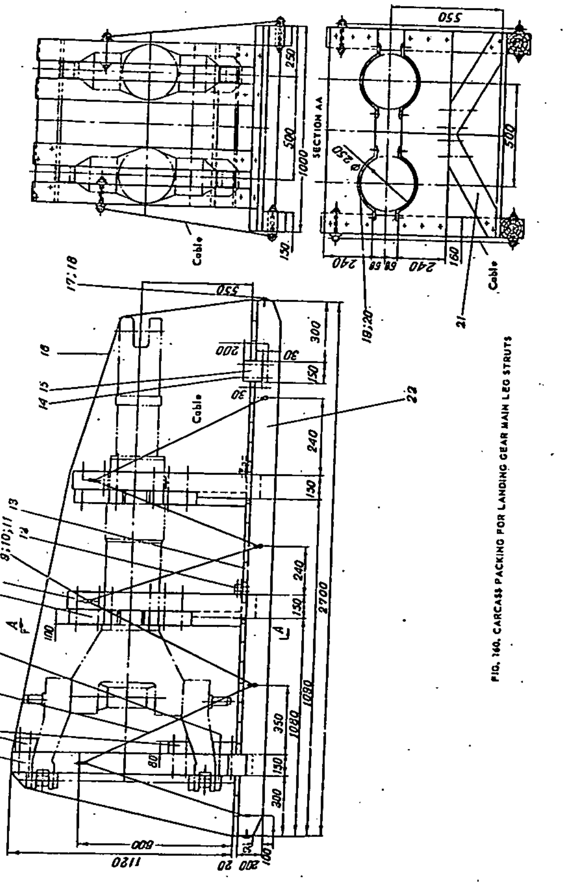

FIG. 160. CARCASS PACKING FOR LANDING GEAR MAIN LEG STRUTS

Ref. No.	Description	Quantity	Material	Size, mm
1	Bars	4	Pinewood	150x160x1220
2	Boards	3	Same	80x120x1000
3	Wire	1	Steel 10 (ø 3), annealed	70 m.
4	Pins	48	St.5 (ø 12)	M12x1.75; L = 280
5	Washers	96	Steel 20 (ø 2)	34x14
6	Nuts	96	St.3 (ø 22)	M12x1.75
7	Boards	4	Pinewood	100x240x1000
8	Blocks	4	Same	150x160x950
9	Eye bolts	14	St.3 (ø 12)	L = 175
10	Washers	14	Steel 20 (ø 2)	34x14
11	Nuts	14	St.3 (ø 22)	M12x1.75
12	Blocks	4	Pinewood	80x100x100
13	Boards	26	Same	20x100x1900
14	Nails	–	State Standard ГОСТ 4028-48	5x175
15	Blocks	2	Pinewood	150x200x1000
16	Cover	1	Canvas, type АПЛ-1, article 383 State Standard ГОСТ 351-41	
17	Plank	1	Veneer	5x30x7400
18	Nails	–	State Standard ГОСТ 4028-48	2x25
19	Gasket	1	Commercial felt (δ = 10 mm) State Standard ГОСТ 6418-52	120x6000
20	Nails	–	State Standard ГОСТ 4028-48	2x25
21	Boards	4	Pinewood	60x100x550
22	Bars	2	Same	150x200x2700

[redacted]

50X1-HUM

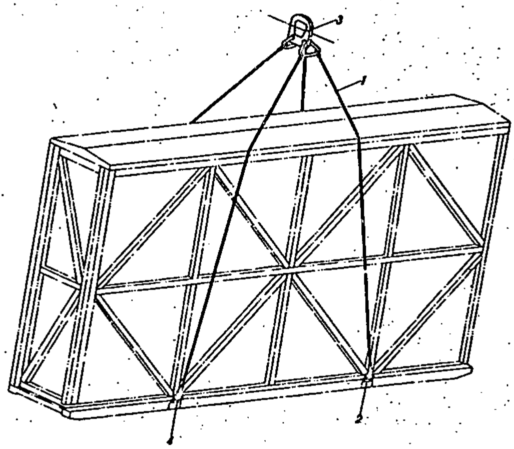

FIG. 161. CONTAINER WITH HOISTING DEVICE
1 – cable; 2 – lifting eye; 3 – hoisting ring; 4 – snap hook.

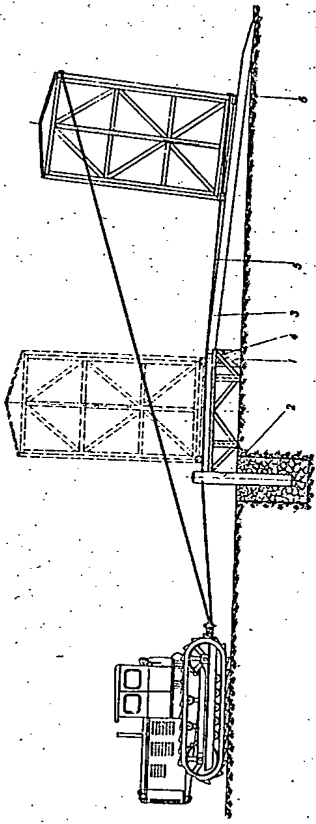

FIG. 162. LOADING CONTAINER ON SLEDGE BY MEANS OF TRACTOR.
1 – block; 2 – stand; 3 – poles; 4 – block; 5 – cable; 6 – lifting eye.

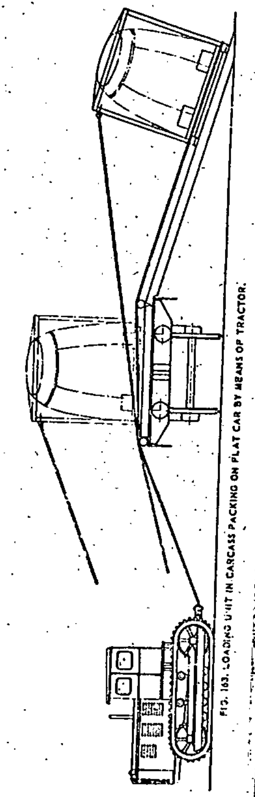

FIG. 163. LOADING UNIT IN CARCASS PACKING ON FLAT CAR BY MEANS OF TRACTOR.

[redacted]

50X1-HUM

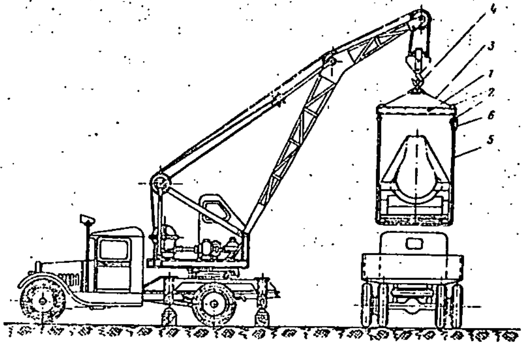

FIG. 164. LOADING UNIT IN CARCASS PACKING BY MEANS OF CRANE
1 – frame; 2 – plates; 3 – cable; 4 – clamp; 5 – cables; 6 – shackle.

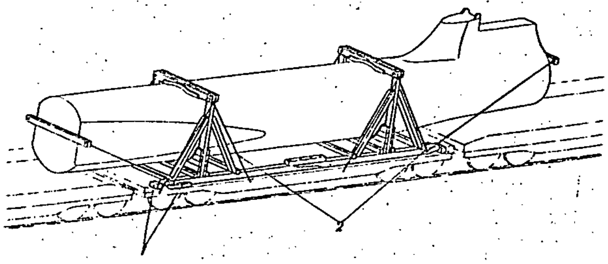

FIG. 165. PLACING TAIL SECTION IN CARCASS PACKING (COVER IS NOT SHOWN) ON FOUR-AXLE FLAT CAR AND SECURING IT IN POSITION
1 – blocks; 2 – bracing wire rope.

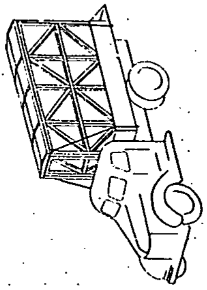

FIG. 166. TRANSPORTING PACKED UNIT BY TRUCK

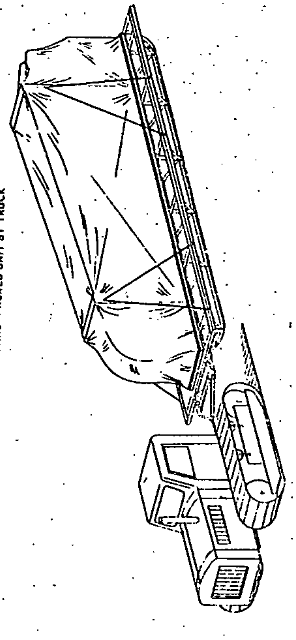

FIG. 167. TRANSPORTING PACKED UNIT BY SLEDGE

[redacted]

50X1-HUM

—304—

[redacted]

50X1-HUM

[redacted]

50X1-HUM

TU-16 AIRCRAFT

TECHNICAL DESCRIPTION

Book II

BOMBING EQUIPMENT

SECRET
NO FOREIGN DISSEM

[redacted]

50X1-HUM

Ty-16 AIRCRAFT
TECHNICAL DESCRIPTION
Book II
BOMBING EQUIPMENT

SECRET
NO FOREIGN DISSEM

[redacted]

50X1-HUM

Ty-16 AIRCRAFT

TECHNICAL DESCRIPTION

Book II

Part 2

BOMBING EQUIPMENT

[redacted]

50X1-HUM

The Book contains 124 pages and 68 figures on 26 sheets.

CONTENTS

[redacted]

Chapter I

GENERAL

The ТУ-16 aircraft is a high-speed long-range heavy jet bomber designed for bombing enemy strategic objects. For suspending and dropping bombs the aircraft has standard bombing equipment manufactured in accordance with the Specifications of the aircraft armament. For the purpose of bomb loading and dropping the aircraft is equipped with hoisting devices, bomb racks, actuating and interlock mechanisms of bomb release, bombsight, bomb release control instruments, and means of signalling and communication.

The ОПБ-11р bombsight, release control mechanisms, as well as a number of actuating and interlock mechanisms are mounted in the front pressurized cabin (See Fig. 1) within an easy reach of the navigator, the pilot and the navigator-operator.

The suspension devices, bomb racks, hoisting beams, bomb hoisting system and the bulk of actuating and interlock mechanisms are mounted in the bomb bay (See Fig. 2). The bomb bay is located in the fuselage between frames Nos 33 and 49. The aircraft is not equipped with means of external bomb suspension. The bombs are suspended from the fuselage bomb racks, groups 3 and 4, secured to the bomb bay sides. The set incorporates six group 3 racks КД 3-488 with shackles Дер 3-48 and four group 4 racks КД4-388 with shackles Дер 4-49.

[redacted]

The above racks serve to carry and drop bombs weighing from 250 to 3000 kg.

Table 1

Estimation of Aircraft Bomb Load

Nos	Bomb designation	Maximum number of bombs per aircraft
1	ОФАБ-100 НВ	24
2	ФАБ-250 М46	24
3	ФАБ-500 М46	18
4	ФАБ-3000 М46	2
5	ЗАБ-100-114	24
6	САБ-100-90	16
7	ФОТАБ-100-80	24

There are 12 attachment assemblies on the beam and 12 attachment assemblies on the fuselage top booms for mounting the bomb racks in the bomb bay. The assemblies on the beams serve to secure the racks at the bottom while those on the booms serve to attach them at the top.

In addition to the above lightened attachment assemblies are provided for putting the racks in the stowed position.

50X1-HUM

Table 2

Combat and Stowed Positions of Bomb Racks

Nos	Bomb suspension variants	Combat position		Bomb rack row No.	Stowed position	
		type of bomb rack installed	attachment assembly No.		type of bomb rack installed	attachment assembly No.
1	1 and 2	КД3	1 and 2	1		
		КД3	6 and 8	2		
		КД3	11 and 12	3		
				4	КД4	B and 14
2	4			1	КД3	1 and 2
				2	КД3	3 and 4
		КД4	5 and 7	3		
				4	КД4	10 and 12
				5	КД3	B and 13

Note: The bomb racks which are put neither in the combat nor in the stowed positions are to be kept as detachable equipment.

[redacted]

50X1-HUM

Table 3

Bomb Load Variants

Variant No.	Type of bomb rack	Number of bomb racks	Attachment assembly No.			Calibre and type of bombs on the racks	Number of bombs per row	Total number of bombs	Total weight of bombs loaded, kg
			1st row	2nd row	3rd row				
1	КДЗ-488	2	1 and 2		11 and 12	САБ-100-90	8	16	1152
		3	1 and 2	6 and 8	11 and 12	ФОТАБ-100-80	8	24	1920
		3	1 and 2	6 and 8	11 and 12	ФАБ-250 М46	8	24	5280
2	КДЗ-488	3	1 and 2	6 and 8	11 and 12	ФАБ-500 М46	6	18	7713
3	КД4-388	1	5 and 7			ФАБ-3000 М46	2	2	5966

When fixed in the stowed position to the attachment assemblies of the rear row, the right-hand rack is mounted on the port side while the left-hand rack is installed on the starboard side. Hoisting of bomb racks is effected by the hoists, type БЛ-47 ЭМ. All the bomb racks of the same pattern are easy to detach or interchange.

In accordance with the given bomb load variants the КДЗ-488 and КД4-388 bomb racks can be mounted in one, two or three rows.

The attachment assemblies in the bomb bay provide for the following bomb load variants:

1. Six four-shackle КДЗ-488 bomb racks with the Дер 3-48 shackles to carry the following bombs: ФОТАБ-100-80, ФАБ-250 М46, ФАБ-500 М46; ФОТАБ and САБ-100-90.
2. Two КД4-388 bomb racks with the Дер 4-49 shackles to carry ФАБ-3000 bombs.

Bombs are hoisted to the bomb racks by means of БЛ-47 ЭМ electric hoists.

Bombs up to 250 kg can be lifted with one hoist; those from 500 to 3000 kg, with two hoists.

To hoist bombs and bomb racks the hoists are attached to the brackets installed on the bomb door butt ends. With bombs loaded in accordance with the bomb load variants, the bomb-bay dimensions provide a safety angle of bomb exit equal to 10° (See Fig. 3), the smallest clearance between the suspended bombs and the closed bomb-bay doors amounting to 30 mm and over. The clear openings of the bomb bay without and with the bomb racks mounted are 6674.5x1632$^{64.5}$ and 6674.5x1330 mm respectively.

The ОПБ-11р bombsight connected with the АП-5-2М automatic pilot system and the РБП-4 radar bombsight provides for bombing under any weather conditions (day or night).

The ОПБ-11р bombsight is used for sighting and releasing bombs in level flight at moving and stationary targets with an arbitrary approach to the target. When the target is visible,

[redacted]

the sighting is done with the assistance of the telescopic and collimator optical systems. When the target is not visible, use is made of the РБП-4 radar sight, sighting being effected relative to the image on the radar cathode-ray tube screen with the application of the sight computing mechanisms.

The aircraft has an electrical remote bomb release control system with combat and emergency circuits.

The combat bomb release control system has an independent electric wiring with terminals in the bomb rack actuating mechanisms.

The emergency bomb release control system, in its turn, can be divided into two types:

(a) emergency release with power supplied from the mains of the aircraft;

(b) emergency release with the mains of the aircraft de-energized, in which case power is supplied from the storage battery mounted in the aircraft.

Each type of emergency release control system has an independent electric wiring.

Table 4

Bomb Equipment Weight in Maximum-Range Flight with Bomb Load of 3000 kg (assumed for calculations)

Nos	Description of bomb equipment	Number required	Weight of unit, kg	Bomb equipment weight on the ground, kg	Bomb equipment max.weight in flight, kg
1	2	3	4	5	6
1	ФАБ-250 suspended from КД3-488 bomb rack	12	-	244.2	205.6
	(a) КД3-488	4	42	168	168
	(b) shackles	12	3	36	36
	(c) hoists	2	19.2	38.4	
	(d) attachment bolts	8	0.2	1.6	1.6
2	ФАБ-500 suspended from КД3-488 bomb rack	6		144.2	96.8
	(a) КД3-488	2	42	84	84
	(b) shackles	4	3	12	12
	(c) hoists	2	19.2	38.4	
	(d) hoisting beam	1	9.0	9.0	
	(e) attachment bolts	4	0.2	0.8	0.8
3	ФАБ-3000 suspended from КД4-388 bomb rack	1	-	220.95	87.05
	(a) КД4-388 bomb rack	2	77.5	155	77.5
	(b) shackle	1	8.75	8.75	8.75
	(c) hoists	2	19.2	38.4	
	(d) hoisting beams	2	9.0	18.0	
	(e) attachment bolts	4	0.2	0.8	0.8

x) The bomb is suspended from one КД4-388 bomb rack of the starboard side (attachment assemblies 5 and 7).

The combat bomb release control system is the principal one. Together with the bombsight, intervalometer and rack selector it makes the choice of train and interval.

The combat bomb release is ARMED only.

Bombs are released in train, one or two bombs per salvo,

[redacted]

depending on the position of the switch on the bottom bomb release panel, or selectively (non-automatic), one or two bombs per salvo.

The linear interval (spacing) between the bombs at combat release can be set on the ЭСБР-49А electric intervalometer from 3.5 m. to 3.6 km. (ground speed ranging from 300 to 1300 km/hr).

The emergency release control provides for ARMED and SAFE release with electric power supplied from the aircraft mains, as well as from the battery.

In emergency bomb release all the bombs fall almost simultaneously, vertical interlocking of bomb shackle release units making the bombs fall from the КД3 bomb rack in succession of the stations starting with the bottom station as indicated in Figs 3 and 4. On the other hand, bomb release from the КД4 bomb rack is also performed almost simultaneously, but the succession is: from side to side, one bomb from each row.

In view of possible bomb collisions along the trajectory the combat release (or emergency ARMED release) of bombs with fuzes having no delayed cocking is forbidden.

The bombs can be released by the following crew members.

The NAVIGATOR, who can perform:

(a) combat release through the bombsight;

(b) combat release by the КСБ-49 bomb release button and the bombsight;

(c) emergency armed and unarmed release by the switch on the bomb release control panel.

The PILOT, who can perform:

(a) emergency ARMED or SAFE release by the emergency bomb release switch and the ARMED-SAFE selector on the pilot's instrument board;

(b) emergency ARMED or SAFE release from the bomb release control panel, with the mains being de-energized, and power supplied from the battery.

50X1-HUM

The NAVIGATOR-OPERATOR, who can perform:

Combat release by the КСБ-49 bomb release button, in which case all the bombing data are determined by the navigator.

The sequence of releasing bombs, the bomb stations on the racks and the connection of bomb racks to the plug connectors are shown in Fig. 4.

Bomb release in pairs does not alter the release sequence (the indicated order being always preserved): bombs 1 and 2 will be dropped first, bombs 3 and 4 after them.

Nose and base fuzes are controlled mechanically. The aircraft has two sets of fuze arming rods, type УВП, designed for locking fuzes of vane and arming-pin type, as well as fuzes with the МДВ delayed cocking mechanisms.

The electric hoists are controlled from a special portable panel which is incorporated in the set of the ТСУЛ (the trolley of the hoist control system) ground equipment.

The mechanism opening and closing the bomb-bay doors has an electrical remote control system subdivided into normal, stand-by and emergency. The drive for opening and closing the bomb-bay doors is fed from the main and brake hydraulic systems. Moreover, provision is made for a mechanical opening of the bomb-bay doors with the help of a spring. The hydraulic system is duplicated by the mechanical bomb-bay door control system which guarantees the opening of the bomb-bay doors in any case.

The normal opening and closing of bomb-bay doors is accomplished by the navigator through the main control system. In the stand-by control system the bomb-bay doors are opened by the navigator and closed by the pilot. The emergency opening of the bomb doors as resulting from the emergency bomb release is effected by the navigator and the pilot.

[redacted]

50X1-HUM

Chapter II

INSTRUMENTS AND ASSEMBLIES OF BOMBING EQUIPMENT

Location of Control Instruments

All control instruments of the bombing equipment are located within an easy reach of the crew in the front pressurized cabin, as shown in Fig.1.

Navigator's Compartment

1. The ОПБ-11р optical bombsight is mounted on the autopilot course stabilizer.

2. Navigator's left-hand panel (Fig.5) is mounted on the port side of the aircraft between frames Nos 2 and 5. The panel comprises the bomb release control panel, ЗСБР-49А intervalometer, bottom bomb release control panel, and navigator's automatic circuit breaker (АЗС) panel.

Mounted on the bomb release control panel (Fig.6) are the following items: the station status indicator lights, the П-4 switch to check the indicator lights for proper operation, the ВК2-142В button to check the presence of bombs (with the bomb-bay doors closed), the READY (ГОТОВ) signal light, the В-45 emergency bomb release switch, the В-45 emergency ARMED (ВЗРЫВ) switch, the В-45 switch of the rear КДЗ bomb racks disengagement relay.

Mounted on the intervalometer are the indicator light of power supply to the ЗСБР-49А intervalometer, METRE and KILOMETRE circuit switch, TRAIN (СЕРИЯ) and SELECTIVE (ОДИНОЧНО) switch, interval knob, handle of bombs to be released or salvoes, mounted on the bottom bomb release control panel (Fig. 7) are two 2В-45 relay switches 1 of the bomb release variant box and the В-45 salvo switch.

The navigator's automatic circuit breaker panel (Fig. 8) comprises the bombing equipment circuit breakers.

3. The navigator's right-hand control panel is mounted on the starboard side of the aircraft between frames Nos 2 and 4. The panel consists of the bomb door control panel and the navigator's circuit breaker panel.

Installed on the bomb-bay door control panel (Fig. 9) are the ПН-45 bomb door control switch, the СЛЩ-51 bomb door position indicator lights, the 2В-45 master bombing switch, the ARMED (ВЗРЫВ) position indicator light, the ВН-45 bomb door stand-by control switch.

Installed at the top of the navigator's right-hand control panel is the automatic circuit breaker panel (Fig. 10).

The КСБ-49 bomb release button is mounted on frame No. 2 above the navigator's right-hand control panel.

Pilot's Station

1. Mounted on the instrument board (Fig. 11) are the В-45 emergency ARMED (ВЗРЫВ) release switch, ARMED indicator light, navigator's В-45 emergency bomb release and ARMED circuit interlock switch.

The emergency bomb release control panel operating with the system being de-energized is mounted next to the engines starting box, at frame No.8. Installed on the panel are the В-45 ARMED (ВЗРЫВ) - SAFE (НЕВЗРЫВ) switch and the handle which opens the bomb-bay doors and releases bombs.

The ВН-45 switch to open the bomb-bay doors on the ground

[redacted]

when the mains is de-energized is mounted at frame No. 9 next to the emergency bomb release control panel.

2. The ВН-45 stand-by switch for closing the bomb-bay doors is mounted on the pilot's hydraulic control panel between frames Nos 6 and 7, along the aircraft axis.

Navigator-Operator's Compartment

1. The navigator-operator's instrument board (Fig. 13) is mounted on the port side of the aircraft between frames Nos 10 and 11. The КСБ-49 bomb release button and the READY TO DROP (ГОТОВ К СБРАСЫВАНИЮ) indicator light are mounted on the board.

2. The navigator-operator's electrical panel (Fig. 14) is installed on frame No.12, along the aircraft axis, on the navigator-operator's central control panel. Mounted on the electrical panel are the В-45 bomb-bay lighting switch, the АЗС-5 circuit breakers of the bomb-bay reflector dipoles and the circuit breakers of the auxiliary compartment reflector dipoles.

Detachable Equipment

The detachable equipment consists of the suspension equipment and the hoisting equipment.

The suspension equipment includes three right-hand and three left-hand bomb racks КД3-488 with the Дер 3-48 shackles; two right-hand and two left-hand bomb racks КД4-388 with two right-hand and two left-hand shackles, type Дер 4-49.

The hoisting equipment consists of four БЛ-473М electric hoists with cables 20 m. long, four brackets mounting the БЛ-473М hoists, hoisting frame, two right-hand and two left-hand КД3-547Н guides used for hoisting bombs, four ПК3-53 hoisting hooks, two frames with sheaves, two movable blocks,

a twin guy; two two-sheave end pulleys, two one-sheave end pulleys, hoisting sling 3000; four sheaved blocks to hoist the bomb racks, a hoisting cable, 8 mm in diameter, and 14.8 m. long, a hoisting cable, 8 mm in diameter, and 13.75 m. long.

In addition to the above, the following ground equipment is provided: a service ladder, two catwalks, two trolleys of the ТСУЛ-47Э hoist control system, six КУ-50 universal keys, two bags for fuze arming rods, 24 devices, type Н-116, for checking the Дер 3-48 shackles, the БТ-500 trolley to carry ФАБ-250 and ФАБ-500 demolition bombs, the БТ3-49 trolley to carry ФАБ-3000 demolition bombs.

Description of Assemblies

КД3-488 Bomb Rack

The КД3-488 bomb rack (Fig. 15) is provided for carrying and releasing bombs.

The bomb rack is designed for one of the following bomb suspension variants: four bombs of 250-kg calibre or three bombs of 500-kg calibre.

The bomb rack is equipped with the following:
five electromechanical bomb shackle release units ПБД-48;
five arming mechanisms МВН-48;
five interlock switch boxes БК-48М;
one plug connector ШР28П7НШ9.

The bomb rack set includes:
four shackles Дер 3-48;
two guides КД3-547Н;
one key КУ-50 to cock the ПЬД-48 release unit.

The bomb rack is connected to the bomb release control electric circuit by means of the ШР28П7НШ9 plug connector with the plug installed on the bomb rack and the socket on the side of the aircraft.

The bomb release (both combat and emergency) is effected

[redacted]

electromechanically . The bomb rack is furnished with all necessary equipment to ensure bomb release light indication, arming of the fuzes, automatic engagement of the shackle release units and arming mechanisms of respective stations (depending on the bomb load variant), group control of the latches during the bomb rack unloading, and an indication of the closed position of the latches.

The bomb rack consists of two shaped beams connected by means of three cross bars and a metal sheet.

The top and the bottom cross bars have two-sheave blocks each for bomb hoisting. Two tubes guiding the hoist cables are mounted between the bottom and the top sheaves on the back of the bomb rack.

The bottom and the middle cross bars are covered with steel plates, which protect the magnesium cross bars from damage and prevent jamming of the hoist cable. The shackles are held in the bomb rack by means of five pairs of latches mounted on each beam. Each latch unit consists of a catch, a pawl and a stop. The catch and the pawl are set on the same axle and connected by means of a spring. The pawls are interconnected by a linked rod, pivoted at the bottom to the control lever, whose nose rests against the roller of the lever connected to the unloading handle. The ПБД-48 release units are mounted on the forward beam, against each group of the latches; the МВН-48 arming mechanisms are mounted on the aft beam, and the БК-48М interlock switch boxes are installed on the sheet. The mechanisms indicating the closed position of the latches are placed inside the beams. Each of them consists of two levers set on the same axle. One lever with a roller rests on the extension of the latch upper stop, the other one carries a signalling pin fixed flush with the beam (with latches being locked). Each beam on the back side of the bomb rack has a bracket, which serves to secure the shackle in the stowed position when the bomb rack is loaded with bombs of 500-kg calibre (when one of the shackles is not used).

The latches operate as follows.

When the rack is being loaded the shackle trunnions moving along the bomb rack grooves press against the catches, which turn together with the pawls, and withdraw the upper stops, providing the possibility for the shackle to pass upward. After the shackle trunnions have travelled 6 to 8 mm upward from the suspension axis, the supporting latches return to their working position. When the shackle lowers upon the supporting latches, the upper stops actuated by their springs pass beyond the rail surface thus fixing the shackle. During the loading the control handles of the latches are in their top position and the control rods have no effect on the latches.

During the unloading the latch control handle is brought to its bottom position and the control rods travel downward to turn the latch pawls. The pawls cock the supporting latch springs and press the upper stops to go beyond the rail edge thus permitting to lift the shackle upward. The upward movement of the shackle is limited by the upper stop extensions.

When the shackle is being lifted, the springs cocked by the pawls sink the supporting latches beneath the rail edges thus permitting to lower the shackle.

The bomb rack is secured to the aircraft structure by means of four attachment assemblies located on the back side of the rack.

To install the rack in the aircraft the top pair of pins must be inserted into the holes of the assemblies mounted on the top horizontal beam. To the lower horizontal beam the bomb rack is secured by means of the lower pair of assembly units and easy-to-remove bolts.

КДЗ-488 Bomb Rack

Circuit Diagram

The bomb rack circuit (Fig.16) provides for two independent kinds of bomb release: combat and emergency both ARMED (ВЗРЫВ)

[redacted]

and SAFE (НЕВЗРЫВ).

When the shackles are installed in the bomb racks, the interlock switch box contacts become closed which corresponds to their left-hand position in the diagram.

For the combat bomb release a current pulse passes from terminal 5 of the plug connector to the БК-48М interlock switch box of the bottom station, and then to contact 3 of the ПБД-48 bomb shackle release unit.

The release unit operates, and as soon as the effect of the pulse is over, terminals 3 and 4 of the ПБД-48 unit plug connector close. The coil winding of the unit is cut out from the circuit.

Next pulse passing through the interlock switch box and closed terminals 3 and 4 of the ПБД-48 unit plug connector of the bottom station is fed to the top station of the bomb rack. Thus, the stations operate in succession until the bomb from the top station is dropped.

Depending on the bomb load variant, not all the stations may be loaded (load variant with demolition bombs, type ФАБ-500). In the latter case the shackles are removed from those stations, which do not carry bombs. The interlock switch box contacts are in the position indicated in the bomb rack circuit diagram.

The current pulse passes from terminal 5 of the plug connector to the interlock switch box of the bottom station. The release unit operates as is indicated in the preceding case. Next current pulse having passed through the closed contacts of the interlock switch box is fed to the top station release unit. Thus, the stations operate in turn until the bomb from the top station is dropped.

For emergency release power is supplied from plug connector terminal 4 to terminal 2 of the release unit emergency control, by-passing the interlock switch box. After the release unit has operated, contacts 2 and 1 close and the current passes to the next release unit. Thus, the stations operate in turn until all the bombs are dropped.

Each bomb rack in the aircraft has its indicator light. When all the bombs from the bomb rack are dropped the light goes out. The signalling is effected in the following way: current from terminal 2 of plug connector 2 flows to terminals 2 of interlock switch boxes 3. From the interlock switch boxes it flows to terminal 2 of МБН-48 arming mechanism 1. When the shackle operates the shackle pin comes out and presses upon the МБН-48 arming mechanism pin. If the МБН-48 arming mechanism pin travels 3 mm, the МБН-48 contacts get in touch with the pin insulation and the signalling circuit becomes broken.

The bombs from the bomb rack may be released either ARMED (ВЗРЫВ) or SAFE (НЕВЗРЫВ). In the former case current from terminal 1 of plug connector 2 flows to terminal 1 of МБН-48 arming mechanism 1. The electromagnet operates and the longer arm of the mechanism core prevents the МБН-48 arming mechanism pin from further travelling.

When the shackle pin presses against the МБН-48 mechanism pin, the pin travel is limited to 3 mm, which provides for proper fixing of the ring of the УВП arming wire in the shackle.

In the latter case current is not supplied to the electromagnetic coil of the МБН-48 mechanism and the МБН-48 arming mechanism pin may travel 14 or 15 mm when pressed by the shackle pin. Such a distance is quite sufficient to let the ring of the УВП arming wire fall from the shackle.

КДЗ-488 Bomb Rack Main Data:

Release unit-to-shackle minumum operating time .... 0.025 sec.
Bomb rack dimensions, mm 1618x590x235

КД4-388 Bomb Rack

The КД4-388 bomb rack (Fig. 17) is intended for carrying and releasing bombs.

The bomb rack is designed to carry one bomb of 3000-kg calibre, or two bombs of smaller calibres.

[redacted]

The КД4-388 bomb rack has the following equipment:

four electromechanical bomb shackle release units ПБД-48;
four arming mechanisms МВН-48;
four interlock switch boxes БК-48М;
one plug connector ШР48П20НШ1;
four sockets ШК-М;
two shackles Дер 4-49.

Note: When necessary, the КУ-50 key is taken for use from the КД3-488 set.

The bomb bay of the aircraft is equipped with four bomb racks (two right-hand and two left-hand racks).

The bomb release control is electromechanical (both combat and emergency).

The bomb rack is connected to the bomb release control system by means of the ШР48П20НШ1 plug connector. The bomb rack has a plug to be inserted into the socket placed on the side of the aircraft.

The bomb rack is furnished with all necessary equipment to ensure bomb release indication, bomb fuzes control, automatic cutting-in of the release units and arming mechanisms МВН-48 of the corresponding stations, depending on the bomb load variants, group control of the latches during the bomb rack unloading, and indication of closed position of the latches.

The bomb rack is a rigid frame consisting of the forward and aft beams connected by means of a duralumin sheet and two cross bars.

Mounted on the bottom and top cross bars are guiding sheaves for the bomb hoist cables. Two tubes mounted behind the sheet serve as conduits to bring the cables from the bottom to the top pair of sheaves.

The cross bars are equipped with steel coverings, which protect magnesium cross bars from damage and prevent the hoist cable from jamming in the cross bars.

In order to hold the shackles in the bomb rack four groups of latches are provided on the inner side of each beam.

50X1-HUM

The latch design and their operation are similar to the КД3-488 bomb rack latches described above. The bomb rack is secured to the aircraft in the same way as the КД3-488 bomb rack is.

КД4-388 Bomb Rack

Circuit Diagram

The bomb rack circuit (Fig. 18) provides for two independent kinds of bomb release: combat and emergency which are accomplished either ARMED (ВЗРЫВ) or SAFE (НЕВЗРЫВ).

Combat Bomb Release

With the shackles placed in the bomb rack, the interlock switch box contacts close (which corresponds to their right-hand position in the diagram).

According to the accepted bomb load variants not all the stations of the bomb rack may be loaded. Bombs are suspended from the bomb racks in such a way that loaded are stations 2 and 4 as counted from the bottom.

For combat bomb release a pulse sent from the ЭСБР-49А intervalometer through the rack selector to terminal 2 of the plug connector comes to the БК-48М interlock switch box of the bottom station. As the contacts of the bottom interlock switch box are closed, the pulse passes to the next interlock switch box. From the box current flows to terminal 3 of the ПБД-48 bomb shackle release unit. The unit operates, and after the pulse is over, terminals 3 and 4 of the ПБД-48 unit plug connector close. The coil winding of the unit gets disconnected from the circuit.

The second pulse sent to terminal 2 of the plug connector through the interlock switch box closed contacts, the ПБД-48 release units and terminal 1 of the bomb rack plug connector

[redacted]

passes to the bomb rack installed on the opposite side of the aircraft. Then the current pulse sent from terminal 8 of the bomb rack connector, through the interlock switch box closed contacts, passes to the terminal of the ПБД-48 release unit plug connector of the fourth station, thus making it operate.

The current pulse sent from terminal 8 of the bomb rack plug connector, through the interlock switch box closed contacts, the ПБД-48 release unit and terminals 13 of the bomb rack plug connector, actuates the ПБД-48 release unit of the fourth station of the opposite side. This is the way the bombs are released from each side in turn, one bomb from each row.

If the given bomb load variant leaves some bomb rack stations free, the vacant shackles should be removed. The interlock switch box contacts of these stations are in the position indicated in the bomb rack circuit diagram. The possibility is provided for the current to pass to the interlock switch box of the next station, by-passing terminal 3 of the ПБД-48 release unit.

Thus, the bomb shackle release unit of the station with the shackle removed will not operate and the bomb release time interval will not be affected.

Emergency Bomb Release

During the emergency bomb release power is supplied from terminal 10 of the plug connector to terminal 2 of the ПБД-48 release unit plug connector of the first station, by-passing the interlock switch box. The release unit operates and terminals 1 and 2 of the unit close. Then current is fed through the closed contacts of the release unit of the second station and terminal 11 to the bomb rack second station on the opposite side.

When current is supplied from terminal 12 of the bomb rack plug connector to terminal 2 of the third station release unit plug connector, the release unit operates and terminals 1 and 2 close. Then through the closed contacts of the third station release unit and terminal 9 power is supplied to the third station release unit of the rack on the opposite side.

When power is supplied from terminal 14 of the bomb rack plug connector to terminal 2 of the fourth station release unit plug connector, the unit operates and terminals 1 and 2 close. Then through the closed contacts of the fourth station release unit and terminal 15 power is supplied to the fourth station release unit of the bomb rack on the opposite side. In this way the emergency bomb release is effected (from each side in turn, one bomb from each row).

When the released bombs are ARMED, power is supplied to the terminals of the MBH-48 arming mechanisms through terminal 4 of the bomb rack plug connector. In this case all the MBH-48 arming mechanisms operate, and the shackle pin is limited to travel only 3 mm, which ensures a proper hold of the ring of the УВП arming wire in the shackle.

For the SAFE bomb release, power is not supplied to the MBH-48 arming mechanism magnet coil and the shackle pin may travel 15 mm and the ring of the УВП arming wire falls out of the shackle.

The bomb rack also sends signals indicating whether bombs are suspended. In this case power is supplied to the interlock switch boxes through terminals 3 of the plug connector and then to terminal 2 of the MBH-48 arming mechanism.

When the shackle operates, the pin of the MBH-48 arming mechanism travels 3 mm and disconnects the signalling contacts of the mechanism from the contact of the pin ring; they get to the insulated portion and the signalling circuit breaks.

Дер 3-48 Bomb Shackle

The Дер 3-48 bomb shackle (Fig.19) is a standard unit of the bomb equipment. The shackle is intended for carrying bombs of 50- to 500-kg calibre. The shackle provides ARMED or SAFE release of the bombs with the help of the ПБД-48 bomb shackle release unit and the MBH-48 arming mechanism.

The shackle is a frame holding a system of main and intermediate levers, rods and springs.

[redacted]

The ends of the shackle have trunnions by means of which the shackle is held in the latches.

The bottom portion of the shackle has three carrying hooks, two sway braces and arming wire retainer 13.

Middle carrying hook 15 is intended to hold 50-kg and 100-kg bombs having one suspension lug.

Extreme carrying hooks 10 and 17 serve to hold 250-kg and 500-kg bombs having two suspension lugs.

The forward and aft sway braces are intended to prevent swaying and to stabilize bombs having one suspension lug.

The arming wire retainer is used for securing the ring of the УВП arming wire.

The bomb shackle frame has a necked tube for installing the ПК3-53 hoisting hook when hoisting a bomb.

Inside bomb shackle forward trunnion 1 a trigger pin is provided. When the ПБД-48 release unit operates its pin strikes trigger pin 2, and the carrying hooks open (by gravity).

Inside the bomb shackle aft trunnion the arming wire retainer pin is located; it comes out of the trunnion when the carrying hooks open. When the MBH-48 arming mechanism is switched on, its pin prevents the movement of the retainer pin and the arming wire retainer of the bomb shackle remains closed and the arming wire ring is held in the retainer. The bomb is dropped set to ARMED (B3PHB).

When the MBH-48 arming mechanism is switched off, the arming pin of the bomb shackle makes a complete stroke to open the arming wire retainer which, in its turn, releases the arming wire ring. The bomb is then dropped set to SAFE (HEB3PHB).

Дер 4-49 Bomb Shackle

The Дер 4-49 bomb shackle (See Fig. 20) serves to carry and drop demolition bombs of 3000-kg calibre (ФАБ-3000).

The shackle is controlled with ПБД-48 electromechanical bomb shackle release unit 7 and MBH-48 arming mechanism 1.

The shackle consists of a rigid frame with trunnions projecting from the ends; the trunnions are intended to secure the shackle in the bomb rack latches. The arming wire retainer control mechanism is arranged in the forward section of the shackle. The mechanism consists of a system of levers, bars and springs. The carrying hooks control mechanism is located in the aft section.

The shackle rear boss has a stop to prevent the insertion of the bomb shackle into the bomb rack if the arrow direction on the shackle does not coincide with the direction of flight. The shackle is controlled with ПБД-48 release unit 7. When the release unit pin strikes shackle pin 6, trigger lever 8 releases shift lever 5. Forward carrying hook 14 and aft carrying hook 9 connected by hook connecting link 11 get also free, and carrying hooks 10 and 15 open forced by the springs and the bomb weight.

When the bomb drops, forward carrying hook 15 lets rocking arm 13 turn about its axis. If the MBH-48 arming mechanism is OFF, pin 2 actuated by spring 3 makes a complete stroke of 13 or 14 mm. The same spring actuates rocking arm 13 and arming wire retainer 12 releases the arming wire ring, so the bomb drops SAFE (HEB3PHB).

If the MBH-48 arming mechanism is ON, the pin movement is limited to 3 mm, and retainer 12 does not release the arming wire ring. In this case the bomb drops ARMED (B3PHB).

ПБД-48 Electromechanical Bomb Shackle Release Unit

The electromechanical bomb shackle release unit (Fig.21) releases the bomb shackles. The electrical control of the release unit provides combat and emergency opening of the bomb shackles.

The steel case of the release unit houses an electromagnet, a leverage, a spring and a contact system. The contact

[redacted]

system of the ПБД-48 release unit in conjunction with the БК-48Н interlock switch boxes and the КВСБ-48А bomb release variant box provides bomb release from the bomb rack in succession beginning with the bottom bomb.

The unit case has spline 3 provided for cocking the unit, a hole with releasing pin 4, and plug 5 whose socket is connected to the intervalometer circuit. When the release unit operates, releasing pin 4 opens the bomb shackle.

Operating voltage of the unit is 27 V ± 10 per cent. Minimum voltage to operate the release unit is 18 V. Voltage being 26 V at an ambient temperature of 20°C, current consumed by the electromechanical bomb shackle release unit is up to 6 A for the combat operation winding, and up to 9 A for the emergency operation winding. The distance for the pin travelling to operate the shackle is 14 or 15 mm. Effort exerted by the pin at the end of its stroke is 12 kg.

МВН-48 Arming Mechanism

The МВН-48 arming mechanism (Fig.22) operates in conjunction with the bomb shackles. It governs the leverage of the arming wire retainer and indicates bomb release.

The mechanism case 1 houses an electromagnet, pin 2 with a contact ring, and socket 3 to connect the mechanism to the electrical circuit.

The mechanism is controlled electrically. Operating voltage is 27 V ± 10 per cent. Minimum operating voltage is 18 V. Voltage being 24 V at an ambient temperature of 20°C, current consumed by the electromagnet is up to 0.2 A.

КДЗ-547Н Guide

The КДЗ-547Н guide facilitates the hoisting of 250-kg bombs to the КДЗ-488 bomb rack. The tongue of the guide is inserted into the bottom end of the beam of the КДЗ bomb rack and is secured with a special pin.

The aircraft is equipped with four guides (two right-hand and two left-hand).

The guide is a pressed shaped member whose bottom portion has steel rollers mounted on axles. In the process of hoisting the body of the bomb moves on the rollers and then slides along the steel covering of the shaped member to get into the rails of the bomb rack. After the bombs have been loaded, the guides are removed and put into a bag provided for the stowed position of the hoisting system parts.

Н-116 Insertion Piece

The Н-116 insertion piece is provided to check idle operation of the bomb shackles (without weights).

The aircraft is equipped with 24 insertion pieces, which are placed into the carrying hooks of the shackles. In the closed position of the carrying hooks the insertion pieces serve as suspension bands of the bombs.

The insertion piece consists of a U-shaped wire to the ends of which a steel rod is welded.

The insertion piece has a ring fastened to a cable. When the bomb release system is being checked the ring is secured to the arming wire retainer of the shackle.

Electrically Operated Signal Flare Launcher

General

The signal flare is used as a means of external signalling of the ТУ-16 aircraft.

For this purpose the aircraft is equipped with three electrically operated signal flare launchers (ЭКСП-39). Two launchers are installed on the starboard side between frames 20 and 22, and one launcher is installed on the port side between frames 21 and 22.

[redacted]

The electrically operated launcher is designed to fire four standard signal cartridges. The launcher is charged with signal flare cartridges from the outside. The signalling is performed in four colours: red, yellow, green and white.

The launcher provides firing singly or in train, one cartridge after another with an interval of 0.05 sec. and more.

The launcher is remotely controlled by electro-pyrotechnical means and is fed from mains of 27 V ± 10 per cent. The control is effected from the signal flare control panel (ПУР) placed on the navigator's right-hand control panel.

Previously installed ЭКСР-46 launchers firing standard 26-mm cartridges whose flare proved invisible from the earth in high-altitude flights are replaced with more powerful launchers, type ЭКСП-39, firing standard 39-mm cartridges.

The ЭКСП-39 launchers differ from the ЭКСР-46 launchers only in their calibre. The installation of the new launchers does not require any change in the wiring system of the aircraft.

Main Data of the ЭКСП-39 Launcher

Number of tubes for signal cartridges launcher	4
Tube size	39 mm
Number of screws to secure launcher to aircraft	4
Securing holes diameter	5.2 mm
Interval for firing singly and in train	not less than 0.05 sec.
Power supply from aircraft mains	27 V ± 10 per cent

ЭКСП-39 Launcher

The ЭКСП-39 electrically operated launcher (Fig.23) for signal flare cartridges of 39-mm calibre consists of two main

parts: casing 1 and a set of tubes with magazine 5.

The launcher casing consists of a shoe and a box and protects the set of tubes and the magazine from dust and mechanical damage.

The box bottom part has flange 4 to secure the launcher to the aircraft structure. Digits 1, 2, 3 and 4 stamped on the box flange correspond to the tube numbers of the launcher.

The box top part has shoe 2 with a contact panel and plug connector 3, which connects the wiring from the signal flare control panel (ПУР).

The set of tubes with the magazine consists of a launcher and a magazine. The launcher consists of four steel tubes fitted at top and bottom into duralumin frames.

The magazine is a shaped carbolite shoe with four sockets for the squib-initiated igniter. It serves to lock the launcher when it is loaded with signal flare cartridges.

The launcher and the magazine are hinged together and locked by means of a lock.

Signal Flare Control Panel

The navigator's right-hand control panel is equipped with three signal flare control panels (ПУР), as indicated in Fig.24, in accordance with the number of the ЭКСП-39 launchers. Each control panel is stencilled with letters A, Б, and B, which corresponds to the designations of launchers A and Б on the starboard side and launcher B on the port side of the aircraft.

Thus, each launcher has its own control panel.

The control panel is a metal case supporting four buttons and a switch. When the button head is turned, a colour indicator appears, which may be red, yellow, green or white, in accordance with the signal flare colour. The control panel buttons have digits 1, 2, 3 and 4, which correspond

[redacted]

to the launcher tube numbers.

The switch on the control panel turns the panel power supply ON or OFF.

ЭКСП-39 Launcher Control

When the launcher is loaded with signal flare cartridges (the colour indications on the control panel buttons correspond to the flare colours in the tubes) and the control panel switch is ON, the launcher is ready for firing.

The launcher is fired by pressing the buttons of the control panel (Fig.25). When a button (or the buttons) is pressed, a current pulse through the plug connector and the contact panel is sent to the plate contacts of the magazine, and then to the filament of the squib-initiated igniter. The explosive charge is ignited and, forced by the explosion, the striker pushes out of the squib to break the signal flare cartridge cap and to fire the tube.

Description of Instruments

ЭСБР-49А Intervalometer

The ЭСБР-49А electrically-operated intervalometer (Fig.26) provides control of the ПБД-48 release units of the bomb rack in combat bombing. The ЭСБР-49А intervalometer is designed to send from one to eighty current pulses with 24 kinds of time intervals ranging from 0.04 to 10 sec.

The intervalometer is used in conjunction with the КВСБ-48А bomb release variant box, the ИУ-50 spark extinguishing device and the В-45 salvo switch. The ЭСБР-49А intervalometer provides:

1. Automatic bomb release in train, by single bombs or in pairs per salvo, with number of bombs or salvoes up to 80 in train, the ground spacing between single bombs or pairs being from 3.5 m. to 3.6 km, and the aircraft ground speed ranging from 300 to 1300 km/hr.

The bomb equipment system of the aircraft permits the suspension of 24 bombs; therefore, no more than 24 pulses are used for releasing the bombs.

2. Non-automatic (selective) bombing, one bomb or salvo (two bombs per salvo) at arbitrary intervals depending on the frequency of the bomb release button pressing, or on the release circuit contacts matching in the ОПБ-11р optical bombsight.

3. Counting of bombs dropped.

The ЭСБР-49А intervalometer is mounted on the navigator's left-hand control panel (See Fig.6). The intervalometer is connected to the electrical system of the bomb release control by means of a seven-pin plug connector.

The face side of the intervalometer housing (Fig.26) is equipped with the following controls: the signalling light, counter unit knob with a pointer, dial indicating the number of bombs or salvoes (pairs) per train, bomb spacing dial, interval switching knob, ground speed indicator dial, M. - KM. range switch and the TRAIN (СЕРИЯ) - SELECTIVE (ОДИНОЧНО) switch.

Signalling light 1 serves to indicate the intervalometer readiness to operate. When the device is prepared for selective (non-automatic) pulse sending, the light begins to shine after the TRAINSEL toggle switch is set to the SELECTIVE position, and continues to shine all the time. When the intervalometer is prepared for automatic operation (train pulse sending), the signalling light begins to shine when counter knob 4 is set on dial 3 to indicate the number of bombs (salvoes) to be dropped in train, and goes out after the bombs are released.

The counter knob sets a given number of bombs or pairs per train on the dial. In order to set the counter for a given number of bombs or pairs per train, by turning knob 4 put the

[redacted]

pointer (connected to the knob) against the figure on the dial denoting the given number of bombs or pairs of bombs.

Dial 3, indicating the number of bombs or pairs of bombs, is intended to set the counter unit for a given number of bombs or salvoes (pairs). The dial has 80 divisions which correspond to the maximum number of pulses, sent out by the ЗСБР-49А intervalometer to the bomb shackle release units .

Dial 7, indicating ground bomb spacing, serves to set the interval switch for a given ground spacing between the bombs or salvoes released. The dial has a two-digit designation: the inner one, made in m. (first range), and the outer, made in km. (second range). The first range is designated M. (metres), the second one - KM. (kilometres).

Knob 6 of the interval control switch sets a given ground spacing of bombs on bomb spacing dial 7. In order to set the interval it is necessary to turn the knob in such a way that the given ground spacing designated on the bomb spacing dial should coincide with respective ground speed mark.

The interval control knob has twelve fixed positions. Each fixed position corresponds to two time intervals: one is in the "metres" range, the other, in the "kilometres" range.

Dial 5, indicating the aircraft ground speeds, serves to set the bomb spacing knob with respect to the ground speed.

M.- KM. range switch 2 serves to switch the intervalometer for the operation in one of the two ranges. When the range switch is set to M the intervalometer will operate in the first range, i.e. it will send pulses to the outer circuit with time intervals of 0.04 to 0.5 sec. These intervals correspond to the bomb ground spacing in the "metres" (M.) range of the bomb spacing dial. When the M.- KM. range switch is set in the "kilometres"(KM.) position, the intervalometer will operate in the second range, i.e. it will send pulses to the outer circuit with time intervals of 0.8 to 10.0 sec. These intervals correspond to the ground spacing in the "kilometres" range on the bomb spacing dial 7.

TRAINSEL toggle switch 8 sets the intervalometer to operate automatically or selectively. If the switch is in the TRAIN position, the intervalometer will operate automatically until the whole train is released when the КСБ-49 bomb release button is pressed.

If the switch is in the SELECTIVE position, the intervalometer may send only single pulses at each pressing of the КСБ-49 bomb release button, or at the closing of the release circuit contacts in the ОПБ-11р bombsight.

<u>КВСБ-48А Bomb Release Variant Box</u>

The КВСБ-48А bomb release variant box (Fig.27) is intended for distribution of the current pulses sent by the intervalometer to the ПБД-48 electromechanical bomb shackle release unit. The pulses are distributed between the bomb rack groups. The КВСБ-48А box controls two groups of release units and permits to drop bombs singly or in pairs.

The КВСБ-48А box is installed on the port side of the aircraft between frames 3 and 4. It comprises four electromagnetic relays, an eleven-pin plug connector, a plate, and a cover.

The electromagnetic relays are mounted on the plate.

The electromagnetic relays P_1, P_2, P_3 and P_4 (Fig. 28) are independently coupled. Each pair provides for electromechanical release unit control of a given bomb rack group, whose release units are connected in-series to the electric circuit.

The КВСБ-48А box is connected to the aircraft mains by means of an eleven-pin plug connector.

Each relay pair of the КВСБ-48А box is controlled by a separate switch, type 2В-45, installed on the navigator's panel. Power consumed by the КВСБ-48А box does not exceed 20 W.

[redacted]

50X1-HUM

КВСБ-48А Box Operation

One-Bomb-per-Salvo Bombing. B-45 salvo switch 3 on the navigator's bottom panel should be set to the one-bomb-per-salvo position (Fig. 28).

When the bomb shackle release units are cocked and switches 1 and 2 on the navigator's bottom panel are ON, the plus of the aircraft mains through pins Б and В of the plug connector of the КВСБ-48А box, contacts 8 - 10 and 18 - 20 is fed to electromagnet coils $B_1 - A_1$ and $B_3 - A_3$ of relays P_1 and P_3 and further through Д and В pins of the plug connectors via the releasing electromagnet windings of the cocked release units is fed to the minus. Relays P_1 and P_3 will operate to bring the contacts to the left-hand position (Fig. 28 shows the contacts in the extreme right position). The bomb shackle release units do not operate, as the current in the releasing electromagnet windings is too weak due to the high resistance of windings B_1 and B_3 (voltage being 27 V, current in windings B_1 and B_3 is 0.2 A; in order to operate the release units current intensity should be 5 or 6 A).

The first current pulse from the ЭСБР-49А intervalometer through pin Г of the plug connector the КВСБ-48А box, contacts 2 - 3, via the low ohmage winding A_1 of relay P_1 and pin Д of the plug connector is sent to the first (by the order of operation) ПБД-48 release unit of the first bomb rack group. In these circumstances the release unit operates.

At the same time the current pulse through closed contacts 4 - 5 is sent to winding B_2 of relay P_2 and to the circuit minus through pin К of the plug connector of the КВСБ-48А box. Relay P_2 will operate to open contacts 8 - 10 and to close contacts 8 - 9. When contacts 8 - 9 close, power from switch 2 is supplied to winding A_2 (relay P_2) connected to minus through contacts 6 - 7 and 16 - 17 of relays P_1 and P_3 connected in parallel. Contacts 8 - 10 will open and de-energize winding B_1 of relay P_1; the contacts of relay P_1 will be held in a closed position by the current passing through winding A_1 until the end of the power supply from the intervalometer actuating relay to the release unit. Relay P_1 being de-energized, the contacts are brought to the right-hand position.

The armature of relay P_2 will be held drawn in by the current flowing from switch 2 to the circuit minus through plug connector pin Б, contacts 8 - 9, winding A_2 of relay P_2, contacts 16 - 17 and via pin К of the plug connector of the КВСБ-48А box.

The second current pulse is sent out to the ПБД-48 release unit (the one which is first to operate) of the bomb rack second group through pin Г of the plug connector of the КВСБ-48А box, contacts 2 - 1 and 12 - 13, through winding A_3 and then via pin Е of the plug connector to the release unit winding.

After the second pulse is over, relay P_3 of the КВСБ-48А box will release contacts 16 - 17 to open the negative circuits of windings A_2 and A_4 of both relays. Relays P_2 and P_4 simultaneously release contacts 8 - 9 and 18 - 19 to close contacts 8 - 10 and 18 - 20. Windings $B_1 - A_1$ and $B_3 - A_3$ of the four relays become energized again.

Relays P_1 and P_3 operate simultaneously and prepare the КВСБ-48А boxes to a new operating cycle.

Thus, current pulses are distributed in turn between two control circuits of bomb shackle release units providing for one-bomb-per-salvo bombing for two groups of the bomb racks.

If all the bombs from one of the bomb racks are dropped, or one of switches 1 or 2 is in the OFF (ВЫКЛЮЧЕНО) position, the bombs will be dropped only from one group of bomb racks.

Two-Bombs-per-Salvo Bombing. The salvo switch is set to the two-bombs-per-salvo position (the switch contacts are

[redacted]

50X1-HUM

closed). When the bomb shackle release units are cocked and switches 1, 2 are ON, relays P_1 and P_3 of the КВСБ-48А box operate and close contacts 2 - 3, 4 - 5, 6 - 7 and 12 - 13, 14 - 15, 16 - 17.

A current pulse is sent out to the release unit winding of the first bomb rack group through pin Г of the КВСБ-48А box plug connector, contacts 2 - 3, winding A_1 of relay P_1, and then through pin Д of the КВСБ-48А box plug connector.

At the same time a current pulse is supplied from pin Г to the release unit winding of the second group of bomb shackles through pin И of the КВСБ-48А box, salvo switch contacts, pin Ж of the КВСБ-48А box plug connector, contacts 12 - 13, winding A_3, relay P_3 and then through pin Е of the КВСБ-48А box plug connector.

Thus, the pulse is simultaneously supplied through pin Г to the first relay and through pin Ж to the third relay of the КВСБ-48А box, which will provide a simultaneous supply of pulses to the two electromechanical bomb shackle release units.

Spark Extinguisher ИУ-50

The ИУ-50 spark extinguisher (Fig. 29) is intended to diminish sparking on the contacts of the electrical bomb release actuating relay. The ИУ-50 spark extinguisher is placed on the port side of the aircraft in the area of frame No. 4.

The ИУ-50 spark extinguisher consists of two main elements: a fixed capacitor, type КМБГ-100 μF, 250 V, and a D.C. electromagnetic relay with four groups of contacts.

Both of these elements are mounted on the same plate and are connected to the intervalometer by means of an eleven-pin plug connector. The spark extinguisher is protected by a cover.

Operating voltage does not exceed 18 V; power consumed is not over 10 W.

Spark Extinguisher Circuit Diagram and Operation

The capacitor (Fig. 30), intended to diminish sparking, is connected in parallel by a power contact of the intervalometer actuating relay. One lead is connected to plus through pin Ж, while the other one is connected to the intervalometer through pins 3 and И.

Thus, self-inductance e.m.f. generated when the ЭСБР-49А intervalometer actuating relay contacts are breaking will charge the capacitor. Consequently, the energy generated in the contact resistance diminishes, preventing burning of the contacts.

Electromagnetic relay 2 with contacts connected to terminals В, Г, Д and Е is not used during the bombing equipment electric circuit operation.

Bomb Release Button КСБ-49

The КСБ-49 bomb release button is intended to switch on the intervalometer for train or selective bombing.

The bombing equipment circuit has two КСБ-49 buttons; one of them is installed above the navigator's right-hand control panel, while the other is installed on the navigator-operator's instrument panel.

The КСБ-49 bomb release button (Fig. 31) consists of base 3, block 5, wire 4, КВ-6А switch 6, button 7 and cap 1. Wire ends are soldered to the switch leads and are tied with thread 2 to the block in order to prevent breaking in the soldered points.

Pressing the button closes the circuit. When the button is released the circuit opens. The button construction provides an instantaneous closing and opening of the contacts.

[redacted]

50X1-HUM

Chapter III

DOOR CONTROL SYSTEM

Bomb-Bay Door Control System

The bomb-bay doors are provided with normal, stand-by and emergency control systems.

The normal bomb-bay door control is effected through a hydraulic drive operating from the main hydraulic system of the aircraft.

The stand-by bomb-bay door control is resorted to when the aircraft main hydraulic system is inoperative and is accomplished by coupled springs to open and by a hydraulic drive, operating from the aircraft hydraulic brake system, to close the door.

The emergency bomb-bay door control system is used for an emergency bomb release. It provides only for door opening and is accomplished by coupled springs.

The main units of the door control system are installed between frames Nos 33 and 49 (Fig. 32).

The forward reel on the rear side of frame No.33 is mounted on a steel shaft (installed on a bracket), on the bottom panel and the rear spar of the centre main plane. The reel (Fig. 33) is made of magnesium alloy MЛ5-TA. It is a large disc with two grooves for the cable. On the back side of the disc there is a sector lug of a smaller diameter with a cable groove and two arms with ball bearings (in the bottom and top right-hand portion). In the top portion of the disc a lever is bolted; the lever is stamped of aluminium alloy AK-6. The stamped lever is connected to hydraulic drive rod 1, the other two, to rods 5. Besides, the reel has a hole to attach the limit switch control rod.

The limit switches are assembled in a box installed in the bomb bay.

The opposite ends of the rods are secured by easy-to-remove hinge pins to the assemblies on the bomb-bay door butt ends.

The rear reel is mounted on the steel shaft, on the front side of frame No.49. The reel cast of magnesium alloy MЛ5-TA has two grooves for the cable on the larger disc and two levers with ball bearings on the right-hand side (looking forward) and at the bottom, on the front side of the disc. The reel arms via the rods are connected to the attachment assemblies on the bomb-bay door rear butt ends by means of easy-to-remove pins.

Two connecting cables 3 run from the larger disc of the forward (driving) reel to the starboard side of the aircraft. A cable, 8 mm in diameter, running from the top portion of the disc, is connected with a cable of the same diameter running from the bottom portion of the rear reel disc. A cable, 4.5 mm in diameter, running from the bottom portion of the disc, is connected with a similar cable running from the top portion of the rear reel disc. This kind of cable connection makes both reels revolve in one direction. The turnbuckle connections of the cables are at frame No.44.

The pre-tension of the 8-mm cables amounts to 250 kg. It is measured with the TP-1 strain gauge.

The sheave blocks of connecting cables 4 are located on the right-hand side of the rear spar of the centre main plane and frame No.38, as well as on the starboard side at frame No. 49.

[redacted]

Running from the bottom portion of the sector lug of the forward reel is cable 6, 8 mm in diameter. This cable passes round the sheaves mounted on the brackets which are fixed to the skin on the inner side of the bomb bay and on the engine side horizontal wall of the left beam, at frame No.36; it has a turnbuckle connection with the forward cross bar of two coupled springs 8 (See Fig.32). The rear cross bar of the springs (Fig.34) is bolted to a nipple which at its rear end has a hexagon joggle and an internal thread. The threaded end of the rod with the hexagon head is screwed into the nipple. The smooth cylindrical part of the rod enters an angular thrust ball bearing, its hexagon head being supported by the inner ring of the ball bearing. The ball bearing is pressed into a steel cup inserted into the conical portion of the hole in the bracket which is secured to the beam horizontal wall at frame No.40.

The springs are made of wire, 12 mm dia. The wire is of steel 50ХФА, heat-treated to acquire a strength of 160 - 180 kg/mm^2.

The springs are wound in opposite directions of wire of the same lot and have identical heat treatment.

The principal use of the springs is the stand-by and emergency opening of the bomb-bay doors. In opening the doors through the normal control system (with the help of the hydraulic drive) the springs increase the speed of opening of the doors by adding to the force which draws out the hydraulic drive rod.

The initial total force applied by the springs to bomb-bay doors is from 1500 to 1650 kg while in the extreme open position (with the hydraulic drive rod fully extended) it amounts to 550 or 620 kg. Since the force of the springs is considerable it is dangerous to be within the reach of bomb-bay doors motion when the doors are opened or closed.

The disconnection of the hydraulic drive from the reel pin or from the bracket on the port side of the fuselage must

be done only when the doors are securely fixed in the open position with a spacer placed at the forward butt ends.

The bomb-bay doors are held in the CLOSED position by the ball lock of the hydraulic drive, their outer surface aligning with the shape of the fuselage.

With the bomb-bay doors in the OPEN position, the piston of the hydraulic drive reaches the stop and the rods take a position in which the axes of the bolts fastening them to the reel pin lie on a straight line connecting the axes of the bolts fastening the rods to the doors with the axis of the reel, or they lie farther than the straight line, i.e. farther than the "dead point". The distance between the door bottom edges (along the skin) at the forward and rear butt ends must equal 2070_{-100} ; the distance from the aircraft axis (determined by plumb weights hanging from the axes of rotation of the reels) to the door bottom edges must be 1035_{-50}.

For adjusting the tension of the springs there is a mark made in red enamel on the front cross bar of the engine side. On the top edge of the left beam skin, on the engine side two more red marks are made pointing the OPEN and CLOSED positions for the forward cross bar of the springs.

The tension of springs 1 is adjusted by adjusting rod 7 of rear cross bar 6 and cable turnbuckle connection 4 of front cross bar 5.

Adjustment and inspection of these joints is done through two access holes in the fuselage skin above the left-hand beam, between frames Nos 36, 37 and 39. 40. The box for limit switches is mounted on frame No.33. The construction of the box installed in the aircraft of later make is shown in Fig. 35, Б. The box consists of housing 7, covers 22, 23, 24 and nine limit switches 1, 2, 3, 5 (two pcs), 6 (two pcs), 8 and 10.

The limit switches (eight of them are of BK2-142B and one of BK2-141B-type) are mounted in the box.

[redacted]

50X1-HUM

Every cover is attached by means of a pin fixed in lugs 4 of housing 7 and has an actuating roller.

When the roller is pressed, the cover revolves around the axis of suspension and presses the limit switches stems to put them in the OFF position.

When the actuating roller is released, the cover returns to its original position. The roller is pressed against the cover by the contact wedges of carriage 11 connected via the rod with the forward control reel of the bomb-bay doors.

When the forward reel is revolving, the carriage performs a motion of translation and with its wedges 14, 15 and 16 via rollers 17, 18 and 19 presses against the corresponding covers. With the doors fully closed (Kinematic Diagram I), the carriage with its wedge 16 via roller 19 pushes cover 22 to bring limit switch 1 into the ON position which indicates that the doors are closed, the remaining switches being in a free position.

When the angle of the door opening is 68 ± 3° (Kinematic Diagram II) the carriage with its wedge 15 presses cover 23 via roller 19 thereby switching on limit switch No.3 which interlocks the emergency bomb release circuit (with the aircraft mains de-energized). The remaining switches are free.

Switch 3 remains depressed until the bomb doors get fully open.

With the doors fully open (Kinematic Diagram III), carriage wedge 14 pushes cover 24 via roller 17 thus actuating the relay preparing the combat bomb release circuit to be closed by switches No.4 and No.5, open door indicator lights circuit to be closed by switch No.2, the autopilot interlocking relay ON position circuit to be closed by switch No.8, the emergency release ARMED circuit interlocking relay to be closed by switch No.9, and closing the emergency release relay by switches No.6 and No.7; in this instant limit switch No.3 is in the depressed position being held by roller 19 of cover 23.

Switch No.1 of the door closed position indication circuit is not pressed. A reliable closing of the relay preparing the combat and emergency release circuits is ensured by introducing two switches in each box; the switches are energized from the aircraft mains through independent wires equipped with circuit breakers (A3C).

With oval slots 9 the box is adjusted in the box lugs which provide for a vertical shifting of the box. The final position of the box is marked with red paint, the box being secured by screws. The limit switches are adjusted by screws 21 mounted on the covers.

During the adjustment the following should be achieved:

(a) 1.5 - 3 mm travel of each switch button after its tripping (which is indicated by a click), with covers depressed;

(b) operation of switches 5 prior to that of switches 6.

<u>Note</u>: Due to a delay in the current flow to the arming mechanism simultaneous operation of switches 5 and 6 is not permissible because the bombs would be released SAFE although the system has been prepared for emergency ARMED release.

The adjustment over, screws 21 are locked by wire 20.

In the aircraft of earlier make every box has seven limit switches of BK-2-142B type (See Fig. 35, A), the construction of the boxes being identical.

When pressed, the switches close the circuits of the bomb-bay door position warning lights during combat, emergency or top emergency bomb release.

The limit switches are mounted in such a way that when pressed by covers 22, 23 and 24 their limit screws 25 and 26 do not reach the edges of slot 27 leaving a space of 0.5 to 1.0 mm; the button of switches 5 and 6 (top button) must be pressed by 1 - 2 mm, the buttons of switches 1, 2 and 3 - by 1.5 - 3 mm, the button (bottom) of switch 6 - by 2 - 3.5 mm after its tripping (which is indicated by a click). The indicated positions of the covers must provide for an

[redacted]

50X1-HUM

additional free travel of at least 3 mm for switches 5 and 6 (top), at least 2 mm for switches 1, 2 and 3, and at least 1.5 mm for switches 6 (bottom).

<u>CAUTION</u>: The adjusted box must ensure the operation of switches 5 prior to that of switches 6. This is done by placing washers, 0.5 and 0.8 mm thick, between the housing and the bodies of switches 6.

A bench-tested box is mounted in the aircraft in such a way that, with the bomb-bay doors closed, limit screw 26 cannot reach the ends of the slot in angle-piece 27 leaving a margin of 0.5 - 1 mm.

When the bomb-bay doors are being opened switches 5 and 6 operate when the doors get 1650 mm apart.

If one of the limit switches is inoperative, the box must be dismounted, the switch replaced and checked in accordance with the requirements given in this Section. The mounting of the limit switch is determined correct when the free travel of its stem is within the required limits. The travel is checked as follows:

1. Push cover 24 to reach a position in which limit screw 26 is 0.5 - 1 mm short of the slot end.
2. Sink a feeler gauge, 1.2 mm thick, into the hole under switch 6 (top button) and make a mark on the feeler gauge.
3. Press the button with the feeler gauge as far as it will go and make a second mark on the feeler gauge.
4. Measure the distance between the two marks. It will be the free travel.
5. In a similar way measure the free travel of switches 5 (middle), 6 (top), and 3.
6. Make sure that a special 1.5-mm thick feeler can be put between the button on the cover and the button of switch 6 (bottom).
7. Determine the free travel of switches 1 and 2 in the manner described for switch 6 (bottom).
8. If the free travel is less than that tolerated, insert washers between the box and the switch case in accordance with the requirements outlined in the Caution of this Section.

<u>Note</u>: In this type of aircraft use must be made of only such limit switches which have a free travel of not less than 5 mm after tripping (click).

Hydraulic Drive of Bomb-Bay Door Control System

The hydraulic drive (Fig. 36) of the bomb-bay door control system serves to open and close the bomb-bay doors. The drive incorporates an actuating cylinder and an emergency mechanism. Elbow-shaped connection 42 connects the actuating cylinder with the line of closing. Elbow-shaped connection 21 connects the actuating cylinder with the line of opening. Ball lock sleeve 13 with spring 17 slides within the cylinder barrel. The sleeve end contacting the balls is centred. The other end of the sleeve has a bead which rests against the ring joggle of the body when the ball lock is closed. The sleeve chamber accommodates bush 12 with nut 15. The bush bead rests against the sleeve ring joggle and is secured by a retaining ring, which, being set in the sleeve groove, rests against the end of the bush and prevents it from travelling in the axial direction. In the groove of the outer surface of the bush a rubber ring is placed. By means of the bush and the nut the sleeve is connected with rod 16 which, with its ball-shaped end, enters the bush and rotates freely in the spherical seat of the nut. The sleeve spring permanently holds the sleeve in the locked position. Nut 18 has a fork-shaped slot where lever 20 is attached; one end of the lever is connected with rod 16, while the other is connected with the emergency mechanism rod fork. The hydraulic drive is secured to the eye-bolt of the second spar of the centre main plane with the help of fork 19.

The rod of actuating cylinder 6 is a tube whose one end

[redacted]

50X1-HUM

is threaded to eye-bolt 1, thus connecting the rod with the forward reel on frame No.33. Piston 7 is put on the rod other end and locked by check nut 9. The sealing between the piston and the cylinder face is effected through rubber ring 8. Fourteen equidistant radial holes for the lock balls are drilled in the piston. On the piston side the rod is blanked off with plug 10 having a rubber gasket. Check nut 9 and plug 10 are locked to the rod by a retaining ring. Cylinder 29 of the emergency mechanism is a tube with male threaded ends and with an external hexagon flange to receive a wrench for supporting the cylinder when nut 36 and cover 27 are screwed. From one side barrel 37 secured by captive nut 36 is inserted into the cylinder. T-piece 38 is screwed into the threaded hole of the barrel to attach the piping.

Fixed on rod 23 is piston 33 travelling in barrel 37. When the bomb doors close, stop 25 of the emergency mechanism is held by release lever 26. Spring 31 enclosed in the emergency mechanism cylinder rests with one of its ends against piston 35 whose one end rests against the bead on bush 32 and the other end bears against the wall of cover 27. The rod travel is limited by stop 28 and bush 32 bolted on the rod. Release lever 26 is bolted to two cheeks in the bottom portion of cover 27, one of its ends having a roller and the other having a lug. The release lever contacts stop 25 with its roller and is connected to spring 22 by its lug.

Fig. 36 shows a cocked position of the emergency mechanism (spring 31 is compressed).

Bracket 41 made of elektron unites the actuating cylinder and the emergency mechanism to make them a single unit.

The actuating cylinder and emergency mechanism are inserted in semi-circular recesses of the bracket and are secured by clamps.

To prevent the bracket turning about the longitudinal axis of the actuating cylinder the bracket is mounted on a guide bar which fits in the grooves on the outside surface of the actuating cylinder and on the semi-circular surface of the bracket. Emergency and stand-by electric release units 39, type ЭЛС-1, are mounted and secured by pins to platforms on both sides of the bracket. The rod of each unit through a bell crank and a link is connected with emergency mechanism release lever 26. Spring 22 holds release lever 26 in a position that the lever bears against rod 23 of the emergency mechanism, while stop 25 of the rod rests on the roller.

Basic Specifications

Full travel of actuating cylinder piston	400 ± 0.5 mm
Full travel of emergency mechanism piston	28 ± 0.5 mm
Full travel of ball lock sleeve	8 ± 0.5 mm
Sleeve travel required to open ball lock	5.7 mm
Pressure required to open ball lock	from 6 to 9 kg/cm^2
Back pressure required to close ball lock	at least 3.0 kg/cm^2
Effort of electric release unit	not exceeding 12 kg

Normal Control of Bomb-Bay Doors

The normal control of the bomb-bay doors is effected by the ПН-45 switch (Fig. 37), mounted on the bomb-bay door control panel at the navigator's station, and automatically, by the target-warning mechanism of the ОПБ-11р bombsight.

To open the bomb-bay doors the normal control system functions as follows.

The ПН-45 switch being put in the OPEN (ОТКРЫТ) position and held so until the lamp indicating the door opening lights up on the panel, voltage is supplied to the ЭМ-12 electromagnet of the main hydraulic valve of the bomb-bay door control. The electromagnet operates to shift the slide valve of the hydraulic control valve downward. The hydraulic fluid from the main hydraulic system via the control valve (Fig. 38) and the slide valve distributor gets into the actuating cylinder. Since the piston, with the doors closed, is locked by the ball lock, the hydraulic fluid delivered to the actuating cylinder shifts the ball lock sleeve away from the piston and compresses the spring. The sleeve having been shifted, the balls locking the piston get released to move inside and unlock the piston, thereby enabling the latter to freely move and push the rod out of the cylinder. The rod moves out of the cylinder turning the forward reel. The turn of the forward reel (See Fig. 33) is transmitted to the aft reel by the connecting cables. When the two reels turn they make the rods attached to them open the bomb-bay doors.

The doors are fixed in the OPEN position by the rods as each pair of rods in conjunction with the reel makes a kinematic lock.

When the mechanism is in the normal operating position three hinges A, B, C (Fig. 39) lie in a straight line. The tolerable limit position of the mechanism is as follows: the deflection of the longer arm of the reel should not exceed 20 mm.

To close the doors by the normal control system the ПН-45 switch is put to the CLOSED (ЗАКРЫТ) position and held so for 5 - 6 seconds after the door closing indicator light comes on. In this case voltage is also supplied to the ЭМ-12 electromagnet of the main hydraulic valve. The electromagnet operates to shift the slide valve of the hydraulic valve downward. To close the doors the hydraulic fluid from the main hydraulic system via the control valve and the slide valve distributor passes to the hydraulic drive (through the closing pressure delivery connection). The piston is forced to move and draws the piston rod into the cylinder. The piston rod turns the reels to close the bomb-bay doors.

With the doors closed, the piston with its rod drawn into the hydraulic cylinder is locked by the ball lock thus holding the bomb-bay door in the CLOSED position.

Simultaneously with the closing of the bomb doors the twin springs of the stand-by and emergency bomb door control systems are cocked by the turn of the forward reel. When the bomb-bay doors are closed, the springs are permanently in the cocked position.

The automatic door control is effected through the target-warning mechanism of the ОПБ-11р bombsight. The target-warning mechanism warns of the approach of the bomb release point and at the same time sends a pulse into the ЭМ-12 electromagnet of the main hydraulic valve to open the bomb-bay doors. In this instant the system opens the doors in the same way as it does when controlled by the ПН-45 switch.

Operation of ЭМ-12 Electromagnet

The ЭМ-12 double-acting electromagnet is designed to effect the remote control of the hydraulic system valve operating the bomb-bay doors.

The ЭМ-12 electromagnet (Fig. 40) comprises cylindrical housing 4 where core 5 with pressed-in rod 8 travels. Pull-in coil 3 and push-out coil 6 are arranged in the housing. Since the magnet is intended for operation in a single-wire system one lead of each coil winding is soldered to the housing, whereas the other is brought out to plug connector 11. Screwed into the housing on both sides are top cover 9 and bottom cover 2 which attract the core. The same covers secure the coils to the housing. To adjust the covers adjusting shims 7 are put on the coils.

When power is supplied to the winding of the pull-in coil, the core shifts from its middle position (located by the slide valve springs) to the bottom cover of the electromagnet thus pulling in the rod. When the pull-in coil is de-energized, the return of the core to the middle position is effected by the slide valve springs. When the winding of the push-out coil is energized, the core is attracted by the electromagnet top cover thus pushing out the rod.

[redacted]

Basic Specifications of ЭМ-12 Electromagnet

Rated operating voltage	27 V
Double travel of core	14 + 0.29 mm
Initial tractive effort to move core from middle position in cold state, at 27 V and +20°C	at least 16 kg
Final tractive effort under above conditions	at least 25 kg
Tripping time	not over 1.5 sec.
Mode of operation	intermittent each winding being energized alternatively for 30 sec. (one cycle amounting to 1 min 16 cycles altogether
Weight	not exceeding 1.8 kg

Stand-By Control of Bomb-Bay Doors

The stand-by control of the bomb-bay doors is accomplished through the twin springs to open and through the hydraulic drive of the hydraulic brake system to close the doors.

Door Opening

The bomb-bay doors can be opened through the stand-by control system only by the navigator whose door control panel is equipped with BH-45 switch 9 for the purpose (Fig. 37).

When the switch is ON, it energizes ЭЛС-1 electric release unit 39 of the stand-by door opening system; the unit

is mounted on the hydraulic drive unit (See Fig. 36) and while operating turns release lever 26 which unlocks piston rod 23 connected to release spring 31. When expanding the spring pulls in piston rod 23 which by lever 20 and rod 16 pushes sleeve 13 away from the piston. So balls 11 can now move inside the piston and unlock it. When the hydraulic drive piston is unlocked, the forward reel, as well as the aft reel actuated by the coupled springs turn and open the bomb-bay doors. When the piston rod pushes out of the cylinder, it forces the hydraulic fluid from one chamber of the cylinder into the other (Fig. 41).

Door Closing

The stand-by system for closing bomb-bay doors is controlled by the BH-45 switch mounted on the pilots' central panel (See Fig. 37).

When the BH-45 switch is pressed voltage is supplied to the ЭМ-12 electromagnet of the stand-by hydraulic valve. The electromagnet actuates the slide valve of the hydraulic valve (See Fig. 42). In this case the hydraulic fluid is delivered into the hydraulic drive from the hydraulic brake system of the aircraft while the main system line is shut off from the supply line of the drive by the shuttle valve of the slide valve distributor.

Operation of the mechanical part of the system when the doors are closed is identical to that of the normal control system.

Simultaneously with the bomb-bay door closing spring 31 of the hydraulic drive release mechanism gets cocked (See Fig. 36).

The cocking is effected by hydraulic piston 33 of reverse loading as the hydraulic fluid flows into the hydraulic drive cylinder when the bomb doors close.

[redacted]

Door Emergency Control

The emergency control of the bomb-bay doors ensures the bomb-bay door opening to release the bombs in emergency. In this case the system is controlled by the emergency release switches, or, with the aircraft mains de-energized, by the emergency release handle (See Fig. 37). When the emergency release switches on the pilot's instrument panel or the navigator's bomb release panel are turned on, power from the aircraft mains is supplied to the ЭЛС-1 electric release unit of the emergency bomb door opening. In case the emergency release handle on the pilot's panel is turned on, power to the electric release unit is supplied from the storage batteries. In both cases the electric release unit operates to open the doors. The doors are opened by the twin springs, similar to the case of stand-by opening system.

A simultaneous cut-in of the emergency bomb release circuits and of the electric release unit circuits of the emergency door opening system considerably reduces the time required to open the bomb-bay doors for dropping the load in emergency.

Operation of ЭЛС-1 Electric Release Unit

The main part of the ЭЛС-1 electric release unit (Fig. 43) is housing 7 which encloses coil 14 having two windings. The coil contains stop 13 and armature 4. The coil is closely pressed against the housing by cover 3 screwed to it from the rear. Secured to the front end of the electromagnet is terminal block 9 with contacts and two pins of the plug connector built in it. Block 9 is protected with cover 10. Armature 4 freely travels within the coil, sliding along two guides of stop 13 and along ring 6.

The ЭЛС-1 electric release unit operates similarly to a pull-in relay. When the electromagnet circuit is closed, armature 4, actuated by electromagnetic force, is pulled into

50X1-HUM

the coil. The electromagnet coil comprises the principal and auxiliary windings.

The principal winding is intended for starting current of a short duration; this current considerably exceeds the current required to hold the armature of the switched-on electromagnet. Consequently, the electric release unit is designed in such a way that the armature at the end of its travel cuts in the auxiliary winding thus opening contacts 11. In this instance an additional resistance is introduced in the electric circuit, the current considerably decreases thereby lowering power consumption for the whole period of the electromagnet operation. The armature remains in this position until the external circuit of the electromagnet is disconnected. As soon as the current in the electromagnet coil circuit is interrupted the armature actuated by the retracting spring returns to its original position. While pulled into the coil armature 4 kinematically connected with release lever 26 (See Fig. 36) releases piston rod 23.

Basic Specifications of ЭЛС-1 Electric Release Unit

Armature travel	8 ± 0.5 mm
Tractive effort, at 24 V	at least 13.5 kg
Spring effort	from 0.5 to 1.0 kg
Power supplied	26.5 V, D.C.
Current, at 26.5 V	
(a) at the moment of cutting in	not over 12 A
(b) during operation	not over 2.2 A

[redacted]

50X1-HUM

Bomb-Bay Door Opening on the Ground (with Aircraft Mains De-Energized)

The aircraft bomb-bay door control system serves to open the bomb-bay doors on the ground with the aircraft electric system de-energized. The bomb-bay door control system is operated by a switch located on the pilot's control panel (Fig. 37).

In this case the bomb doors are opened by the springs after the ЭЛС-1 electric release unit of the stand-by system has operated. After turning on the switch, power for the ЭЛС-1 electric release unit is supplied from the aircraft storage battery system.

Basic Specifications of Bomb-Bay Door Control System

Hydraulic fluid working pressure .... 150 kg/cm^2
Bomb-bay door opening duration:
  for normal control (by the hydraulic drive).not over 2 sec.
  for stand-by control (by the spring) ...... not over 3 sec.
  for emergency control (by the springs) .... not over 3 sec.
Bomb-bay door closing duration:
  for normal control (by the hydraulic drive).not over 3 sec.
  for stand-by control (by the drive from the hydraulic brake system) .... not over 10 sec.

Control System of Doors of Compartment for Communication and Signalling Equipment

The signal flare bomb (ЦОСАБ) compartment door control system incorporates a two-way pneumatic drive, bell crank, rods and a spring.

The door control is effected only by the pneumatic drive from the aircraft pneumatic system with the assistance of the

pneumatic valve located on the navigator's right-hand control panel.

Similar to the bomb-bay doors the signal flare bomb compartment doors are locked in the CLOSED position by a ball lock mounted in the pneumatic drive cylinder.

The doors are opened in the manner given below.

When the pneumatic valve lever is set in the OPEN (ОТКРЫТ) position (Fig. 44) and held so until the indicator light on the ЦОСАБ colour flare bomb panel comes on to indicate that the doors are open, compressed air is supplied to the pneumatic drive cylinder through the pressure delivery connection. Since the pneumatic drive piston is locked by the ball lock (Fig. 45), the compressed air shifts ball lock sleeve 4 thereby compressing spring 3 of the sleeve. As a result, piston 6 under the air pressure starts moving because the piston-locking balls have fallen inside the piston.

Actuated by the piston the piston rod comes out of the cylinder, turning bell crank 2 (Fig. 46); rods 3 attached to bell crank 2 and to the door front edges open the bay doors.

The compartment doors are secured in the OPEN position by the rods which in conjunction with the bell crank make a kinematic lock. After the compartment doors have been opened, the pneumatic valve handle is set to the original (middle) position.

The ЦОСАБ compartment door closing is carried out by setting the pneumatic valve handle in the CLOSED position and holding it so until the indicator light on the ЦОСАБ colour flare bomb panel lights up to show the doors closed position.

In this case the compressed air is delivered into the pneumatic drive through the pressure delivering connection.

At the end of its travel length the pneumatic drive piston gets automatically locked by the ball lock. After the compartment doors have been closed, the pneumatic valve handle is again put to its original position.

Rated working pressure in the aircraft pneumatic system

[redacted]

50X1-HUM

equals 150 kg/cm^2.

The duration of door opening and closing does not exceed 2.5 sec.

Pneumatic Drive of Doors of Compartment for Communication and Signalling Equipment

The pneumatic drive (See Fig. 45) serves to open and close the doors of the compartment for communication and signalling equipment. The pneumatic drive comprises an actuating cylinder, piston 6, piston rod 7, a ball lock and piping to supply compressed air to the cylinder.

Welded on the line-of-closing side is connection 12 through which compressed air is delivered to the cylinder; mounted in the cylinder is bush 9 which serves to guide the piston rod. The bush by its bead bears against the cylinder end and is fixed by special nut 10. Fitted in the groove on the outside surface of the bush is rubber sealing ring 11.

Screwed to the cylinder on the line-of-opening side is a ball lock.

The ball lock consists of housing 2, retracting spring 3 and sleeve 4.

Compressed air is delivered into the chamber of opening through connection 1 threaded into the ball lock housing.

Sleeve 4 travels inside the lock housing. The sleeve tongue holding the balls is bevelled. The other end of the sleeve has a bead by means of which it is held in the circular recess of the housing in the LOCK CLOSED (ЗАМОК ЗАКРЫТ) position.

Piston 6 with piston rod 7 travels inside the cylinder. The piston rod is a tube. Screwed to one of its ends is eye bolt 8 which secures the piston rod to the compartment door control bell crank at frame No. 49. The other end of the piston rod carries piston 6 secured with a nut. The sealing between the piston and the cylinder is effected through rubber sealing ring 5.

To lessen friction and to lubricate the cylinder face, felt gaskets 13 are placed in the ring grooves of the piston. Drilled in the piston are nine equidistant radial holes for the balls of the lock.

Basic Specifications

Full travel of piston	162 ± 0.5 mm
Lock sleeve travel	6 ± 0.2 mm
Sleeve travel when ball lock is released	not over 4^{+1} mm
Piston rod axial clearance with piston LOCKED	not exceeding 0.25 mm
Ball lock release pressure	not over 5 kg/cm^2

The compartment door open and closed position signal circuits are closed by microswitches mounted in the compartment. The microswitches are actuated by the rests screwed into the rocker. The brackets mount four microswitches, type ВК2-142В (See Fig. 46).

Switch 5 is mounted independently and, when pressed, indicates that the compartment doors are closed. The other three switches are installed together on a common base and are intended for the following: switch 8 for blocking the circuit of combat release, switch 7 for blocking the circuit of emergency release, and switch 6 for indicating the door open position.

The switches are adjusted by the rests. The adjustment being completed, the additional travel of every switch button (after its tripping) should be at least 2 mm.

[redacted]

Chapter IV

HOISTING SYSTEM

The hoisting system is intended to load and unload the aircraft with bombs.

The system is designed to hoist bombs from 250-to 3000-kg calibre.

Besides, the hoisting system provides hoisting of the bomb racks during their installation in the aircraft.

Bomb hoisting is performed with the assistance of the БЛ-473М electromechanical hoists in conjunction with special sheave blocks, hoisting slings, beams and other accessories. The electromechanical hoist system is remotely controlled and convenient in operation as it provides, for a quick loading of the aircraft with bombs.

The hoist system incorporates the following parts and assemblies:

Electromechanical hoists БЛ-473М	Req'd 2 sets
Hoisting beams..	4 pcs
Movable blocks	2 pcs
Two-sheave end pulleys	2 pcs
Single-sheave end pulleys	2 pcs
Hoisting frame	1 pc
Twin guy	1 pc
Guides КДЗ-547Н	4 pcs
Hoisting hooks ПКЗ-53	2 pcs
Hoisting slings	3 pcs
Hoisting sling cables	2 pcs
Hoist cable, 50 m. long	2 pcs
Pulleys for hoisting bomb racks	4 pcs
Hoist mounting brackets	4 pcs

БЛ-473М Electromechanical Hoist System

The БЛ-473М electromechanical hoist system with its assemblies and units serves for hoisting and lowering bombs. The system comprises the following units:

Electromechanical hoists БЛ-473М	4
Rotary amplifier (amplidyne), type АМУ-1	4
Hoist system control boxes СУЛ-473Э	2
Control panels ПУЛ-473	2
Instrumentation and local power network flexible cables	2 sets

For convenience of operation the amplidynes, the control box and the instrumentation are mounted on a special hoist control system trolley, type ТСУЛ-473Э, which is a part of the ground equipment.

When the electrical hoists are transported the control panel and the hoists are installed on the trolley; the flexible cables for connecting to the local power network are put into a special bag on the trolley and fixed with belts.

Power is supplied to the system from the aircraft mains via the receptacles placed in the junction boxes of the fuel pumps at frames No. 33 and 49, or from the ground power source.

During the process of hoisting or lowering bombs the bomb hoist control is accomplished by the operator from the ПУЛ-473 control panel connected to the control box through a special flexible cable.

For the occasion of the system being de-energized the hoists are provided with accessories for manual operation.

[redacted]

Basic Specifications

Hoist cable maximum allowable load	500 kg
Power consumed by the system at simultaneous operation of two hoists having a cable load of 500 kg each	no less than 4 kW
Power supply operating voltage	27 ± 2.7 V
Maximum hoisting speed when lifting loads up to 500 kg (electric drive)	no less than 4 m/min.
Minimum hoisting speed when lifting loads up to 500 kg (electric drive)	not exceeding 0.5 m/min.
Reducer-to-drum ratio:	
electrically driven	362
manually driven	14.6
Effort on manual drive crank when hoisting weight of 500 kg	15 kg
Cable travel speed when manually driven at n = 35 r.p.m.	1 m/min.
Length of hoist cables (for bombs hoisted to bomb racks)	20 m.
Cable diameter	5 mm
Weight of the set of hoists and control system ...	not exceeding 185 kg

БЛ-473М Electromechanical Hoist

The БЛ-473М hoist (Fig. 47) is a load-lifting machine operated by electrical and manual drives.

The hoist is designed for a maximum cable load of 500 kg.

In hoisting bombs weighing above 500 kg a pulley block is used.

The hoist mechanism is mounted in a housing and consists of a drive motor installed inside a drum, five pairs of spur gear wheels, one pair of bevel gears and friction clutches.

The friction clutch is mounted on the motor shaft to prevent the hoist cable from damage when the load is jammed. When the cable loading exceeds the allowable value the friction clutch slips. The hoist is equipped with an electromagnetic brake, which serves to hold the weight when the system is de-energized.

The cable is attached to the drum by the cable thimble and can be easily detached. When a bomb is hoisted or lowered, the hoist must be attached to the butt ends of the bomb-bay doors by means of a mounting bracket. The hoist is attached by three pins inserted in the holes of the bracket. One of the pins has a slit nut.

АМУ-1 Rotary Amplifier

The АМУ-1 rotary amplifier (amplidyne) is intended to supply current to the hoist drive motors. It is a unit consisting of a motor and a special generator which are mounted in a single housing and are set on a common shaft. Power to the amplidyne motor is supplied from the 27-V aircraft mains. The amplidyne is mounted on the ТСУЛ-473 trolley.

СУЛ-473 Control Box

The control box is intended for electrical equipment and is installed on the ТСУЛ-473 trolley. The plug connectors on the side walls of the box serve to connect the control box to the control system assemblies. The electrical equipment providing normal operation of the power supply circuit of the system is mounted inside the box.

ПУЛ-473 Control Panel

The control panel provides for remote control of the hoist drive motors. The control panel consists of a magnesium

[redacted]

50X1-HUM

case accommodating potentiometer mechanisms which react to speed changes in the hoist electric motors while hoisting or lowering bombs, and also control the electromagnetic clutches of the hoist brakes.

The top portion of the case mounts two starting buttons and a STOP button. Both hoists can be controlled from the control panel either separately or simultaneously.

For convenience the control panel is attached to a shoulder strap allowing the operator to place the panel on his chest when hoisting bombs.

Instrumentation and Local Power Network Flexible Cables

The instrumentation and the local power network flexible cables serve to exercise control over the current and voltage and also to provide for power supply to the electrical hoists.

The instruments are installed on the ТСУЛ-483 trolley panel; they are two ammeters measuring the current consumed by the hoist drive motors, and a voltmeter indicating the input voltage of the control box.

General Information on System of Electromechanical Hoists.

The system of the БЛ-473М electromechanical hoist (Fig. 48) is a removable type of equipment.

In the process of bomb hoisting the ТСУЛ-473 trolley is driven to the port side of the aircraft. The top cover of the trolley being opened, the nuts are unscrewed and the electric hoists removed.

Then the hoists are installed on the bomb-bay door butt ends, the control panel is removed from the ТСУЛ-473 trolley and the feeder cables are connected to the hoist system units and to the aircraft mains. The hoist cables are laid on the hoisting pulleys in accordance with the load variant scheme adopted, and their ends are connected to the ПКЗ-53 hoisting hooks or to the hoisting sling.

Pressing the START button on the control panel supplies power from the aircraft mains to the amplidyne motor.

Moving the control panel handle from the neutral position will cause either hoisting or lowering bombs. The rate of hoisting or lowering depends on the angle through which the handle is turned. To stop the hoisting or lowering the control panel handle should be returned to the neutral position.

If it is required to control two hoists simultaneously, both handles on the control panel should be smoothly turned in respective directions.

When the system is de-energized the hoisting or lowering may be effected manually.

In the latter case the manual drive crank is attached to the crank adapter of the hoist. The position of the crank with the load hoisted is safety-locked.

Hoisting Beam

To hoist bombs weighing over 500 kg, hoisting beams (Fig. 49) are installed on the top cross bars of two opposite bomb racks. The beams carry the weight and guide the cable during the process of hoisting.

The hoisting beam consists of two channels and two plates riveted together to form a box section. Rigid and elastic guides for the cables are mounted inside the beam. A rigid guide is a U-shaped member secured in the beam.

An elastic guide is a plate spring loosely set on an axle. The spring is supported by a coil spring set on the same axle.

The elastic guide (depending on the calibre of the bomb being hoisted) either fills the gap between the pulley and the rigid guide, or is pressed upward by the frame of the removable block set on the axle under the mark $\frac{500}{3000}$. The beam has two sheave blocks mounted on easy-to-remove bolts.

The middle portion of each beam has four holes to install

[redacted]

50X1-HUM

the sheave blocks in accordance with the scheme of hoisting. Each of the holes is designated with the calibre of the bomb to be handled.

A stamped boss is bolted to one of the beam ends. By an easy-to-remove bolt the boss is connected to the twin guy which is used when a high explosive bomb (ФАБ-3000) is hoisted to the bottom latches of the rack.

Two brackets securing the beam to the bomb rack are bolted to each side of the beam. By special pins the beam is secured to the attachment assemblies of the bomb racks.

Movable Blocks

Movable block 1 (Fig. 50) serves to guide the hoisting sling travel and to form a pulley block. It is used when bombs up to 3000-kg calibre are hoisted.

The most important part of the movable block is the welded frame. Three pulleys, 77, 97 and 126 mm in diameter, are mounted on the axles between the frame cheeks. The frame prevents the hoist cable from slipping off the pulleys during hoisting.

Two-Sheave End Blocks

Two-sheave end block 4 (Fig. 50) serves to guide the cable travel and to form a pulley block. It is used when high explosive bombs from 250- to 3000-kg calibre are hoisted.

Two-sheave end block has a welded frame. One side of the frame has a hole to secure the block to the aircraft structure. Between the frame cheeks two pulleys, 77 and 97 mm in diameter, are set on the axles.

Mounted on the axle of the smaller pulley is a rocker to secure a cylindrical terminal of the cable.

Two-sheave blocks are secured to the aircraft structure on frame No.33 by easy-to-remove bolts.

Single-Sheave End Blocks

Single-sheave end block 6 (Fig. 50) serves to guide the cable travel when bombs of 500-kg calibre are hoisted.

The main part of the end block is the welded frame one side of which has a hole to secure the block to the aircraft structure.

A pulley, 77 mm in diameter, is held by an axle between the frame cheeks. Single-sheave end blocks are secured to the aircraft structure on frame No.49 by easy-to-remove bolts.

Hoisting Frame

Hoisting frame 3 (Fig.50) serves to guide the cable when the high explosive bomb, type ФАБ-3000, is hoisted to the bottom station. The hoisting frame is welded of pipes and shaped members.

Bosses are welded to the ends of the larger pipe. Two pulleys, 86 mm in diameter, are set on the axles between the shaped members. For hoisting bombs the frame is installed on the latches of the КД4-388 bomb rack.

Twin Guy for Hoisting ФАБ-3000 Bombs

Twin guy 5 (Fig. 50) serves to guide the cable when the ФАБ-3000 high explosive bomb is hoisted to the bottom station. The twin guy consists of a frame for pulleys and forks interconnected with cables. Two pulleys, 86 mm in diameter, are set on the axles on one end of the frame cheeks. The other end of the cheeks holds welded bushes securing the cable terminals. The opposite ends of the cables also secured in bushes are threaded to the forks. The forks serve to attach the twin guy to the hoisting beams with easy-to-remove bolts.

Guides for Hoisting ФАБ-250 Bombs

КДЗ-547Н guides 2 (Fig. 50) facilitate bomb hoisting (250-kg calibre) to the bomb rack. Such bombs are hoisted

[redacted]

50X1-HUM

with a single cable. The guides are attached to the bomb rack beams. The guides are removed after the hoisting procedure.

ПКЗ-53 Hoisting Hook

When hoisting bombs up to 500-kg calibre ПКЗ-53 hoisting hook 7 is used (Fig. 50). The hoisting hook has a pawl which is inserted into the shackle neck and two seats for placing the bushes of the hoist cable ends.

Bomb Hoisting Sling

A special sling is used to hoist high explosive bombs, type ФАБ-3000.

On its ends the sling has sockets serving to secure the cylindrical terminals of hoisting cables.

The sling has marks made in red enamel which show a correct position of the sling relative to the suspension bands. The rest plates determine the position of the sling relative to the centre of gravity of the bomb. The front edge of the hoisting sling rest plates must be in the area of the arming retainer.

Hoisting Sling Cables

The hoisting sling cables, 8 mm in diameter, are intended to hoist the bombs, type ФАБ-3000. There are sling cables of two kinds: the first is called a long cable and is 14.8 m. long, and the second is called a short cable which is 13.75 m. long. The short cable is laid on the hoist system pulleys of that side of the aircraft where the bomb is to be hoisted. The long cable is laid on the opposite side.

In order to connect to the hoisting slings the hoisting sling cables have cylindrical terminals, 13 mm in diameter and 34 mm long. The cables are designated in the following

way: the long cable is lettered with Д (long) and the short one is lettered with K (short).

Sheave Blocks to Hoist Bomb Racks

The hoisting sheave blocks guide the cable when the bomb rack is being hoisted. The main part of the block is the frame with a hook welded to it. A sheave, 92 mm in diameter, is placed on an axle between the frame cheeks.

To hoist the bomb rack the hooks of the sheave block are secured to the lugs located on the horizontal beam.

Mounting Bracket for БЛ-473М Hoist

The mounting bracket serves to attach the electromechanical hoist to the butt ends of the bomb-bay doors.

The mounting bracket is welded of steel sheets and consists of the following parts:

(a) pocket for the hoist front boss;

(b) pulley to guide the cable;

(c) rear assembly to secure the hoist;

(d) three pins; two of them are fixed and the third has a slit nut and can move axially;

(e) nuts and washers necessary to secure the rear assembly of the mounting bracket to the electric hoist base.

The mushroom-shaped pin heads are inserted into the slots on the butt ends of the bomb-bay doors, the moving pin being secured with a nut. The mounting brackets are also used to put the hoists in the stowed position.

[redacted]

Chapter V

INSTALLATION OF BOMB RACKS AND BOMB HOISTING

The hoisting of bomb racks (Fig. 51) for their mounting in the aircraft is accomplished by the assistance of the БЛ-473М electromechanical hoists and the system of pulleys.

Every bomb rack is secured to four attachment assemblies of the aircraft. The pins of the top attachment assemblies of the bomb rack are inserted in the holes of the top fuselage boom, while the holes of the conical assemblies are matched with the holes in the beam of the bomb rack to receive easy-to-remove bolts.

The number and location of bomb racks are determined by the bomb suspension variants.

To show how the bomb racks must be arranged in accordance with a given bomb load variant there are patterns and bomb load variant tables on the inner skin of the starboard door of the bomb bay. Made in paint on the beam are assembly numbers and calibres of bombs to be hoisted. The right-hand bomb racks are mounted on the starboard side, while the left-hand racks are mounted on the port side. Alongside with the bomb racks which are installed for carrying bombs the unloaded bomb racks that could be used for other bomb load variants are fixed in the stowed position or removed from the aircraft.

For putting the bomb racks in the stowed position, the beam and the top fuselage boom are fitted with non-load-carrying attachment assemblies at frames Nos 46 and 48. On these additional assemblies bomb racks are mounted as follows: the right-hand bomb rack is fixed on the port side, while the left-hand one is fixed on the starboard side.

The bomb racks mounted, the power supply bunched conductors from the aircraft mains are connected to the bomb rack plug connectors, the plug connector number being matched with the attachment assembly number.

The power supply bunched conductors of the aircraft mains are not connected to the plug connectors of the bomb racks put in the stowed position. They are attached to the sockets of the stowed position in accordance with their numbers.

Installation of Bomb Racks

To install the КД3-488 and КД4-388 bomb racks in the aircraft, the following should be done:

1. Install the БЛ-473М electromechanical hoist on the rear butt end wall of the bomb-bay doors.
2. Direct the cable from the hoist via the end pulley to the hoisting pulley and connect it to the adapter on the rack.
3. Hoist the bomb rack.
4. Bring the top pins of the bomb rack attachment into the holes of the assemblies on the horizontal fuselage boom. Install the bottom attachment assemblies of the bomb rack on those of the beam, align their holes and couple them with easy-to-remove bolts.
5. Connect the bomb rack plug connector to the aircraft mains.

Bomb racks can be hoisted simultaneously to both sides. The dotted line in Fig. 52 shows the hoist cable ready for hoisting bomb racks.

Hoisting Bombs to КД3 Bomb Rack

The ФАБ-250 bombs are hoisted to the КД3-488 bomb rack by one БЛ-473М hoist installed on the mounting bracket on

[redacted]

the forward butt end of the bomb-bay door of the side which is to be loaded (Fig. 53).

To ensure a smooth entering of the bombs the КД3-547Н roller guides are installed on the bomb rack beams. First, loaded are the racks of the first row, then, of the second row, and, finally, of the third row. Mounted in the forward portion of the bomb bay is a two-sheave end block. The hoist cable from the hoist is directed via the two-sheave end block to the bottom and top pulleys of the bomb rack, then brought downwards and connected to the ПК3-53 hoisting hook, which is engaged with the bomb shackle neck.

The shackle is locked on the bomb by pressing the carrying hooks against the bomb lugs. The cable having been laid and connected with the hook, the bomb is hoisted by smoothly turning the handle of the control panel.

The hoisting of the ФАБ-250 bombs can be done by two hoists to both sides simultaneously.

The dotted line in Fig. 53 shows the cable ready position for hoisting the ФАБ-250 bombs.

The hoisting of the ФАБ-500 bombs is performed by two hoists also mounted by means of the mounting brackets on the forward and aft butt ends of the bomb-bay doors of the side that is to be loaded (Fig. 53).

For arranging the hoist cables, a two-sheave pulley (in the fore portion of the bomb-bay) and a single-sheave pulley (in the aft portion of the bomb-bay) are provided.

The way of the cable from the front hoist is identical to that used for hoisting the ФАБ-250 bomb.

From the rear hoist the cable runs via the single-sheave end pulley to the bottom and top pulleys of the bomb rack to come to the pulley of the hoisting beam.

The cable terminal is brought under the bomb body and inserted into the second socket of the ПК3-53 hoisting hook. This done, the bomb is hoisted by a slow turn of the handle of the control panel. The solid lines in Fig. 53 show the cable arranged for hoisting the ФАБ-500 bombs to the КД3-488 bomb rack.

Hoisting Bombs to КД4 Bomb Rack

To the КД4 bomb rack bombs are hoisted by two hoists (Fig. 54).

Loading of the aircraft with bombs in accordance with the accepted bomb load variant is accomplished in two rows, the hoists being mounted on the rear butt ends of the bomb-bay doors to hoist the bombs of the first row and on the forward butt ends to hoist the bombs of the second row of the bomb racks. From the hoists the cables run via the sheaves of the end and movable blocks to make a pulley block with their terminals secured in the sockets of the two-sheave blocks. The hoisting sling cable, which runs along the side of the bomb rack under loading, passes round the larger sheave of the movable block, over the bottom and top pulleys of the bomb rack and runs downwards where its terminals are secured in the sockets of the hoisting sling.

The hoisting sling cable of the opposite side passes round the larger sheave of the movable block and then via the bottom and top sheaves of the bomb rack runs to the pulleys of the hoisting beam.

If it is necessary to change the cable motion, the switching device located on the top cross bar of the bomb rack should be operated.

With the switching device handle in the extreme top position, the cable runs to the hoisting beam pulleys, while in the extreme bottom position of the switching device handle sends the cable down to the hoisting sling.

Then the cable terminals pass round the bomb body to be secured in the hoisting sling sockets. The cables being arranged to form a pulley block, the bomb hoisting is started; for this purpose the handle of the control panel is slowly turned from the neutral position.

[redacted]

50X1-HUM

In loading the aircraft with bombs and in assembling the pulley block the crew must be guided by the load variant pattern riveted to the inner skin of the starboard bomb-bay door and by the set of bomb hoisting diagrams (photos) supplemented to the aircraft Service Log.

Besides, to hoist the bottom ФАБ-3000 bomb use is made of the twin guy and hoisting frame (Fig. 55).

The twin guy is secured to the lugs on the hoisting beam by easy-to-remove bolts, while the hoisting frame is mounted on the latches of the second station of the bomb rack.

In this case, the hoisting sling cable ends from the top pulleys of the bomb rack on the opposite side are brought to the hoisting frame pulleys, then, via the pulleys of the twin guy are put under the bomb body and are fixed in the hoisting sling sockets. This done, the bomb is hoisted by slowly turning the handle on the control panel.

The second shackle of the bomb rack (which is not used) is put in the stowed position on the brackets mounted on the back on the bomb rack.

Equipment Installation and Stowing Ready for Changing the Base

The bombs hoisted, the hoisting system parts and units are put in two bags to place them on a special shelf (Fig. 56) on the starboard side of the compartment for communication and signalling equipment where they are secured by special belts.

The bags are designed to contain the following units: the КД3-547Н guides, two-sheave end block, one-sheave end block, ПК3-53 hoisting hook, pulley to hoist bomb racks, hoisting sling 3000, 8-mm hoisting sling cable, movable block, twin guy, hoist crank, 5-mm hoisting cable, and the block fastening belt.

The face wall of the shelf has a name plate listing the hoist system units to be placed in the bags.

In the stowed position the hoisting beams remain mounted on the attachment assemblies of the bomb racks. Two hoists are put in the stowed position on the platform in the compartment for communication and signalling equipment next to the shelf for the hoist system units. The hoists are secured in the stowed position in the same way as in the working position. Two БЛ-473М hoists of the hoist system set are mounted on the ТСУЛ-473 trolleys.

Installation of КД3 and КД4 Bomb Racks When Changing the Base

When the aircraft changes its base all the bomb racks and the hoist system equipment are to be put in the stowed position (Fig. 57). The bomb racks are put in the stowed position by means of the main and auxiliary attachment assemblies on the beam. First put in three rows are the КД3 bomb racks, followed by the КД4 bomb racks mounted in two rows.

The four hoist beams are installed on the top cross beams of the two opposite КД3 and КД4 bomb racks.

All the parts of the hoist system equipment are put in the two special bags and placed on the shelf in the compartment for communication and signalling equipment.

One set of the УВП fuze arming wire is put in a special case and suspended from the shackles of the КД3 bomb rack (second and third row) on the starboard or port side.

The remaining fuze arming wire comprised in a single set is transported by railway.

Two hoists are installed in the stowed position in the compartment for communication and signalling equipment and the remaining two are mounted in the stowed position brackets in the rear portion of the bomb bay, on both sides.

[redacted]

Ground Set of Bombing Equipment

The ground set of the bombing equipment is intended for use while working in the bomb bay (Fig. 58). The set comprises the catwalk and the service ladder.

The catwalk is a rigid platform the frame of which is made of shaped members located on the sides, riveted together with the assistance of transverse ribs and faced with duralumin sheets. For safety reasons the top surface of the platform has a checkered rubber lining. Riveted to both ends of the catwalk are welded brackets and tubes.

The tube of the welded bracket encloses an axle travelling in the longitudinal direction. Secured to the bottom end of the axle is a handle. To install the catwalk in the bomb bay the handles are depressed, the axle ends are inserted in the gap between the doors and the fuselage edges, and the catwalk is placed on the top bars of the bomb-bay doors.

The service ladder is a truss welded of steel tubes.

Chapter VI

FUZE ARMING SYSTEM

Fuze Arming Wire

УВП fuze arming wire is used in the aircraft to lock and control the fuzes of all the bombs available.

The arming wire provides locking of the following fuzes:

1. Standard vane-type fuzes having no delayed cocking mechanism (МДВ) and also fuzes ВДВ-1, ВДВ-2 and БРВ-1.
2. Vane-type standard and time fuzes (having МДВ delayed cocking mechanisms) such as АПУВ-1 with МДВ-1 mechanism, АМ-4 and АМ-6 with МДВ-2 mechanisms and ТМ-24А and ТМ-24Б with the МДВ-4 mechanisms.

Main Technical Data

Allowable effort on wire snap hook when unlocking the fuze .... up to 35 kg
Wire diameter .... 3 mm
Inside diameter of arming ring of УВП system .... 28 mm

The following types of arming wire are used in the aircraft:

(a) fuze arming wire Nos 1 and 2, double arm, non-folding;
(b) fuze arming wire No. 6, double arm, folding.

[redacted]

50X1-HUM

The fuze arming wire, which locks the fuzes of the bombs of 250- to 3000-kg calibre, is numbered. Fuze numbers for respective bombs are given in Table 5.

Service sets of fuze arming wire used in the aircraft are listed in Table 6.

Double-arm, non-folding fuze arming wire No.1 consists of wire 1 (Fig. 59), 3 mm in diameter, looped at several points. The loops limit the sliding of the S-shaped hook connected to a snap hook.

The arming ring serving to hold the wire in the bomb rack shackle arming retainer is placed in the double loop in the middle of the rod.

Put on the wire ends, between the loops, are S-shaped hooks connected to snap hooks. The snap hooks are provided for holding the arming forks locking the vanes of the fuzes used without the delayed cocking mechanisms МДВ-1, МДВ-2, or МДВ-4.

Each wire has a tag with the wire number stamped on it.

Unlike wire No.1, double-arm folding fuze arming wire No.6 has the forward and aft arms made separately and connected by means of the arming ring which allows them to be folded. The tag with the wire number is fixed to the double loop of the forward arm.

Table 5

Bombs whose Fuzes Can Be Locked with Fuze Arming Wire УВП

Nos	Bomb designation	Fuse designation	Wire to be used, No.
1	2	3	4
1	ЗАБ-100	АПУВ-1, АВ-1Д/У, АВД-М, АПУВ-1 with МДВ-1, ВДВ-1, ВДВ-2	1
2	ФАБ-250 М46, ФАБ-500 М46	АПУВ-1, АВ-1Д/У, АВД-М, АПУВ-1 with МДВ-1, ВДВ-1, ВДВ-2	2
3	САБ-100-90	ТМ-24, ТМ-24 with МДВ-4	1
4	ОФАБ-100-НВ	АПУВ-1, АВ-1Д/У, АВД-М, АПУВ-1 with МДВ-1, ВДВ-1, ВДВ-2, АМ-А, АМ-А with МДВ-2	1
5	ФАБ-3000 М46	АПУВ-1, АВ-1Д/У, АВД-М, АПУВ-1 with МДВ-1, ВДВ-1, ВДВ-2	6

Note: The bombs are equipped with fuzes in accordance with the Manuals and Instructions that exist in the Air Force.

Table 6

Sets of Fuze Arming Wire УВП and Their Application in Aircraft

Nos	Arming wire, No.	Quantity per set	Quantity per aircraft
1	1	24	48
2	2	24	48
3	6	4	4
4	Arming wire for flare bomb (САБ)	24	48
5	Arming fork	-	96

In the process of arming the bombs with fuzes having delayed cocking mechanisms (АПУВ-1 with МДВ-1, АМ-А with МДВ-2, ТМ-24 with МДВ-4, ВДВ-1 and ВДВ-2) the cocking lugs of the delayed cocking mechanisms or fuzes are connected directly to the snap hook of the rod (Fig. 60).

If the bomb has one fuze, only one arm of the УВП wire is used; the other arm remains free.

[redacted]

When the САБ-100-90 bombs are suspended, an additional piece of cable with a fork (Fig. 62) is connected to the snap hook of the tail arm to look the tail fuze vane (Fig. 61).

The additional arming cable for flare bombs (САБ) consists of a double-folded 2-mm steel wire rope. The cable ends are pressed in a steel tube lettered САБ. One of the cabl loops holds the snap hook.

When a bomb is dropped ARMED, the bomb shackle arming retainer holding the arming ring of the УВП wire remains closed. The lug (pin) of the delayed cocking mechanism becomes pulled out by the snap hook, and the bomb drops ARMED.

When a bomb is dropped SAFE, the bomb shackle arming retainer opens to release the arming ring of the УВП wire and the bomb drops together with the arming wire holding the fuzes in the SAFE position.

Chapter VII

BOMBING EQUIPMENT ELECTRICAL CONTROL SYSTEM

The bombing equipment electrical control system incorporates control assemblies, actuating and interlocking mechanisms, as well as communication and signalling facilities listed in Table 7.

Table 7

Bombing Equipment Control System Assemblies and Their Location in Aircraft

Nos	Description	Type or index	Qnty	Location
1	2	3	4	5
1	Bombsight with course stabilizer (set)	ОПБ-11р	1	Frame No.2, along aircraft axis
	Computer	11p-P	1	Frame No.2, port side
	Altitude unit	11p-B	1	Frame No.2, starboard side
	Air speed transmitter	ДС-1200	1	Frame No.12, under central control panel

[redacted]

50X1-HUM

1	2	3	4	5
	Altitude transmitter	ДВ-15	1	At navigator-operator's station
	Control box	11п-У	1	Frame No.5, starboard side
	Dynamotor	Уф-1с	1	Frame No.10, port side, under pilot's floor
	Electronic unit	11п-3	1	Frame No.11, port side, navigator-operator's desk
2	Bomb release panel (See Fig.6), incorporating:		1	Frame No.3, navigator's left-hand control panel
	Station status indicator lights	СЛЦ-51 (red)	7	
	Packet-type switch	П-4	1	
	Station status indicator light check button (with bomb doors closed)	ВК2-140В	1	
	READY TO DROP warning light	СЛЦ-51	1	
	Emergency release switch	В-45	1	
	Emergency ARMED release switch	В-45	1	
	КДЗ rear bomb rack cut-out relay switch	В-45	1	
3	Intervalometer (See Fig.26)	ЗСБР-49А	1	Frame No.3, navigator's left-hand control panel

1	2	3	4	5
4	Bottom bomb release panel (See Fig.7), incorporating:		1	Frames Nos 2 and 3, navigator's left-hand control panel
	Rack selector relay switch	2В-45	2	
	Salvo switch	В-45	1	
5	Bomb release variation box (See Fig. 27)	КВСБ-48	1	Frames Nos 3 and 4, port side
6	Navigator's left-hand circuit breaker (АЗС) panel (See Fig. 8)		1	Frames Nos 4 and 5, navigator's left-hand control panel
7	Bomb-bay door control panel (Fig.9), incorporating:		1	Frame No.3, navigator's right-hand control panel
	Bomb-bay door control switch	ПН-45	1	
	Bomb-bay door open position indicator light	СЛЦ-51 (green)	1	
	Bomb-bay door closed position indicator light	СЛЦ-51 (red)	1	
	Master bombing switch	2В-45	1	
	ARMED indicator light	СЛЦ-51 (red)	1	
	Bomb-bay door stand-by opening switch	ВН-45	1	

[redacted]

50X1-HUM

1	2	3	4	5
8	Bomb release switch (button) (See Fig. 31)	КСБ-49	1	Frame No.2, starboard side
9	Navigator's circuit breaker (АЗС) panel (See Fig.10)		1	Frames Nos 3 and 4, navigator's right-hand control panel
10	Signal flare control panel, incorporating:		1	Frame No.3, navigator's right-hand control panel
	Intervalometer feed and arming interlocking relay	РТ-40	1	
11	ЦОСАБ compartment door control panel		1	Frame No.4, navigator's right-hand control panel
12	ЦОСАБ compartment door operation control valve (Fig.44)		1	Frame No.4, navigator's right-hand control panel
13	Pilot's instrument panel (See Fig.11), incorporating:		1	Frames Nos 5 and 6, port side
	Emergency ARMED release switch	В-45	1	
	ARMED warning light	СЛЦ-51 (red)	1	
	Emergency bomb release switch	В-45	1	
	Navigator's arming circuit interlocking switch	В-45	1	

1	2	3	4	5
14	Pilot's control panel (See Fig.12), incorporating		1	Frame No.8, port side
15	Emergency bomb release control panel with mains de-energized (See Fig.12), which comprises:		1	Frame No.8 pilot's control panel
	Arming switch	В-45	1	
	Emergency bomb-bay door operation switch	КВ6-2А	1	
	Emergency bomb release relay switch	КВ6-2А	1	
16	Switch to open bomb-bay doors on the ground with mains de-energized (See Fig. 12)	ВН-45М	1	Frames Nos 8 and 9, pilot's control panel
17	Pilot's hydraulic control panel (Fig. 37) with bomb door stand-by closing switch	ВН-45	1 1	Frames Nos 6 and 7, along aircraft axis
18	Navigator-operator's instrument panel (Fig. 13), incorporating:		1	Frames Nos 10 and 11, port side
	Bomb release button	КСБ-49	1	
	READY TO DROP warning light	СЛЦ-51 (white)	1	

[redacted]

50X1-HUM

1	2	3	4	5
19	Navigator-operator's electrical panel (See Fig. 14), incorporating:		1	Frame No. 12 navigator-operator's central control panel, along aircraft axis
	Bomb-bay lighting switch	В-45	1	
	Circuit breaker of the bomb-bay reflector dipoles	АЗС-5	2	
	Circuit breaker of the ЦОСАБ compartment reflector dipoles	АЗС-2, left-hand АЗС-15, right-hand	1 1	
20	Fuel pump distribution box with receptacle of БЛ-473М hoist plug connector	ШР48П2НГ9	1 1	Frame No.33, starboard side
21	Hydraulic system assemblies panel (See Fig. 32), which incorporates:		1	Frames Nos 33 and 34, starboard side
	Bomb-bay door operation solenoid (main hydraulic system)	ЭМ-12	1	
	Stand-by system solenoid for bomb-bay door closing (hydraulic brake system)	ЭМ-12	1	

1	2	3	4	5
22	Interlocking system switch box (See Fig.63), which comprises:		1	Frame No.33, along aircraft axis
	Bomb-release circuit interlocking switches (for working in the bomb bay	2В-45	3	
	Warning circuit interlocking switch (for working in the bomb bay)	В-45	1	
23	Bomb release limit switch box, which includes:		1	Frame No.33, along aircraft axis
	Combat bomb release limit switches	ВК2-142В	2	
	Emergency bomb release limit switches	ВК2-142В	2	
	Bomb release interlocking limit switch (with mains de-energized)	ВК2-142В	1	
	Bomb-bay door open position warning limit switch	ВК2-142В	1	
	Bomb-bay door closed position warning limit switch	ВК2-142В	1	
	Emergency ARMED release limit switch	ВК2-142В	1	

[redacted]

50X1-HUM

1	2	3	4	5
24	Dome lamp with red light filter indicating bombing circuits interlocking while working in the bomb bay	КОС-45	1	Frame No.33, bomb-bay top part, along aircraft axis
25	Stand-by system solenoid to open bomb-bay doors (See Fig. 36)	ЭЛС-1	1	Frame No.33, on bomb-bay door hydraulic cylinder
26	Emergency system solenoid to open bomb-bay doors (See Fig. 36)	ЭЛС-1	1	
27	Emergency bomb release distribution box with circuit de-energized (Fig.64), incorporating battery-operated emergency bomb release relay (with mains de-energized)	К-50Д	1 2	Frames Nos 34 and 35 bomb bay on aircraft left-hand side
28	Emergency bomb release distribution box (Fig.65), comprising:		1	Frames Nos 34 and 35, in bomb bay on starboard side
	Emergency bomb release relay	К-50Д	2	
	Relay of emergency bomb release control	РП-2	2	

1	2	3	4	5
	ARMED release warning relay	РП-2	1	
29	Bomb release distribution box (Fig.66), comprising:		1	Frames Nos 36 and 37, bomb-bay top part, along aircraft axis
	Rear row КДЗ bomb rack disengagement relay	РП-3	1	
	Combat bombing relay	РП-6	2	
	МВН-48 arming mechanisms power supply relay	РП-2	1	
30	Fuel pump distribution box with receptacle of БЛ-47ЗМ hoist plug connector on it	ШР48ПК2НГ9	1 1	Bomb-bay frames Nos 48 and 49, starboard side
31	ЦОСАБ compartment door closed position limit switch	ВК2-142В	1	Frame No.49 ЦОСАБ compartment
32	ЦОСАБ compartment door open position limit switch	ВК2-142В	1	Bracket of the door control rod bell crank
33	ЦОСАБ release interlocking limit switch	ВК2-142В	1	Frame No.49; ЦОСАБ compartment
34	ЦОСАБ emergency release interlocking limit switch	ВК2-142В	1	Bracket of door control rod bell crank

[redacted]

50X1-HUM

1	2	3	4	5
35	Red dome lamp interlooking limit switch, with landing gear retracted	ВК-44	1	Frame No.13, nose wheel well
36	Spark extinguisher	ИУ-50	1	Frames Nos 4 and 5, port side
37	Course stabilizer	АП-5-2М	1	Frames Nos 1 and 2, along aircraft axis
38	Bomb rack КД3-488 plug connector:	ШР28П7НШ9		Bomb bay, starboard side
	assemblies $\frac{1-2}{3-4}$		1	Frame No.36
	assemblies 6 - 8		1	Frame No.39
	assemblies 11 - 12		1	Frame No.44
39	Bomb rack КД3-488 plug connector:	ШР28П7НШ9		Bomb bay, port side
	assemblies $\frac{1-2}{3-4}$		1	Frame No.36
	assemblies 6 - 8		1	Frame No.39
	assemblies 11 - 12		1	Frame No.44
40	Bomb rack КД4-388 plug connector:	ШР48П20НШ1		Bomb bay, starboard side
	assemblies $\frac{5-7}{6-9}$		1	Frame No.40
	assemblies 10 - 12		1	Frame No.47
41	Bomb rack КД4-388 plug connector:			Bomb bay, port side
	assemblies $\frac{5-7}{6-9}$	ШР48П20НШ1	1	Frame No.40
	assemblies 10 - 12		1	Frame No.46

Bombing Equipment Electrical Wiring

The control mechanisms and the actuating and interlocking mechanisms are connected by means of common bunched conductors made of wire, type БПВЛ, having red sheath.

Bunched conductors from the front cabin pass through the airtight connectors installed at the bottom of frame No.12 to be connected to the combat and emergency bomb release split junction boxes, as well as to other units of the bombing equipment. The combat and emergency bomb release bunched conductors and their junction boxes are arranged separately. The emergency release system wires provided for the occasion of the mains being de-energized have a separate layout and are laid along the aircraft starboard side; the wires are commutated in the emergency bomb release distribution box (designed for the mains being de-energized) placed on frame No.34, starboard side.

For the circuit breakers and their consumers see Table 8.

Table 8

Circuit Breakers and Their Consumers

Nos	Types of circuit breakers	Feeders	Consumer
1	АЗС-5	УП	Bomb-bay door opening stand-by control
2	АЗС-5	УЛ	Bomb-bay door opening normal control
3	АЗС-2	ВЛ	Combat bombing control
4	АЗС-2	ВМ	Combat bombing control
5	АЗС-5	СВ	Station status indication
6	АЗС-15	ВП	Bombsight and course stabilizer power supply
7	АЗС-15	ВБ	Combat bombing

[redacted]

Nos	Types of circuit breakers	Feeders	Consumer
8	А3С-2	BD	КД3 bomb rack rear row disengagement control
9	А3С-5	BP	Rack selector relay power supply
10	А3С-10	BB1	Combat ARMED release circuit control
11	А3С-10	BB2	Emergency ARMED release circuit control
12	А3С-2	ВД	Emergency bomb release control relay
13	А3С-2	BE	Emergency bomb release control relay
14	А3С-5	BA	Emergency bomb release control

Bombs are suspended from the КД3 and КД4 bomb racks which in accordance with the number of stations, are equipped with the ПБД-48 electrified bomb shackle release units having combat and emergency release windings, the МВН-48 arming mechanisms and the БК-48 interlock switches.

The wiring of all the above mechanisms and interlock switches is arranged on the bomb racks and connected to the aircraft mains through plug connectors.

The circuits of the electrical bomb release equipment receive power from the dual feed buses of the aircraft mains via the circuit breakers of the navigator's station and via the time-lag and glass tube fuses placed in the bomb bay.

The bomb release (both combat and emergency) is interlocked with the bomb-bay door position to avoid a casual bomb release, with the bomb-bay doors closed. The interlocking is accomplished in such a way that power is supplied to the bomb release circuit only when the bomb doors are opened.

Circuitry

All the ТУ-16 aircraft are divided into two groups according to the types of the bomb equipment circuits: aircraft having circuitry arranged as presented in Fig. 67 and in Fig. 68.

The difference between the bomb release control systems is as follows: the aircraft equipped according to Fig. 67 have the modifications listed below:

(a) switch 73, type B-45 (Fig.68), to open the bomb doors with the mains de-energized;

(b) separate ARMED circuits for the combat and emergency systems;

(c) battery-operated bomb release circuit (with the mains de-energized) is equipped with two (instead of one) in-series relays 63 of the emergency bomb release;

(d) relay 8, type rT-40 (to interlock the bomb door closing circuit in the emergency bomb release), is removed (See Fig.67).

The operation of the bomb release control system (Fig.58) is described below.

The electrical bomb release control system provides:

1. Bomb release by the two fully electrified systems (combat and emergency). In addition, it is possible to perform an emergency drop by the system fed from the batteries when the aircraft generators are either cut out or inoperative. The latter system is independent of the combat and emergency drop systems.

2. ARMED release only by the combat system (with the ARMED circuit breaker ON); this is accomplished by an in-train release (by pairs) from the ОПБ-11р bombsight contacts, actuated by the navigator's and navigator-operator's bomb release buttons.

3. Emergency ARMED or SAFE bomb release by throw-over switches at the navigator's and left pilot's stations. Irrespective of the position of the switches at the navigator's

[redacted]

station the pilot may release bombs ARMED or SAFE, if necessary, (the navigator and the navigator-operator can perform combat ARMED drop if at the same time the pilot does not perform an emergency SAFE release).

4. ARMED or SAFE bomb release with the mains de-energized. The navigator can perform an emergency SAFE release with a single movement of his hand. In the same way the pilot performs an emergency or top emergency bomb release. An ARMED release is effected by the same switches with previously turning on the ARMED position of the emergency and the top emergency arming systems (by previously operating the special switch).

The opening of the bomb-bay doors is effected in such a way that they open prior to the bomb release from the stations.

5. Elimination of casual bomb release when the aircraft is parked, during take-off, flight or landing. In the combat bomb release system it is performed by the master bombing switch (intervalometer, ARMED release), the knob of number of bombs per train (when the ЭСБР-49А intervalometer is set to the TRAIN-СЕРИЯ-position), bomb release variation box switches (КВСБ-48) and by the interlock system preventing bomb release with the bomb doors closed or lower stations unreleased. In the emergency and top emergency bomb release systems it is effected by means of interlocking, which prevents bomb release with the bomb doors closed, and also prevents higher-stationed bombs from falling upon the lower-stationed ones.

6. Indication of the bomb door position, station status, power supply of the combat bomb release system (the intervalometer, ARMED system), and indication of the combat release system readiness to drop bombs (READY light). The station status indication system of the bomb racks is electrically independent of the bomb release and bomb-bay door interlock systems.

7. Checking of warning lights operation by means of a packet-type switch.

8. Checking the station status of the bomb racks (with

the bomb-bay doors closed) by pressing the button on the navigator's panel.

9. SAFE drop of a bomb when it casually falls from the shackle.

10. Release of bombs (suspended in two rows) from the bomb racks of the rear row and then of the forward row by operating the КВСБ-48 bomb release variation box.

11. Safety protection for the crew during the work in the bomb bay by using the packet-type switch which cuts out all the circuits controlling bomb release and bomb door operation.

12. Automatic opening of the bomb-bay doors prior to bomb release by the ОПБ-11р bombsight.

13. Battery power supply for opening the bomb-bay doors during the work on the ground.

Bomb-Bay Door Operation Control

The bomb-bay door control is accomplished through the normal, stand-by and emergency systems.

The normal door control system ensures an automatic opening initiated by the ОПБ-11р optical bombsight; it also ensures the door opening and closing effected by means of ПН-45 switch 3 (See Figs 67 and 68) installed on the navigator's right-hand control panel.

The bomb-bay doors are actuated through a hydraulic drive from the aircraft main hydraulic system.

The stand-by control system provides for opening and closing of the bomb-bay doors in case the normal control system is faulty. The doors open when ВН-45 switch 1 on the navigator's right-hand control panel is pushed to ON; the doors closing is performed when ВН-45 switch 2 on the pilots' middle control panel is actuated.

In the stand-by bomb door control system the bomb doors are opened by the twin springs and closed by means of the hydraulic drive of the aircraft hydraulic brake system.

[redacted]

50X1-HUM

The emergency bomb door control system ensures opening of the bomb doors for an emergency bomb release only. The emergency control system is subdivided into the emergency control system fed from the aircraft mains and the emergency control system with the aircraft mains de-energized (top emergency); in the latter case ЭЛС-1 solenoid 61 is fed from the aircraft storage battery. The emergency system fed from the aircraft mains opens the bomb-bay doors when emergency release switch 52 at the pilot's station (Figs 67 and 68) or switch 53 at the navigator's station is turned on; when the mains is de-energized the bomb doors are opened by switching on emergency bomb release control panel 65 and B-45 switch 73 installed at the pilot's station.

When the emergency bomb door control system is employed, the doors are opened by the twin springs.

Normal Control System

1. Automatic bomb door opening by means of the bombsight.

The warning and bomb door opening mechanism (placed in the bombsight) operates after the bombsight has been set into operation and before the sighting angle gets equal to the dropping angle. A current pulse via contact Д of the course stabilizer passes over the УЛ2 conductor to ЭМ-12 bomb doors opening solenoid 6 which switches the main hydraulic system valves over to the bomb door opening.

The time interval between the bomb door opening and the beginning of bomb release by the bombsight may vary (from 3 to 21.5 sec.) and fully depends on the time of the bomb fall.

2. The bomb doors are opened or closed by shifting ПН-45 switch 3 (Figs 67 and 68).

When switch 3 on the navigator's right-hand control panel is set to the OPEN position, power from bus 42 is supplied to ЭМ-12 bomb-bay door opening solenoid 6 via the A3C-5A through the УЛ1 and УЛ2 conductors, switching the main

hydraulic system valves over to the bomb door opening position.

When switch 3 is in the CLOSED position, power from bus 42 via the A3C-5A, the УЛ1, УЛ4 conductors and then via the closed contacts of the door closing circuit interlock switch 7, through the УЛ7 conductor passes to ЭМ-12 bomb-bay door closing solenoid 9. The solenoid switches the main hydraulic system valves over to the bomb door closing position.

Stand-By Control System

The bomb-bay doors are opened by turning on BH-45 switch 1 on the navigator's right-hand panel. When switch 1 is ON, power from bus 41 via the A3C-5A and the УП-1, УП-2 conductors passes to ЭЛС-1 stand-by bomb door opening solenoid 4; the solenoid operates and releases the lock of the hydraulic cylinder to make the springs installed on the aircraft port side open the bomb doors.

The bomb-bay doors are closed when BH-45 switch 2 on the pilot's central control panel is turned on. When switch 2 is ON, power from bus 41 passes to ЭМ-12 solenoid 5 of the stand-by bomb door closing via the A3C-5A circuit breakers and the УП1 and УП4 conductors and then via interlock switch 7 of the bomb doors closing circuit; the solenoid operates and shifts the valves to the position of closing the bomb-bay doors by means of the hydraulic brake system.

Emergency Control System

1. Opening of the bomb doors by emergency drop switches 52 and 53 (Figs 67 and 68).

When navigator's emergency drop switch 53 or pilot's switch 52 are ON, power from bus 47 is supplied to ЭЛС-1 solenoid 61 of the emergency bomb door opening via the A3C-5A circuit breakers, the BA1 and BA2 conductors, the closed contacts of emergency bomb release control relay 59 and the BA5 conductor.

[redacted]

50X1-HUM

The solenoid operates to release the lock of the hydraulic cylinder, and the doors, actuated by the springs, open.

2. Opening of the bomb-bay doors, with the mains de-energized, with the assistance of emergency release control panel 65.

When the handle of control panel 65 is turned, the contacts of the KB6-2A limit switches (in control panel box 65) close and power from the storage battery through the ЭС and ЭС6 conductors passes to ЭЛС-1 solenoid 61 of the emergency bomb door opening. The solenoid operates to release the lock of the hydraulic cylinder, and the bomb-bay doors open actuated by the springs.

3. Opening of the bomb-bay doors, with the circuit de-energized, by B-45 switch 73.

When switch 73 is ON, power from the storage battery through the ЭС and УП2 conductors passes to ЭЛС-1 stand-by bomb door opening solenoid 4. The solenoid operates to release the lock of the hydraulic cylinder, and the bomb doors open actuated by the springs.

4. Emergency opening of the bomb doors both with the mains energized (by actuating switches 52 and 53) and with the mains de-energized (power supply from the battery) by actuating control panel 65 is interconnected with the emergency bomb release. The emergency opening of the bomb doors with network de-energized by B-45 switch 73 is used chiefly during operations on the ground. Switch 73 is installed in the aircraft of later make; the switch ensures opening of the bomb-bay doors during the work on the ground in case the aircraft mains is de-energized or when it is impossible to supply power to the whole aircraft system.

According to the bombing equipment circuit diagram the opening and closing of the bomb doors is coordinated with the operation of the limit switches of the combat and emergency bomb release circuits and the bomb door open and closed position warning circuits. All the limit switches

are mounted in a box and are installed on frame No.33 in the bomb bay along the aircraft axis.

When the bomb-bay doors begin to open limit switch 12 opens, and red light 17 indicating the closed position of the doors goes out. When the bomb-bay doors are fully open ,they close the limit switches of the following circuits:

(a) switches 10 and 11 of the combat bomb release circuit;

(b) switches 54 and 55 of the emergency bomb release circuit;

(c) switch 72 of the emergency ARMED bomb release circuit;

(d) switch 62 of the emergency bomb release with the mains de-energized;

(e) switch 20 of the door open position warning circuit.

In these circumstances signal light 14 (green) comes on supplied from bus 41 through the A3C-5A circuit breaker and the CB-1 conductor.

When the bomb doors begin to close, combat bomb release limit switches 10 and 11, emergency bomb release switches 54 and 55, emergency ARMED bomb release switch 72, emergency bomb release switch 62 (for the mains de-energized), and switch 20 of the bomb-bay door open position warning break the circuits of bomb release and warning, thus preventing the bombs from being released when the bomb doors are partly or fully closed.

When the bomb doors are closed, limit switch 12 closes, and red light 17 indicating the closed position of the bomb-bay doors comes on. Limit switch 72 of the emergency ARMED release circuit is installed in the aircraft because the normal bomb release circuit is separated from the emergency release circuit.

Bomb-Bay Door Position Indication

To ensure safety for the personnel working in the bomb bay when the aircraft is on the ground, interlocking switches are provided on the bottom part of frame No.33; three of them are double switches, type 2B-45 (7), and one is ordinary, type

[redacted]

B-45 (46). The switches are linked with a common bar to provide for simultaneous operation. The switches are connected to the circuits of the windings of the РП-6 bomb release blocking relays and of the solenoid-operated valves for closing the bomb-bay doors. During the work in the bomb bay the switches must be set to OFF.

When the work on the ground is over, it is necessary to turn on the switches, otherwise the bomb-bay doors will not close and the bomb release circuits will be open. The bomb bay is equipped with red dome lamp 56 which indicates that switches 7 and 60 are ON and the bomb release circuits are not cut out. The dome lamp burns while the aircraft is on the ground; the lamp "minus" is connected to the airframe via limit switch 58 connected to the nose landing gear. When the L.G. is retracted, the minus circuit breaks and the dome lamp goes out.

Station Status Indication

The electrical station status indication system affords the possibility to check the presence of bombs irrespective of the bomb release system used and the position of the bomb-bay door interlocking system. The station status indication system of the given bomb racks is of a group type. Lights 19 indicating the station status are installed on the navigator's bomb release panel and are arranged in accordance with the bomb rack location in the bomb bay.

When the bomb-bay doors are open and the bombs are suspended from the bomb racks, power from bus 41 is supplied to indicator light contacts 19 via the A3C-5A circuit breaker, the CB1 and CB4 conductors, through the closed contacts of button 31, conductor CB3, contacts of packet-type switch 16 and conductor CB2. The minus circuits of the lamps are connected to the airframe through the interlock contacts of the bomb racks loaded with bombs. Lights 19 indicating the

presence of bombs on the corresponding bomb racks glow red.

When the bomb-bay doors close, combat bombing relay 13 operates to break power supply to the indicator lights. The lights go out.

When the bomb-bay doors are closed, the electric circuit permits to check the station status when button 31 on the navigator's bomb release panel is pressed.

When button 31 is pressed, power from bus 41 is supplied to indicator lights 19; power is supplied through the A3C-5A circuit breaker, and the CB1, CB3 and CB2 conductors. Consequently, the lights whose minus circuits are connected to the airframe by the interlock contacts of the loaded bomb racks light up to indicate the presence of bombs on the bomb rack.

Packet-type switch 16 is installed on the bomb release panel to check the proper operation of the lights indicating the station status, ARMED release, READY TO DROP position, and the open and closed positions of the bomb-bay doors. When the button of the packet-type switch 16 is pressed, the circuits of indicator lights 19, 17, 18, 15 and 14 will get connected to the airframe (the common minus), and the lights will flash up supplied from bus 41 through the A3C-5A circuit breaker and CB1, CB2, CB22, BB9 and BБ40 conductors. The lights which do not flash when switch 16 is pressed are faulty.

Packet switch 16 is not used to check the indicator lights of the ЭСБР-49А intervalometer, READY TO DROP light 37 on the navigator-operator's instrument panel and ARMED release light 57 on the pilot's instrument panel.

Combat and Emergency Bomb Release

Combat bomb release is carried out by:

1. The navigator, who operates КСБ-49 extension-type bomb release button 34, or the ОПБ-11р bombsight; in the latter case bomb release is effected automatically when the

[redacted]

contacts of the bombsight close at the moment when the sighting and dropping angles get equal.

2. The navigator-operator, who operates КСБ-49 extension-type bomb release button 35, the navigator effecting opening of the bomb-bay doors and providing all bomb release data in this case.

An emergency bomb release can be carried out by the navigator or by the pilot independently, by operating switch 52 on the pilot's instrument panel or switch 53 mounted on the navigator's left-hand control panel. The emergency release, with the mains de-energized, can be effected from control panel 65 mounted on the port side, at the pilot's station.

Bomb Release by Combat System

For dropping bombs by means of the combat system the following is necessary:

- switch ON the ОПБ-11р bombsight;
- switch ON master bombing switch 39 (See Fig.68) on the navigator's right-hand control panel; as a result, power is supplied to the ЭСБР-49А intervalometer and to ARMED release indicator lamps 15 and 57 mounted on the navigator's right-hand control panel and on the pilot's instrument panel. The lamps must light up red.

Prepare the ЭСБР-49А intervalometer for operation by setting the appropriate devices in the SELECTIVE or TRAIN positions, and the КВСБ-48 bomb release variation box by setting the two switches of the rack selector relay and the salvo switch for single bomb or in-pairs salvoes.

Open the bomb-bay doors by pressing switch 3 on the navigator's control panel. When the bombsight is used, the bomb-bay doors get opened automatically.

With bomb-bay doors fully open and the combat bomb release limit switches 10 and 11 closed, the РП-6 relay of the combat bomb release system operates to prepare all the circuits for releasing the bombs; in these circumstances the READY TO DROP indicator light at the navigator's and the navigator-operator's stations will light up.

Press the navigator's bomb release button 34 or the navigator-operator's button 35 to effect the bomb release. If the bombsight is used, the bomb release is effected automatically at the moment when the sighting and the dropping angles get equal.

After master bombing switch 39 is turned ON (on the navigator's right-hand control panel), ARMED release indicator lights 15 on the navigator's right-hand panel and 57 on the pilot's control panel light up being fed from bus 41 through the АЗС-10А circuit breaker, ВВ1 and ВВ3 conductors, closed contacts of the intervalometer and ARMED release power blocking relay 38 (mounted on the signal flare control panel) through the ВВ-40 conductor, normally-closed contacts of relay 70 ARMED release indication circuit (mounted in the emergency bomb release distribution box), and through the ВВ42 conductor. The lights glow red, thereby indicating that the system is prepared for ARMED release.

At the same time through the second pole of the master bombing switch power is supplied to terminal B of the intervalometer from bus 41 through the АЗС-15А circuit breaker, ВБ1, ВБ2 and ВБ3 conductors, closed contacts of the intervalometer and ARMED release power blocking relay 38.

This done, the ЭСБР-49А intervalometer is prepared for selective or train operation. To prepare the intervalometer for selective pulsing it is enough to put the TRAINSEL switch in the SELECTIVE (ОДИНОЧНО) position. The indicator light on the intervalometer lights up to show that the instrument is energized.

When the electric intervalometer is to be prepared for automatic operation (for in-train pulsing) the TRAINSEL switch is put in the TRAIN (СЕРИЯ) position (which will not enliven the intervalometer indicator light). Then the interval control

[redacted]

knob must be operated to set the required interval between the falling bombs while the counter knob must be set to indicate the number of bombs per train. When the number of bombs per train is set, the intervalometer indicator light flashes on showing that the instrument is ready for operation and burns white till the required train of bombs is dropped; then it goes out.

The intervalometer being ready, prepare - the КВСБ-48 bomb release variation box for operation. When the switches of rack selector relay 44 are turned on the bomb release circuits and the circuit of the READY TO DROP indicator light at the navigator's and the navigator-operator's stations get ready for operation. Salvo switch 45 is used to set one-bomb or two-bomb salvoes.

<u>Note</u>: 1. It is imperative to turn on both switches 44 to provide for the required succession of bomb release indicated in the diagram of release (Fig.67).
2. The operation of the КВСБ-48 bomb release variation box is described above.

The intervalometer and the КВСБ-48 bomb release variation box having been prepared, in the process of aiming the warning and bomb-bay door opening indication mechanism of the ОПБ-11р bombsight operates to send a pulse through terminal Д of course stabilizer 33 and the УЛ2 conductor to the winding of bomb-bay door opening solenoid 6. In addition to the automatic bomb-bay door opening initiated by the bombsight, the doors can be opened by turning on switch 3, power being supplied from bus 41 through the АЗС-5А circuit breaker to the winding of bomb-bay door opening solenoid 6. At the beginning of the door opening limit switch 12 of the bomb door closed position indication system breaks the circuit and the indicator light (red) on the navigator's right-hand control panel goes out (it lights up when the circuit breakers are switched on before the flight). With bomb-bay doors fully open, limit switch 20 becomes closed and bomb-bay door opening indication light 14 mounted on the navigator's right-hand panel lights up (green) fed from bus 41 via the АЗС-5А circuit breaker and сВ1 conductor.

At the same time limit switches 10 and 11 of the combat bomb release circuit close.

All the bomb release circuits are connected with the normally-opened contacts of two РП-6 relays 13 which are mounted in the combat bomb release distribution box. The two РП-6 relays ensure a reliable operation of the combat bomb release circuit since, in case one of the relays fails, power to the circuits is supplied via the contacts of the other relay connected in parallel.

As long as the bomb-bay doors are closed, the РП-6 relay windings are de-energized, their paralleled contacts are open and the load drop is impossible because the КВСБ-48 bomb release variation box is de-energized. But as soon as the bomb-bay doors are open, combat bomb release limit switches 10 and 11 mounted in the limit switch box at frame No.33 close to supply power to windings of РП-6 relays 13 from bus 41 through the АЗС-2А circuit breaker, ВМ2, ВЛ2, ВЛ3, ВМ3 conductors and the contacts of interlocking switches 7 which must be on.

РП-6 relays 13 will operate, their contacts will close and the circuits will be ready for bomb release. Power is supplied:

1. From switches 44 of the rack selector relay through the ВБ6 and ВБ9 conductors to the navigator-operator's READY TO DROP indicator light 37 and further through the ВБ9 conductor, packet-type switch contacts 16 and the ВБ40 conductor to the navigator's READY TO DROP indicator light 18. The lights will flash white, thus indicating that the bomb release circuits are ready for operation.

2. From bus 41 through the АЗС-5А circuit breaker, ВР1 and ВР2 conductors, contacts of the rack selector relay switches, ВР6 and ВР7 conductors, В and Б contacts of the КВСБ-48 bomb release variation box to the bomb control selector relays contacted to ground through the ПБД-48 bomb shackle release unit windings preparing the relays for operation,

[redacted]

50X1-HUM

In this case the bomb shackle release units will not operate as the current in their windings is insufficient.

3. From bus 41 through the АЗС-5А circuit breaker, СВ1 and СВ4 conductors, closed contacts of station status indicator check button 32 (with the bomb-bay doors closed), СВ3 conductor, contacts of packet-type switch 16, and the СВ2 conductor to station status indicator lights 19. The lights of the bomb racks carrying even a single bomb will burn red.

In further aiming, at the moment when the sighting and the dropping angles coincide, the bomb release automatic mechanism of the bombsight sends out a current pulse to terminal A of intervalometer 36.

The intervalometer begins to operate sending pulses from terminal Б through the ВБ5 conductor to the selector relays. Depending on the position of salvo switch 45 and on the bomb load variant the selector relays will operate either separately or together sending current pulses through the ВБ7 and ВБ8 conductors, respectively to the windings of the ПБД-48 bomb shackle release units with one or two bombs being dropped per salvo.

The first pulse from the intervalometer sent out to the selector relay after the first bomb has been released simultaneously comes to the electromagnet of the КПУ-2 camera controller, thus actuating the АФА-33М aerial camera and, through the ВБ-5 conductor, terminal K of the course stabilizer to the winding of the ОПБ-11р bombsight relay. The relay operates to release the cocked bomb release button, thereby de-energizing all the elements of the bombsight automatic release.

When bomb release control is effected manually, a short-duration pressing of the navigator's bomb release button 34, installed at frame No.2, starboard, or of bomb release button 35 mounted on the navigator-operator's panel, sends out a current pulse through the ВП3 and ВП6. conductors to terminal A of intervalometer 36. The intervalometer in its turn will send pulses via the selector relays to the ПБД-48 release units through the ВБ5, ВБ7, ВБ8 conductors. This results in releasing the bombs in accordance with the bomb load variant.

Sequence of Bomb Rack Operation

1. With switches 1 and 2 of rack selector relay 44 turned ON, the КД3-488 bomb rack (Figs 67 and 68) mounted in three rows (in train bombing, one bomb per salvo) are unloaded as follows.

The first current pulse from the intervalometer is sent through the ВБ5 conductor to terminal Г of the КВСБ-48 bomb release variation box. Then, from terminal Д of the bomb release variation box through the ВБ7 conductor, terminal 5 of plug connector 26 to the ПБД-48 release unit of the forward right-hand bomb rack; this results in releasing the first bottom bomb.

The second current pulse from the intervalometer comes to terminal Г of the КВСБ-48 bomb release variation box and from terminal В of the КВСБ-48 box through the ВБ8 conductor, via the closed contacts of relay 43, through the ВБ27 conductor, terminal 5 of plug connector 25 is fed to the ПБД-48 bomb shackle release unit of the left-hand rear bomb rack, and the bottom bomb will be released.

The third current pulse, like the first one, via terminal 5 of plug connector 26 gets to the ПБД-48 release unit of the forward right-hand bomb rack. This results in releasing the bomb from the higher station.

The following current pulse, like the second one, through terminal 5 of plug connector 25 is supplied to the ПБД-48 release unit of the rear left-hand bomb rack. This results in releasing the bomb from the higher station.

The subsequent current pulses are supplied to the forward right-hand bomb rack and the rear left-hand bomb rack in turn until they are fully unloaded.

[redacted]

The following current pulse from terminal Д of the КВСБ-48 bomb release variation box through the ВБ7 conductor is sent to terminal 5 of plug connector 26. It passes through the unloaded bomb rack of the starboard side, the ВБ10 conductor, via terminal 5 of plug connector 21 to the ПБД-48 bomb shackle release unit of the forward left-hand bomb rack. This results in releasing the bottom bomb.

The following current pulse from terminal Е of the КВСБ-48 box is supplied through the ВБ8 conductor, via the closed contacts of relay 43 and through the ВБ27 conductor to terminal 5 of plug connector 25. Further, through the unloaded bomb rack of the port side, ВБ18 conductor, and terminal 5 of plug connector 31 it is fed into the ПБД-48 release unit of the right-hand rear bomb rack. This results in releasing the bottom bomb.

The subsequent current pulses are sent to the forward left-hand bomb rack and the rear right-hand bomb rack in turn, until they are fully unloaded.

When the forward left-hand and rear right-hand bomb racks are fully unloaded, the subsequent current pulse from terminal Д of the КВСБ-48 box is supplied to the ПБД-48 release unit of the left-hand middle bomb rack through the ВБ7 conductor, unloaded racks of the forward row, the ВБ14 conductor, closed contacts of relay 43, ВБ24 conductor, terminal 5 of plug connector 23. This results in releasing the bottom bomb.

The following current pulse from terminal Е of the КВСБ-48 bomb release variation box is supplied to the ПБД-48 bomb shackle release unit of the middle right-hand bomb rack through the ВБ8 conductor, closed contacts of relay 43, ВБ27 conductor, unloaded racks of the rear row, ВБ19 conductor, closed contacts of relay 43, ВБ26 conductor, terminal 5 of plug connector 28. As a result, the bottom bomb is released.

The subsequent current pulses are sent to the middle left-hand bomb rack and to the middle right-hand bomb rack in turn, until they are fully unloaded.

2. With switches 1 and 2 of rack selector relay 43 being ON, the unloading of the КДЗ-488 bomb racks mounted in three rows (in train bombing, two bombs per salvo) is as follows.

The first pulse from the intervalometer through the ВБ5 conductor passes to terminal Г of the КВСБ-48 bomb release variation box and from terminal Д through the ВБ7 conductor, terminal 5 of plug connector 26 is fed into the ПБД-48 release unit of the forward right-hand bomb rack.

At the same time a current pulse from terminal Г through terminal И of the КВСБ-48 box, ВБ28 conductor, contacts of switch 45, ВБ4 conductor passes to terminal Ж of the КВСБ-48 bomb release variation box and, further, through terminal Б, ВБ8 conductor, contacts of relay 43, ВБ27 conductor, terminal 5 of plug connector 25 to the ПБД-48 bomb shackle release unit of the rear left-hand bomb rack. Thus, the first current pulse is fed simultaneously into the release units of both the forward right-hand bomb rack and the rear left-hand bomb rack. As a result, the bottom bombs are released, one bomb from each bomb rack.

The subsequent current pulses will go on releasing bombs until both the forward right-hand bomb rack and the rear left-hand bomb rack are fully unloaded, in the manner described above.

The following current pulses are simultaneously supplied from the forward right-hand bomb rack to the forward left-hand one through the ВБ10 conductor, and from the rear left-hand bomb rack to the rear right-hand one through the ВБ18 conductor. This results in a simultaneous release of two bombs, one bomb from each bomb rack, until they are fully unloaded.

Then the middle left-hand and right-hand bomb racks start unloading, current pulses being simultaneously sent from terminals Д and Е of the КВСБ-48 bomb release variation box through the ВБ7 and ВБ8 conductors, and through the unloaded bomb racks of the corresponding group, i.e. the middle left-hand bomb rack will get pulses through the right-hand and left-hand unloaded bomb racks of the forward row, while the middle right-hand bomb rack, through the left-hand and right-hand unloaded bomb racks of the rear row.

3. With switches 1 and 2 of rack selector relay 44 turned ON and the КД3-488 bomb racks installed in two rows (in train bombing, one or two bombs per salvo), the order of unloading and the circuit operation is identical to that of the КД3-488 bomb racks installed in three rows less the unloading of the bomb racks of the middle row.

Thus, the КД3-488 bomb racks installed in two or three rows are divided into two groups according to the operation of the selector relays. When the КД3-488 bomb racks are mounted in three rows, such a group as the forward right-hand and left-hand bomb racks plus the middle left-hand bomb rack receive current pulses from the relay which is connected via switch 1 of rack selector relay 44. The other group, namely, the rear right-hand and left-hand bomb racks plus the middle right-hand bomb rack, receives current pulses from the relay which is connected via switch 2 of rack selector relay 44. When the КД3-488 bomb racks are mounted in two rows the forward right-hand and left-hand bomb racks receive current pulses from the relay which is cut in via switch 1 of rack selector relay 44, while the rear right-hand and left-hand rear bomb racks receive pulses from the relay which is connected via switch 2 of rack selector relay 44.

If one of the bombs fails to drop, the further release of this group of bomb racks stops as the interlock switch of each station excludes the possibility of dropping the upper bomb on the lower one, while the interlock system of the bomb racks excludes the possibility of unloading the subsequent bomb racks. In this case the rest of the bombs can be released only by the emergency release control.

4. With the rear row of КД3-488 bomb racks cut out, the unloading of КД3-488 bomb racks (in train bombing, one bomb per salvo) is performed as follows.

When the rear row of КД3-488 bomb racks is occupied by the КДЛ-88 racks for the reflecting dipoles the rear row of КД3-488 bomb racks is cut out by engaging switch 42 on the navigator's bomb release control panel. Upon turning on switch 42, power from bus 41 is supplied to the winding of relay 43 via the АЗС-2А circuit breaker, and through the BD1 and BD2 conductors. The relay breaks the release circuit of the rear row of the КД3-488 bomb racks.

The first current pulse from the intervalometer is sent to terminal Г of the КВСБ-48 bomb release variation box through the ВБ5 conductor, and then from terminal Д of the КВСБ-48 box through the ВБ7 conductor, and terminal 5 of plug connector 26 to the ПБД-48 bomb shackle release unit of the forward right-hand bomb rack. This results in releasing the bottom bomb.

From terminal Е of the КВСБ-48 bomb release variation box the subsequent current pulse through the ВБ8 conductor, contacts of relay 43, ВБ24 conductor, terminal 5 of plug connector 23 will pass to the ПБД-48 release unit of the rear left-hand bomb rack, thereby releasing the bottom bomb.

The subsequent current pulses are supplied to the forward right-hand and rear left-hand bomb racks in turn until they get fully unloaded. When the forward right-hand and rear left-hand bomb racks are unloaded, the subsequent current pulse from terminal Д of the КВСБ-48 bomb release variation box is supplied to the ПБД-48 bomb shackle release unit of the forward left-hand bomb rack through the ВБ7 conductor, unloaded bomb rack of the starboard side, ВБ10 conductor, and terminal 5 of plug connector 21. As a result, the bottom bomb is released.

The following current pulse from terminal Е of the КВСБ-48 bomb release variation box is fed into the ПБД-48 releaso unit of the rear right-hand bomb rack through the ВБ8 conductor, contacts of relay 43, ВБ24 conductor and the unloaded rear

[redacted]

left-hand bomb rack, ВБ25 conductor, and contacts of relay 43, ВБ26 conductor, terminal 5 of plug connector 28. As a result, the bottom bomb is released.

The subsequent current pulses are supplied to the forward left-hand and rear right-hand bomb racks in turn until they are fully unloaded.

5. With the rear row of the КД3-488 bomb racks cut out, the unloading of the КД3-488 bomb racks (in train bombing, two bombs per salvo) is identical to that of the КД3-488 bomb racks mounted in three rows, i.e. the first current pulse is simultaneously sent out from terminals Д and Е of the КВСБ-48 bomb release variation box to the ПБД-48 release unit of the forward right-hand and rear left-hand bomb racks through the ВБ7 and ВБ8 conductors. The bomb shackle release units begin to operate simultaneously releasing two bombs, one from each bomb rack. The subsequent current pulses will release bombs similarly until the forward right-hand and rear left-hand bomb racks are fully unloaded. Then current pulses are simultaneously sent to the forward left-hand and rear right-hand bomb racks each time passing through the unloaded bomb rack of the respective group.

When unloading the КД3-488 bomb racks mounted in three rows and in case a bomb fails to drop from one of the shackles of the rear (third) row bomb rack, the bomb release circuit will provide unloading of the four remaining bomb racks in the manner absolutely identical to that for the bomb racks mounted in two rows, if switch 42 is turned ON.

6. With switches 1 and 2 of rack selector relay 44 turned ON, the unloading of the КД4-388 bomb racks mounted in two rows (in train bombing, one bomb per salvo) is as follows:

The first current pulse from the intervalometer through the ВБ5 conductor passes to terminal Г of the КВСБ-48 bomb release variation box and further from terminal Д of the КВСБ-48 box through the ВБ7 conductor, terminal 2 of plug connector 27 to the ПБД-48 release unit of the forward right-hand bomb rack. The unit operates to release the bottom bomb. The second current pulse from terminal Е of the КВСБ-48 box will get to the ПБД-48 release unit of the rear left-hand bomb rack through the ВБ8 conductor, terminal 2 of plug connector 24.

As a result, the unit will release the bottom bomb.

The third current pulse from terminal Д of the КВСБ-48 bomb release variation box through the ВБ7 conductor, terminal 2 of plug connector 27, unloaded station of the forward right-hand bomb rack, and from terminal 1 of plug connector 27, through the ВБ11 conductor, terminal 2 of plug connector 22 is fed to the ПБД-48 release unit of the forward left-hand bomb rack, as a result, the unit will release the bottom bomb.

The fourth current pulse from terminal Е of the КВСБ-48 box through the ВБ8 conductor, terminal 2 of plug connector 24, unloaded station of the rear left-hand bomb rack, from terminal 1 of plug connector 24, ВБ17 conductor, terminal 2 of plug connector 29 gets to the release unit of the rear right-hand bomb rack. The unit will operate to release the bottom bomb. The subsequent current pulses pass to the forward right-hand and rear left-hand, forward left-hand and rear right-hand bomb racks in turn until the racks are fully unloaded. Thus, every current pulse coming from the respective selector relay of the КВСБ-48 bomb release variation box follows the path of the previous pulse of a given group of bomb racks plus the path to the ПБД-48 release unit of the shackle whose bomb is going to be released.

7. With switches 1 and 2 of rack selector relay 44 turned ON, the unloading of the КД4-388 mounted in two rows (emergency bomb release, two bombs per salvo) is as follows.

The first current pulse from the intervalometer is supplied through the ВБ5 conductor to terminal Г of the КВСБ-48 bomb release variation box and from terminal Д through the ВБ7 conductor, terminal 2 of plug connector 27 to the ПБД-48 release unit of the forward right-hand bomb

[redacted]

rack. At the same time a current pulse from terminal Г through terminal И of the КВСБ-48 box, ВБ28 conductor, contacts of switch 45, and the ВБ4 conductor is sent to terminal Ж of the КВСБ-48 box and, further, through terminal Е, ВБ8 conductor, terminal 2 of plug connector 24, to the ПБД-48 release unit of the rear left-hand bomb rack. Thus, the first current pulse gets simultaneously to the ПБД-48 release units of the forward right-hand and rear left-hand bomb racks. The units operate to simultaneously release two bombs, one from each bomb rack. The second pulse also from terminals Д and Е of the КВСБ-48 box through the ВБ7 and ВБ8 conductors, unloaded stations of the forward right-hand and rear left-hand bomb racks, ВБ11 and ВБ17 conductors, terminals 2 of plug connectors 22 and 29 are sent to the electromechanical drives of the forward left-hand and rear right-hand bomb racks. The units simultaneously release two bombs, one from each bomb rack. The subsequent current pulse will again be sent to the ПБД-48 release units of the forward right-hand and rear left-hand bomb racks following the whole path of the first and second current pulses, i.e. from terminal Д of the КВСБ-48 bomb release variation box through the ВБ7 conductor to terminal 2 of plug connector 27, first station of the forward right-hand bomb rack to terminal 1 of plug connector 27 through the ВБ11 conductor to terminal 2 of plug connector 22, first station of the forward left-hand bomb rack to terminal 1 of plug connector 22 through the ВБ12 conductor to terminal 19 of plug connector 27 and, further, to the ПБД-48 bomb shackle release unit of the forward right-hand bomb rack of the second station.

If there is no bomb on the second station and there is a bomb suspended from the third one, the current pulse will pass via the second station of the forward right-hand bomb rack, then via the second station of the forward left-hand bomb rack, through the ВБ20 conductor, terminal 8 of plug connector 27 to the release unit of the front right-hand bomb rack of the third station. The current pulse simultaneously supplied from terminal Е of the КВСБ-48 box will follow a similar path through the rear row of bomb racks.

The subsequent current pulses follow the paths of the previous current pulses releasing bombs in the following order: the forward right-hand bomb rack, rear left-hand rack and then forward left-hand bomb rack, rear right-hand rack, etc.

Thus, the КД4-388 bomb racks mounted in two rows are divided similarly to the КД3-488 bomb racks into two groups depending on the selector relay operation. If one of the bombs fails to drop, the further unloading of this group of bomb racks (from both the combat and emergency circuits) stops as a result of the operation of the interlock switches of the bomb racks.

The unloading of the КД4-388 bomb racks mounted in one row (when bombing in train) can be effected only in a one-bomb salvo which corresponds to the release system circuit. When the КД4-388 bomb racks are installed in one row, current pulses are supplied through one circuit from the relay which is cut in by switch 1 of rack selector relay 44.

The electric circuit provides for the following order of unloading.

The first current pulse from terminal Д of the КВСБ-48 bomb release variation box through the ВБ7 conductor, terminal 2 of plug connector 27 is sent to the ПБД-48 shackle release unit of the right-hand rack.

The following current pulse also from terminal Д of the КВСБ-48 box reaches the circuit of the first pulse and from terminal 1 of plug connector 27 is fed into the ПБД-48 release unit of the left-hand rack through the ВБ11 conductor, terminal 2 of plug connector 22.

The subsequent current pulse is sent to the shackle release unit of the right-hand bomb rack, then to that of the left-hand rack, etc., until they are fully unloaded.

The circuit of the bombing equipment provides also means

[redacted]

for unloading the КД3-488 bomb racks mounted in two and three rows, as well as the КД4-388 racks mounted in two rows (first unloaded are the rear racks and then the front ones, and vice versa, depending on the way switches 1 and 2 of rack selector relay 44 are engaged). This kind of unloading is not recommended for the Ty-16 aircraft as it may involve a serious loss of longitudinal and lateral stability, causing considerable loads on the aircraft controls.

When bombs are released in a one-bomb salvo (both in selective and in in-train bombing) from the КД3 and КД4 bomb racks mounted in two rows and from the КД3 racks mounted in three rows, the bombing equipment circuit does not preserve the succession of unloading indicated in the diagrams (See Fig.4), in case the bomb doors are closed and opened in the intervals between the successive bomb releases.

The succession of unloading is broken if unloading is interrupted after a current pulse has been sent out from the selector relay which receives power through switch 1 of rack selector relay 44. When the bomb-bay doors are subsequently opened, the next current pulse is supplied to the bomb racks not from the relay receiving power through switch 2 of rack selector relay 44 (this could provide operation in accordance with the circuit diagram, see Fig. 4), but from the relay which receives power through switch 1 of rack selector relay 44. Thus, next racks to be unloaded are the same bomb racks which have already been unloaded. In this way, the sequence of unloading is violated.

Emergency Bomb Release

The bombing equipment circuit is intended for effecting an emergency bomb release either from the aircraft mains or from the aircraft storage battery system when the aircraft mains is de-energized.

For the emergency bomb release from the aircraft mains

the aircraft has emergency bomb release switches 53 on the navigator's bomb release control panel and switch 52 on the pilot's instrument panel. Both switches are under red protecting caps locked with a flaxen thread and a seal.

Emergency Bomb Release from Aircraft Mains

SAFE release. For emergency SAFE release it is necessary to turn on switch 52 at the pilot's station or switch 53 at the navigator's station. In this case power from bus 47 is supplied through the A3C-5A circuit breaker, BA1 and BA2 conductors to combat bomb release circuit interlock relay 38 which breaks the intervalometer and ARMED release circuits.

Simultaneously power from bus 47 is supplied through the A3C-5A circuit breaker, BA1, BA2 and BA5 conductors, normally-closed contacts of emergency bomb release control relays 59 to ЭЛС-1 emergency bomb door opening solenoid 61. The solenoid will unlock the hydraulic cylinder ball lock, and the bomb-bay doors will open. When the bomb-bay doors are open, limit switches 54 and 55 mounted in the limit switch box at frame No.33 close, power from bus 47 is supplied to the windings of emergency bomb release control relays 59 through the A3C-2A circuit breaker and ВД1, ВЖ1, ВД2 and ВЖ2 conductors.

Both relays will simultaneously open the feed circuit of ЭЛС-1 emergency bomb door opening solenoid 61 and will close the feed circuit of emergency bomb release relays 64.

Power from bus 47 through the A3C-5A circuit breaker, BA1 conductor, closed contacts of switches 52 and 53, BA2 conductor, closed contacts of relays 59, BA8 and BA9 conductors, closed contacts 7 of the emergency bomb release interlock switch is supplied to the windings of emergency bomb release relays 64.

Relays 64 operate, their contacts close to provide power supply from bus 48 through the 50A time-lag fuse, BH1 and BH2

[redacted]

conductors to the ПБД-48 release units of the bomb racks, to the emergency bomb release windings. This will result in an emergency SAFE bomb release.

To make the circuit operate reliably two relays 59 are connected in parallel in the emergency bomb release control circuit. If one of the relays is inoperative, power supply for an emergency bomb release is ensured by the other relay.

To avert a spontaneous emergency bomb release due to a displacement of the relay contacts resulting from the aircraft shock against the ground during the take-off or rough landing with bombs loaded, the emergency bomb release power supply circuit has two emergency release relays 64 connected in-series. For this purpose the contacts of one relay are arranged nosewise, while those of the other are set tailwise.

Simultaneously with solenoid 61 intervalometer and ARMED release power supply interlock relay 38 breaks the intervalometer and ARMED release circuits. As a result, the bombs will be released SAFE by the emergency system and the combat bomb release system will be disconnected from the emergency one.

When the navigator prepares the emergency ARMED bomb release circuit, the pilot, if necessary, can perform an emergency SAFE release by turning on gang switches 51 and 52 (switch 51 breaking the ARMED release circuit at the navigator's station, and switch 52 ensuring the emergency SAFE bomb release).

ARMED release. The pilot and the navigator can effect an emergency ARMED bomb release by setting switch 50 on the pilot's instrument panel to the ARMED position (emergency bomb release) or switch 49 with the inscription TURN ON FOR EMERGENCY ARMED RELEASE (ВКЛЮЧИ ПРИ АВАРИЙНОМ СБРАСЫВАНИИ НА ВЗРЫВ) on the navigator's bomb release panel to the top position for ARMED drop. Switches 49 and 50 are under red protective caps and are provided with seals on a flaxen thread. When switches 49 and 50 are turned ON power from bus 47 through the АЗС-10А circuit breaker, BB2 and BB4 conductors, closed contacts of indication system interlock switch 60, BB8 conductor is

supplied to РП-2 relay 70 mounted in the emergency bomb release junction box; the relay will close the power supply circuit of ARMED release indicator lights 15 and 57 at the navigator's and the pilot's stations.

The lights will flash up red to indicate that the system is prepared for an ARMED release. When one of the emergency bomb release switches (53 at the navigator's station or 52 at the pilot's station) is turned on, power from bus 47 through the АЗС-5А circuit breaker, BA1, BA2 and BA5 conductors is supplied to emergency bomb door opening solenoid 61 to open the bomb doors.

As soon as the bomb doors are open limit switch 72 installed in the limit switch box at frame No.33 through the BB43 conductor closes the feed circuit of the winding of РП-2 relay 71 mounted in the bomb release junction box. The relay closes the МВН-48 arming mechanism feed circuit and simultaneously opens the combat ARMED release circuit. This will result in an emergency ARMED bomb release.

On the aircraft of earlier make power to the arming mechanisms (for combat and emergency bomb release) was supplied only through the ARMED release circuit. For a more reliable operation of the ARMED release circuit the combat and emergency systems of the aircraft of later make have independent ARMED release circuits. If the ARMED release circuit of the combat release system fails, the ARMED release is effected through the emergency system.

Battery-Operated Emergency Bomb Release System

In addition to the combat and emergency bomb release systems provision is made in the aircraft for an emergency bomb release by means of the system fed from the storage battery (if the aircraft mains is de-energized).

SAFE release. The aircraft mains being de-energized, the bomb release is accomplished by turning the handle of bomb

[redacted]

release device 65 mounted on the pilot's control panel. The contacts kinematically connected with the handle close the circuit supplying power from the storage battery through the ЭС6 conductor to solenoid 61 of emergency bomb-bay door opening lock and through the ЭС8 conductor. The bomb release interlock circuit limit switch closes the circuit of emergency bomb release relay 63, with circuit 62 de-energized. When the bomb-bay doors are opened by the system powered from the storage battery, power through the ЭС conductor, closed contacts of relay 63, ЭС2 and ВН2 conductors is supplied to the ПБД-48 release units. The units will release bombs set to SAFE.

As was the case in the emergency bomb release, the bomb release circuit, with the aircraft mains de-energized (power supplied from the battery), has two in-series relays 63 to avert the possibility of a spontaneous bomb release during the take-off or a rough landing, with the bombs loaded (a spontaneous release may occur due to the closing of the relay contacts as a result of bumps against the ground). For this purpose the contacts of one relay are set nosewise, while those of the other relay are set tailwise.

ARMED release. To release the bombs ARMED with the mains de-energized, the switch of device 65 designated ARMED (ВЗРЫВ) should be turned on. In this case, power is supplied from the storage battery through the ЭС5 conductor to the МВН-48 arming mechanisms; then by turning the handle of the device the bombs are released ARMED.

Power Supply to Hoist System Units

When bombs are hoisted by the БЛ-473М electromechanical hoists, the hoists and control units are connected to a power source through receptacles 68 and 69 provided in the bomb bay on the fuel pump distribution boxes at frames Nos 33 and 49. When the hoists are attached to the bomb-bay door forward attachment units, they are connected to receptacle 68, when attached to the door aft attachment units, they are connected through receptacle 69. Power to receptacles 68 and 69 is supplied from buses 66 and 67 of the fuel pump distribution box via 100A time-lag fuses.

[redacted]

Chapter VIII

BONDING OF BOMB EQUIPMENT UNITS

All the bomb equipment units are bonded, as the aircraft has a single-wire electric system (i.e. the airframe is used as a conductor of the system).

Bonding implies electrical connection of two or more metal parts either having casual electrical connection or insulated from one another; bonding is accomplished by means of low-resistance bonding strips and bolted or riveted joints.

A thoroughly made bonding not only provides for using the airframe as a return conductor of the electric system but also serves for the following purposes:

(a) elimination of sparking (at the points of alternating electrical contacts) creating radio noise or even a source of fire (in the compartments containing fuel vapours);

(b) elimination of localized heating and electro-chemical corrosion at the points of attachment since any local resistance to the passing electric current causes localized heating and electro-chemical corrosion affecting the mechanical properties of the aircraft assemblies and aircraft equipment;

(c) provision of normal and steady operation of radio facilities in spite of considerable radio noise caused by the equipment (dynamotors, relays, electric motors and various electric automatic machines) due to effective screening, since the decreased ohmic resistance of the screen lowers the noise voltages generated in a given section. Housings and casings of the equipment, boxes with covers, braiding of wires and bunched conductor sheathings serve as screens.

<u>Note</u>: Screening implies enclosing the current-carrying wires into screens made of electric conductive low-resistance materials to localize the electric noises generated by the wires or to protect the wires from the noise generated by other sources.

The riveted joints used in the aircraft ensure a sufficiently reliable electric contact between the connected parts due to the fact that the anodized coating of the rivet and the hole walls becomes broken in riveting. Bonding by riveting is used in the joints of the junction box attachment brackets, panels, КОС-45 dome lamp, ИУ-50 spark extinguisher, bomb rack attachment assemblies, etc., with the aircraft frame details.

Bolted joints are used for bonding the УФ-1с converter, bottom bomb release control panel, bomb-bay doors, signal flare control panel, limit switch boxes,

hydraulic system panels, emergency bomb release control panel (for the mains de-energized), ЭЛС-1 solenoids, КОС-45 dome lamp, КВСБ-48А bomb release variation box, ИУ-50 spark extinguisher, ОПБ-11р bombsight, ЭСБР-49А intervalometer, КДЗ-488 and КД4-388 bomb racks.

The contacting surfaces of the bonded units at the points of attachment and the surfaces to support bolt heads or nuts should be thoroughly filed, i.e. their protective coating (anodized, varnished or painted surfaces) must be removed to provide a reliable electric contact between the bonded parts. Upon fixing the bolts the places which have been filed off must be recoated with clear varnish.

The computer, altitude-data unit, control box and the electronic relay unit are connected by bonding strips. The bonding strip terminals contacting the filled-off metallic surfaces are secured by screws and coated with red enamel. To bond the electronic relay unit use is made of a bonding jumper of copper wire strip, П10х16. Bonding wire strip, П3х6, is used to bond the computer, altitude-data unit and the control box.

Screening bunched conductor braids are connected to the airframe by means of 548hc clamps (provided with metal padding) secured to aircraft structure parts (filed in these places for the purpose).

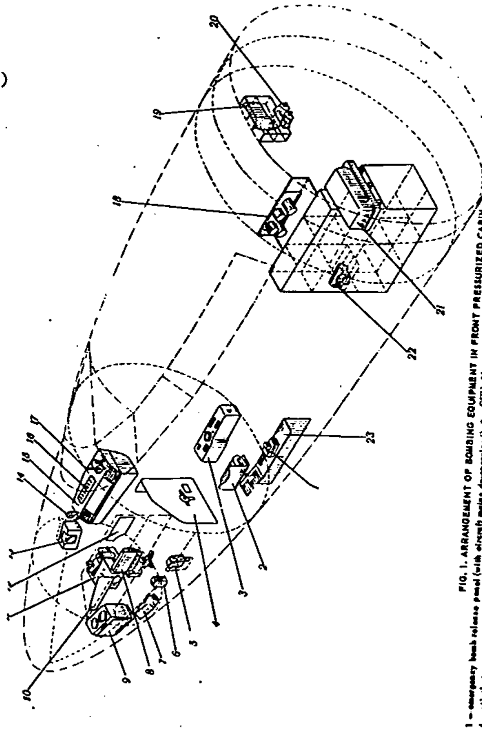

FIG. 1. ARRANGEMENT OF BOMBING EQUIPMENT IN FRONT PRESSURIZED CABIN

1 – emergency bomb release panel (with aircraft mains de-energized); 2 – ОПБ-11р bombsight control box; 3 – pilots' middle control panel; 4 – pilot's instrument panel; 5 – КВСБ-48А bomb release variation box; 6 – bottom panel and ЭСБР-48А intervalometer; 7 – ОПБ-11р bombsight computer; 8 – bomb release control panel; 9 – ОПБ-11р bombsight; 10 – navigator's left-hand circuit breaker panel; 11 – altitude data unit of ОПБ-11р bombsight; 12 – КСБ-49 bomb release button; 13 – navigator's right-hand control panel 14 – navigator's right-hand circuit breaker panel; 15 – navigator-operator's instrument panel; 16 – navigator-operator's electric panel; 17 – ОПБ-11р bombsight altitude and airspeed transmitters; 18 – electronic relay unit; 19 – ОПБ-11р bombsight inverter; 20 – pilot's control panel.

[redacted]

50X1-HUM

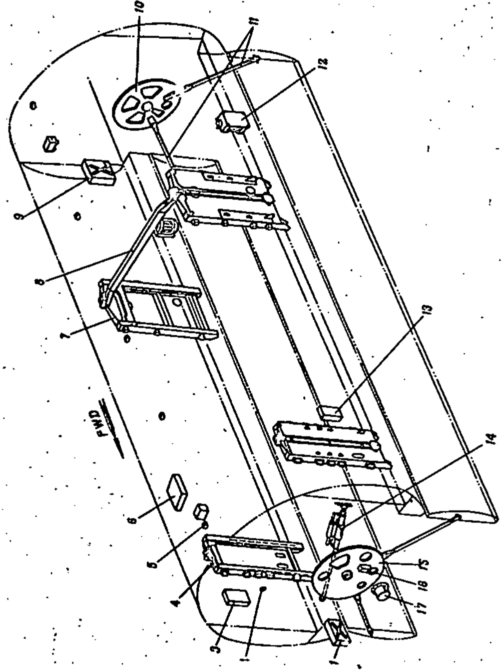

FIG. 2. ARRANGEMENT OF BOMBING EQUIPMENT IN BOMB BAY

1 – junction box (forward) of fuel pumps; 2 – red colour dome lamp; 3 – emergency bomb release system junction box; 4 – КДЗ-488 fuselage bomb rack; 5 – bomb-bay dome light; 6 – bomb release junction box; 7 – КД4-388 rack; 8 – hoisting beam; 9 – junction box (rear) of fuel pumps; 10 – reel; 11 – bomb-bay door control rods; 12 – ОЛ-473М electromechanical hoist; 13 – emergency bomb release system (with aircraft mains de-energized) junction box; 14 – bomb-bay door control mechanism; [illegible]

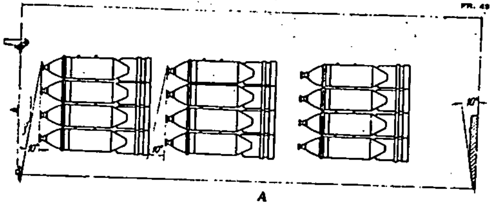

FIG. 3. DIAGRAM OF SAFETY ANGLES FOR ФАБ-250М46 BOMB (IN EXIT FROM BOMB BAY)

[redacted]

50X1-HUM

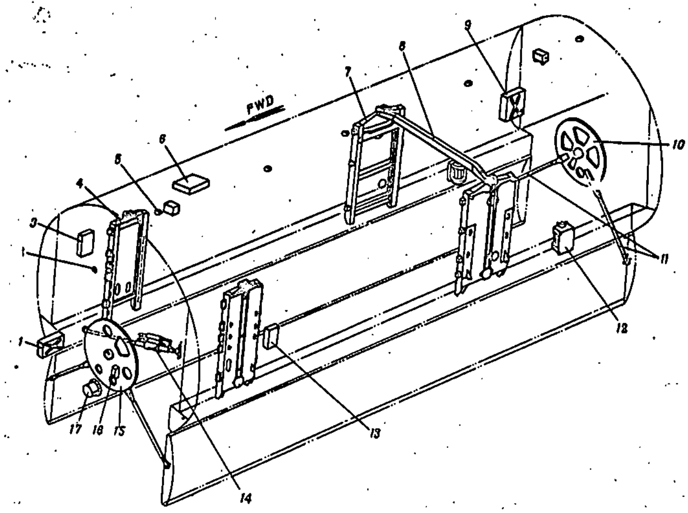

FIG. 2. ARRANGEMENT OF BOMBING EQUIPMENT IN BOMB BAY

1 – junction box (forward) of fuel pumps; 2 – red colour dome lamp; 3 – emergency bomb release system junction box; 4 – КДЗ-488 fuselage bomb rack; 5 – bomb-bay dome light; 6 – bomb release junction box; 7 – КД4-388 rack; 8 – hoisting beam; 9 – junction box (rear) of fuel pumps; 10 – reel; 11 – bomb-bay door control rods; 12 – СЛ-473М electromechanical hoist; 13 – emergency bomb release system (with aircraft mains de-energised) junction box; 14 – bomb-bay door control mechanism; 15 – reel; 16 – limit switch box; 17 – interlock switch box.

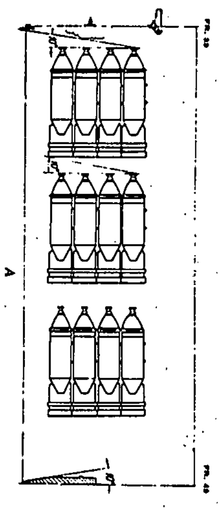

FIG. 3. DIAGRAM OF SAFETY ANGLES FOR ФАБ-250М46 BOMB (IN EXIT FROM BOMB BAY)

[redacted]

50X1-HUM

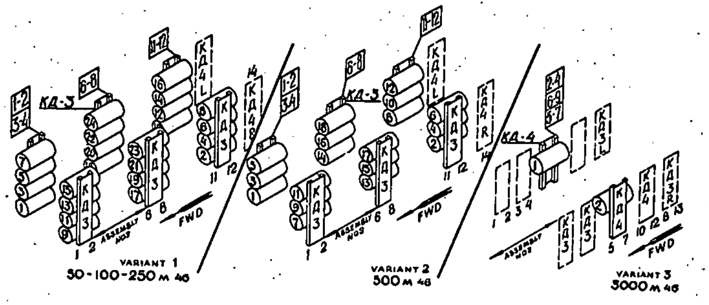

FIG. 4. DIAGRAM SHOWING BOMB RELEASE SUCCESSION, BOMB ARRANGEMENT ON BOMB RACKS AND PLUG CONNECTOR NUMBERS

Figures in diamonds indicate plug connector number to connect to the bomb rack. Figures put on the loads indicate the succession of release. Dotted are the bomb racks in the stowed position.

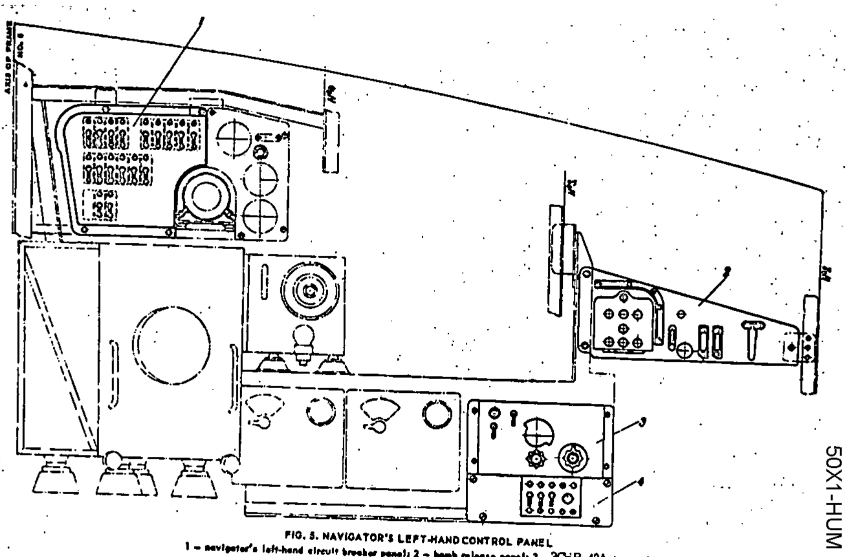

FIG. 5. NAVIGATOR'S LEFT-HAND CONTROL PANEL

1 – navigator's left-hand circuit breaker panel; 2 – bomb release panel; 3 – 3CбP-49A intervalometer; 4 – bottom bomb release panel.

[redacted]

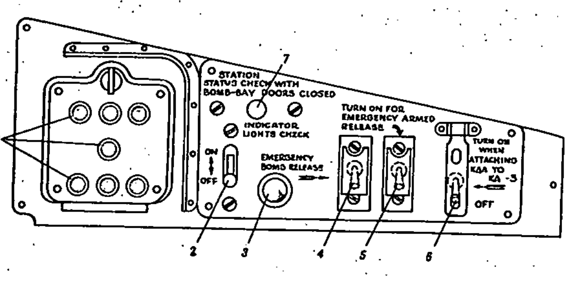

FIG. 6. BOMB RELEASE CONTROL PANEL

1 – station status indicator lights; 2 – switch to check operation of lights; 3 – READY TO DROP indicator light; 4 – emergency bomb release switch; 5 – emergency ARMED release switch; 6 – switch of КДЗ-488 rear bomb racks cut-out relay; 7 – station status indicator check button for checking up with bomb-bay doors closed.

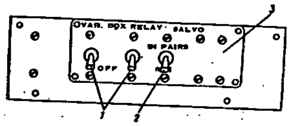

FIG. 7. BOTTOM BOMB RELEASE CONTROL PANEL

1 – variation box relay switches; 2 – salvo switch.

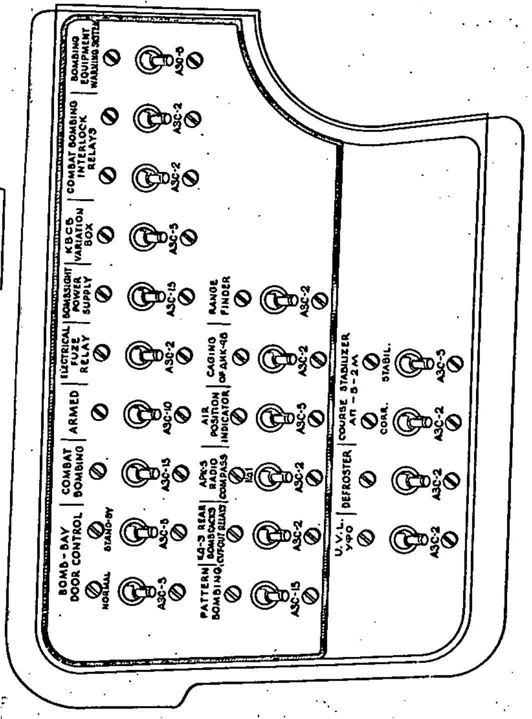

FIG. 8. NAVIGATOR'S LEFT-HAND CIRCUIT BREAKER PANEL

[redacted]

50X1-HUM

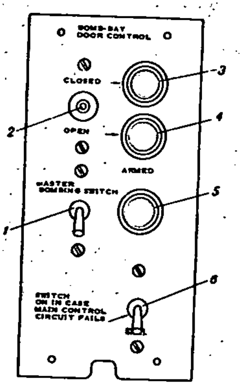

FIG. 9. BOMB-BAY DOOR CONTROL PANEL
1 – master bombing switch; 2 – door control switch; 3 – door open position indicator light; 4 – door closed position indicator light; 5 – ARMED warning light; 6 – switch of door stand-by opening circuit.

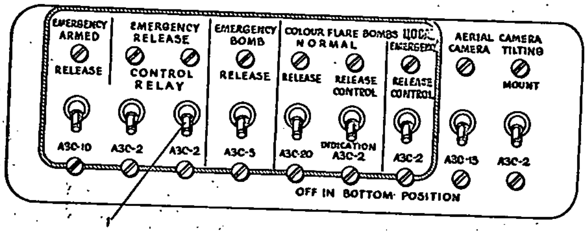

FIG. 10. NAVIGATOR'S RIGHT-HAND CIRCUIT BREAKER PANEL
1 – circuit breakers (A3C).

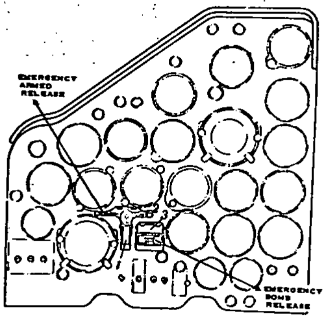

FIG. 11. PILOT'S INSTRUMENT PANEL
1 – emergency ARMED release switch protector; 2 – emergency ARMED release indicator light; 3 – protector of emergency release switch and navigator's ARMED release circuit interlock switch.

[redacted]

50X1-HUM

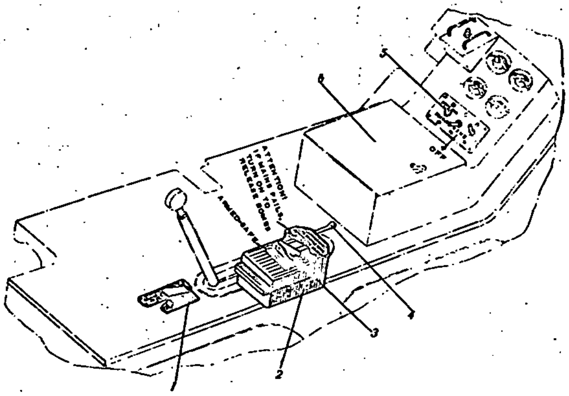

FIG. 12. PILOT'S CONTROL PANEL

1 – bomb door opening switch (with aircraft mains de-energized); 2 – emergency bomb release control panel (with aircraft mains de-energized); 3 – arming switch; 4 – emergency bomb release and door opening handle; 5 – engine starting box.

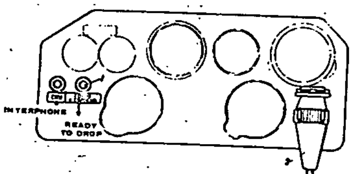

FIG. 13. NAVIGATOR-OPERATOR'S INSTRUMENT PANEL

1 – READY TO DROP indicator light; 2 – bomb release but-

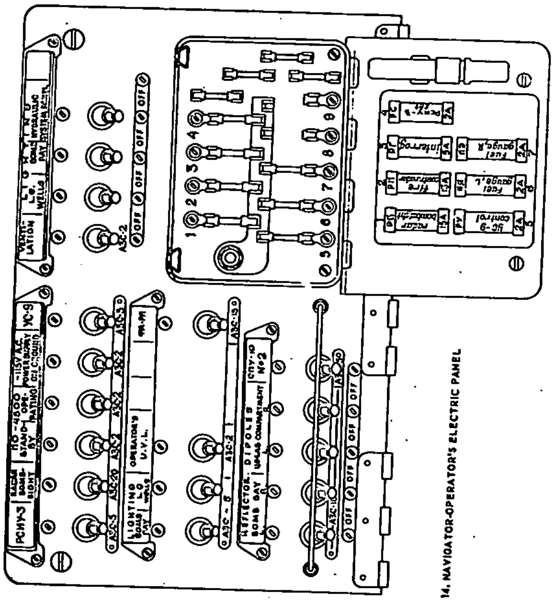

FIG. 14. NAVIGATOR-OPERATOR'S ELECTRIC PANEL

[redacted]

50X1-HUM

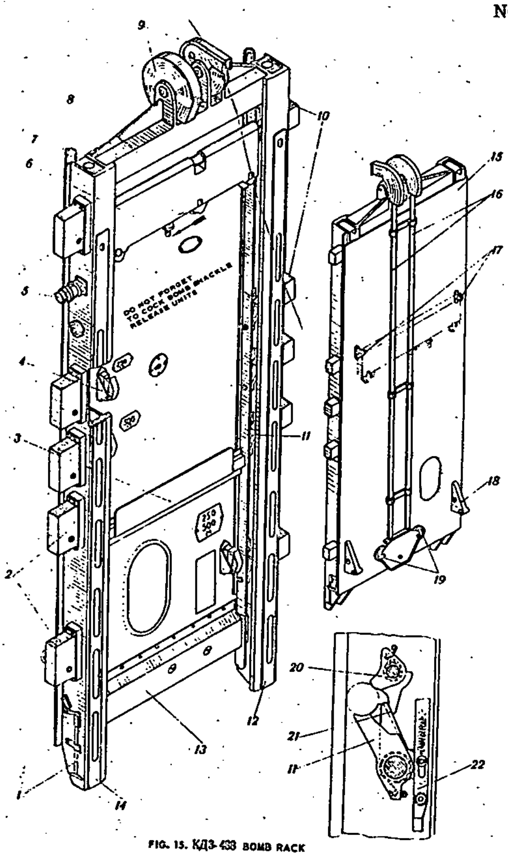

FIG. 15. КДЗ-433 BOMB RACK

1 – unloading handle; 2 – ПВД-43 bomb shackle release units; 3 – steel plate; 4 – БК-43М interlock switch box; 5 – bomb rack plug connector; 6 – Дер 3-43 bomb shackle; 7 – top attachment assembly; 8 – top cross bar; 9 – top pulleys and frames; 10 – МВН-43 arming mechanisms; 11 – latch; 12 – rear beam; 13 – bottom cross bar; 14 – forward beam; 15 – metal sheet; 16 – tubes for hoist cable guiding; 17 – bracket for Дер3-43 shackle stowed position; 18 – bomb rack bottom attachment assembly; 19 – bottom pulleys; 20 – stop; 21 – pawl; 22 – unloading handle link rod.

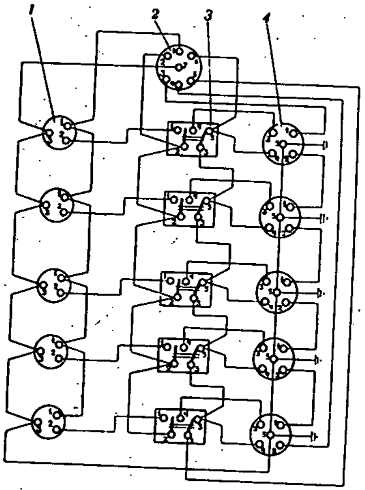

FIG. 16. КДЗ-433 BOMB RACK CIRCUIT DIAGRAM

1 – МВН-43 arming mechanism plug connector; 2 – [illegible] plug connector; 3 – БК-43М interlock switch box; 4 – plug connector of ПВД-43 release unit.

[redacted]

50X1-HUM

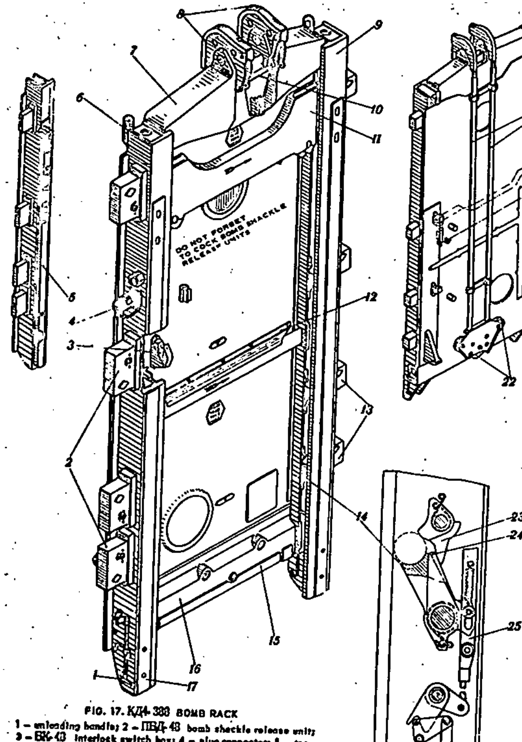

FIG. 17. КД4-333 BOMB RACK
1 – unloading handle; 2 – ПБД-48 bomb shackle release unit; 3 – ВК-43 interlock switch box; 4 – plug connector; 5 – top attachment assembly; 6 – top cross bar; 7 – pulleys and frames; 8 – forward beam (rail) of bomb rack; 9 – cable control switch handle; 10 – Дер4-43 shackle; 11 – plate; 12 – МДН-43 arming mechanisms; 13 – latch; 14 – protecting plate; 15 – bottom cross bar; 16 – rear beam (rail) of bomb rack; 17 – metal sheet; 18 – cable guiding tubes; 19 – bomb shackle stowed position bracket; 20 – bottom attachment assembly of bomb rack; 21 – hoisting system pulleys; 22 – stop; 23 – pawl; 24 – unloading handle link rod.

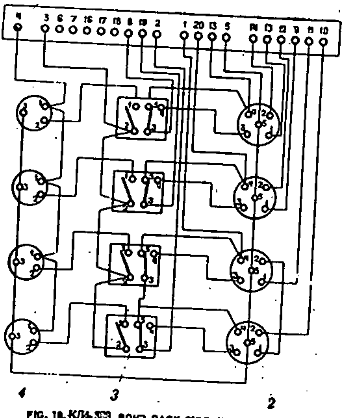

FIG. 18. КД4-333 BOMB RACK CIRCUIT DIAGRAM
1 – ШР48П20НШ plug connector; 2 – ПВД-43 release unit plug connector; 3 – ВК-43 interlock switch box; 4 – МДН-43 arming mechanism plug connector.

[redacted]

50X1-HUM

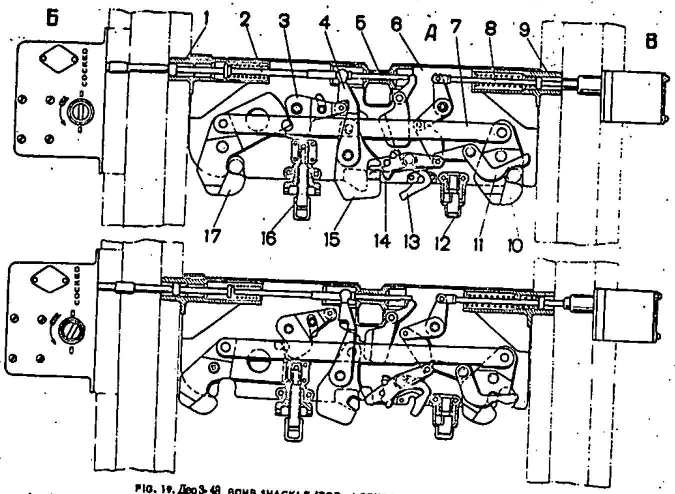

FIG. 19. Дер3-48 BOMB SHACKLE (TOP - LOCKED, BOTTOM - UNLOCKED)
А – Дер3-48 shackle; Б – ПБД-48 electromechanical bomb shackle release unit; В – МВН-48 arming mechanism; 1, 9 – trunnions; 2, 8 – pins; 3 – intermediate lever; 4 – release lever; 5 – tube; 6 – frame; 7 – carrying hook link; 10, 17 – carrying hooks; 11, 14 – followers; 12 – back stop; 13 – arming retainer; 15 – middle carrying hook; 16 – front stop.

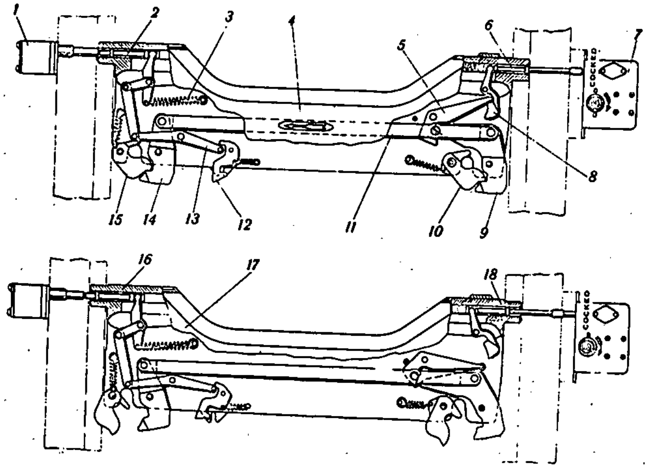

FIG. 20. Дер4-49 BOMB SHACKLE (TOP - LOCKED, BOTTOM - UNLOCKED)
1 – МВН-48 arming mechanism; 2 – pin; 3 – spring; 4 – frame; 5 – intermediate lever; 6 – release pin; 7 – ПБД-48 bomb shackle release unit; 8 – release lever; 9 – aft lever; 10, 15 – carrying hooks; 11 – carrying hook link; 12 – arming retainer; 13 – rocking arm; 14 – forward lever; 16, 18 – trunnions; 17 – frame.

[redacted]

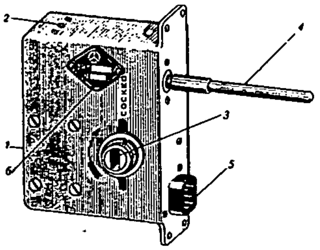

FIG. 21. ПБД-48 ELECTROMECHANICAL BOMB SHACKLE RELEASE UNIT
1 – case; 2 – mechanical trigger pin; 3 – slot for cocking the unit; 4 – releasing pin; 5 – plug; 6 – name plate.

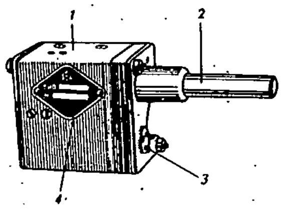

FIG. 22. MBH–48 ARMING MECHANISM
1 – case; 2 – arming pin; 3 – socket; 4 – name plate.

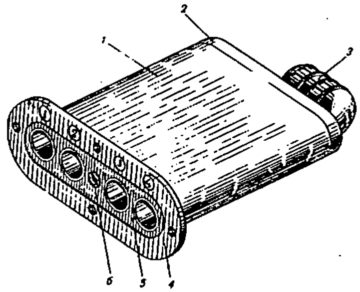

FIG. 23. ЭКСП-39 SIGNAL FLARE LAUNCHER
1 – casing; 2 – shoe; 3 – plug connector; 4 – flange; 5 – set of tubes; 6 – screw.

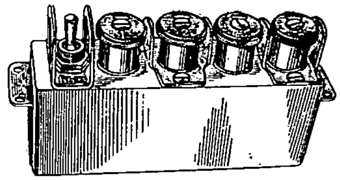

FIG. 24. SIGNAL FLARE CONTROL PANEL (ПУР)

[redacted]

50X1-HUM

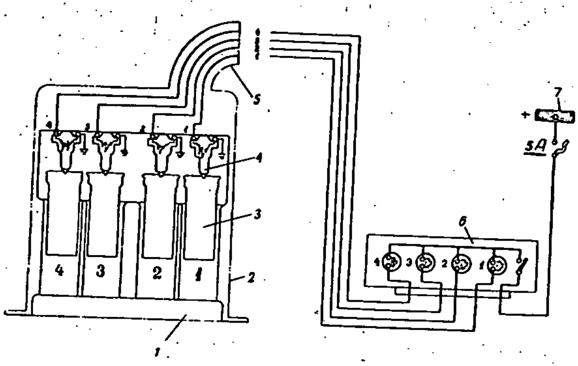

FIG. 25. CIRCUIT DIAGRAM OF ЭКСП-39 LAUNCHER CONTROL
1 – set of tubes; 2 – ЭКСП-39 launcher; 3 – signal flare cartridge; 4 – squib-initiated igniter; 5 – plug connector; 6 – signal flare control panel; 7 – co-pilot's circuit breaker panel.

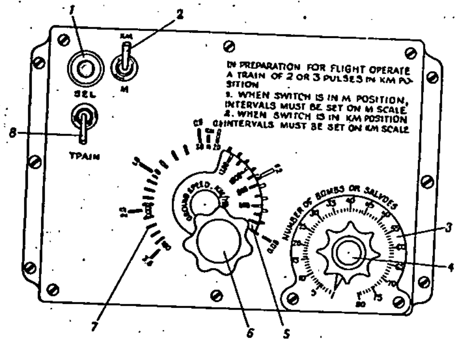

FIG. 26. ЭСБР-49А INTERVALOMETER
1 – indicator light; 2 – M - KM range switch; 3 – dial indicating number of bombs or salvoes per train; 4 – counter knob; 5 – ground speed dial; 6 – interval control knob; 7 – ground bomb spacing scale; 8 – TRAINSEL toggle switch.

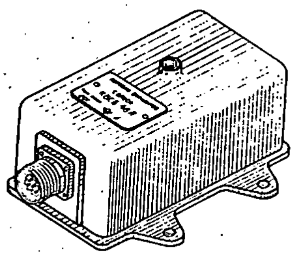

FIG. 27 КВСБ-48А BOMB RELEASE VARIATION BOX

[redacted]

50X1-HUM

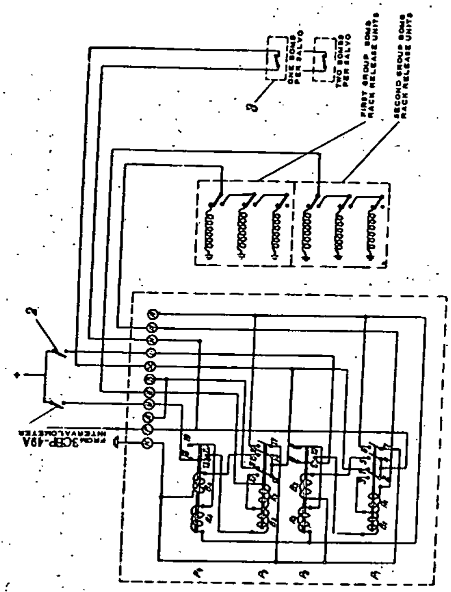

FIG. 28. CIRCUIT DIAGRAM OF КБСБ-48А BOMB RELEASE VARIATION BOX
1, 2 – 2В-45 switches; 3 – В-45 salvo switch.

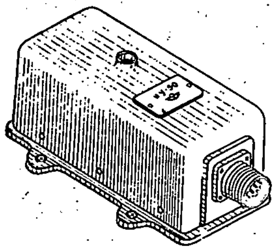

FIG. 29. ИУ-50 SPARK EXTINGUISHER

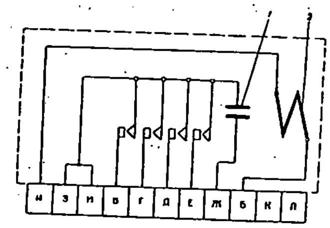

FIG. 30. CIRCUIT DIAGRAM OF ИУ-50 SPARK EXTINGUISHER
1 – capacitor; 2 – relay solenoid.

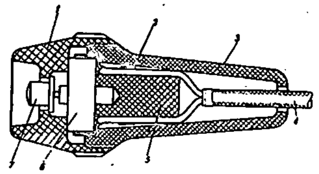

FIG. 31. КСБ-49 BOMB RELEASE BUTTON
(LONGITUDINAL SECTION)
1 – cap; 2 – thread; 3 – base; 4 – wire; 5 – block; 6 – switch;
7 – button.

[redacted]

50X1-HUM

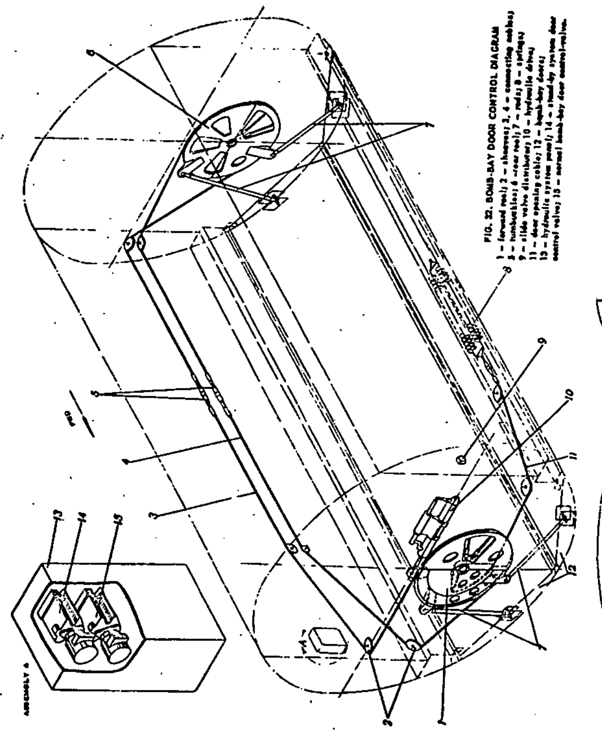

FIG. 32. BOMB-BAY DOOR CONTROL DIAGRAM

1 – forward reel; 2 – sheaves; 3, 4 – connecting cables; 5 – turnbuckles; 6 – rear reel; 7 – rods; 8 – springs; 9 – slide valve distributor; 10 – hydraulic drive; 11 – door opening cable; 12 – bomb-bay doors; 13 – hydraulic system panel; 14 – stand-by system door control valve; 15 – normal bomb-bay door control valve.

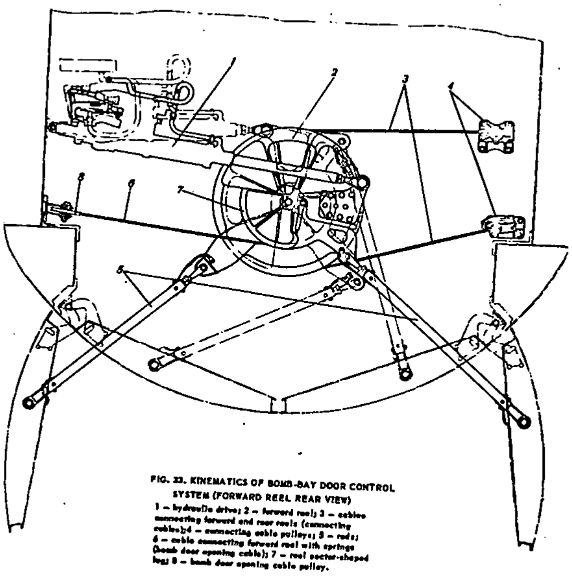

FIG. 33. KINEMATICS OF BOMB-BAY DOOR CONTROL SYSTEM (FORWARD REEL REAR VIEW)

1 – hydraulic drive; 2 – forward reel; 3 – cables connecting forward and rear reels (connecting cables); 4 – connecting cable pulleys; 5 – rods; 6 – cable connecting forward reel with springs (bomb door opening cable); 7 – reel sector-shaped legs; 8 – bomb door opening cable pulley.

50X1-HUM

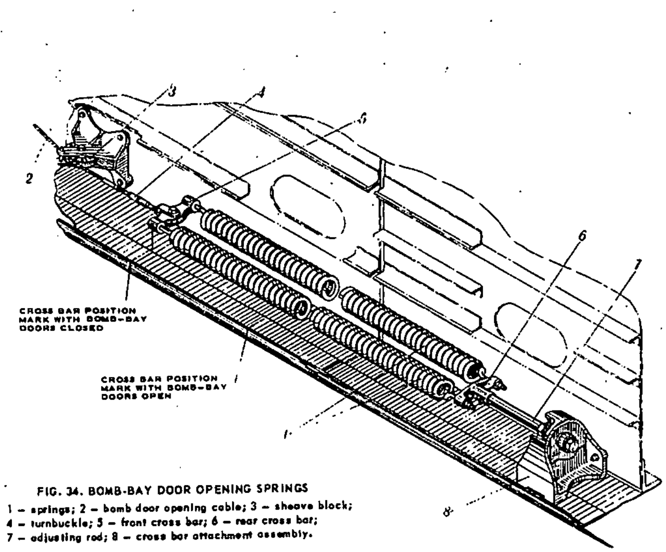

FIG. 34. BOMB-BAY DOOR OPENING SPRINGS

1 – springs; 2 – bomb door opening cable; 3 – sheave block; 4 – turnbuckle; 5 – front cross bar; 6 – rear cross bar; 7 – adjusting rod; 8 – cross bar attachment assembly.

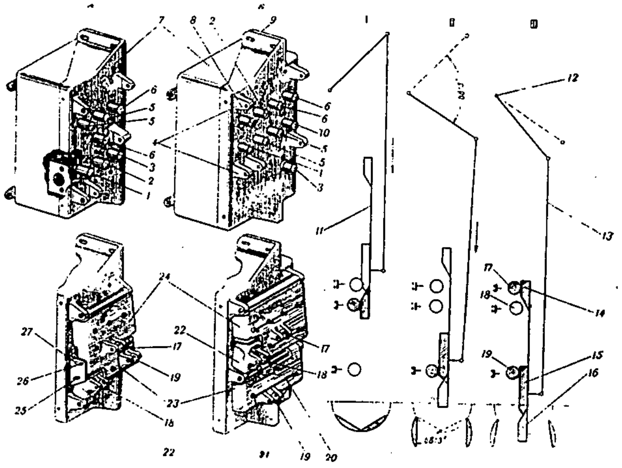

FIG. 35. BOMB-BAY LIMIT SWITCH BOX

1 – bomb-bay door closed position indication switch No. 1; 2 – bomb-bay door open position indication switch No. 2; 3 – emergency bomb release circuit interlock switch No. 3, used with aircraft mains de-energized; 4 – cover attachment lug; 5 – combat bomb release switches Nos 4 and 5; 6 – emergency bomb release switches Nos 6 and 7; 7 – box housing; 8 – switch No. 9 of emergency ARMED release relay; 9 – box attachment slot; 10 – automatic pilot interlock switch No. 8; 11 – carriage; 12 – axis of bomb-bay door control reel rotation; 13 – rod; 14 – wedge of carriage to press cover 24; 15 – wedge of carriage to press cover 23; 16 – wedge of carriage to press cover 22; 17 – actuating roller on cover engaging switches 2, 5, 6, 8 and 10; 18 – roller on cover engaging switch 1; 19 – roller on cover engaging switch 2; 20 – locking wire; 21 – adjusting screw; 22, 23, 24 – covers; 25, 26 – limiting screws; 27 – angle-piece.

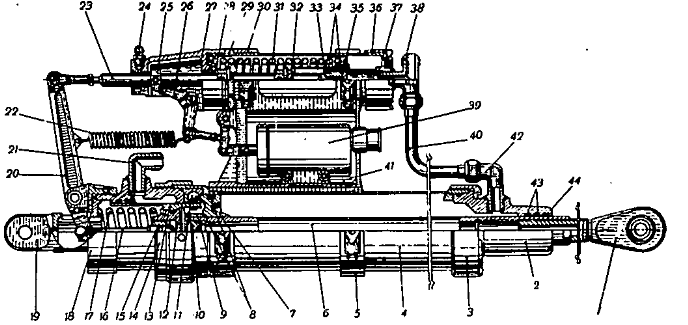

FIG. 36. HYDRAULIC DRIVE

1 – eye bolt; 2 – bush; 3 – nut; 4 – cylinder;5 – cover; 6 – piston rod; 7 – piston; 8 – sealing ring; 9 – check nut; 10 – plug; 11 – ball; 12 – bush; 13 – ball lock sleeve; 14 – nut; 15 – nut; 16 – rod; 17 – spring; 18 – captive nut; 19 – fork; 20 – lever; 21 – elbow-shaped connection; 22 – spring; 23 – piston rod; 24 – oil cup; 25 – stop; 26 – release lever; 27 – cover; 28 – stop; 29 – cylinder; 30 – cover; 31 – spring; 32 – bush; 33 – piston; 34 – sealing ring; 35 – piston; 36 – nut; 37 – barrel; 38 – T-piece; 39 – electric release unit; 40 – piping; 41 – bracket; 42 – elbow-shaped connection; 43 – sealing ring; 44 – ring.

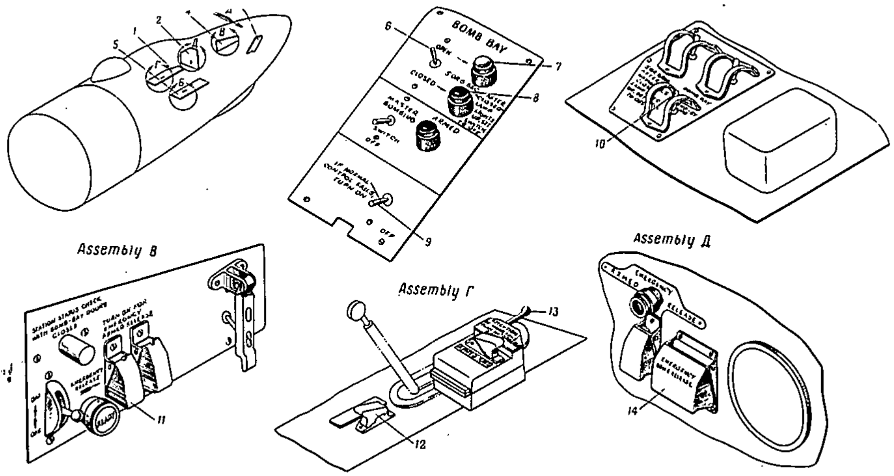

FIG. 37. BOMB-BAY DOOR CONTROL PANELS

1 – pilot's panel; 2 – pilot's instrument panel; 3 – bomb-bay door control panel; 4 – bomb release panel; 5 – pilots' middle panel; 6 – bomb-bay door normal control switch; 7 – bomb-bay door open position indicator light; 8 – bomb-bay door closed position indicator light; 9 – stand-by bomb-bay door opening switch; 10 – stand-by bomb-bay door closing switch; 11 – emergency door opening and emergency bomb release switch; 12 – switch to open bomb-bay doors on the ground with aircraft mains de-energized; 13 – handle for emergency bomb-bay door opening and emergency bomb release; 14 – switch of emergency bomb-bay door opening and emergency bomb release.

[redacted]

50X1-HUM

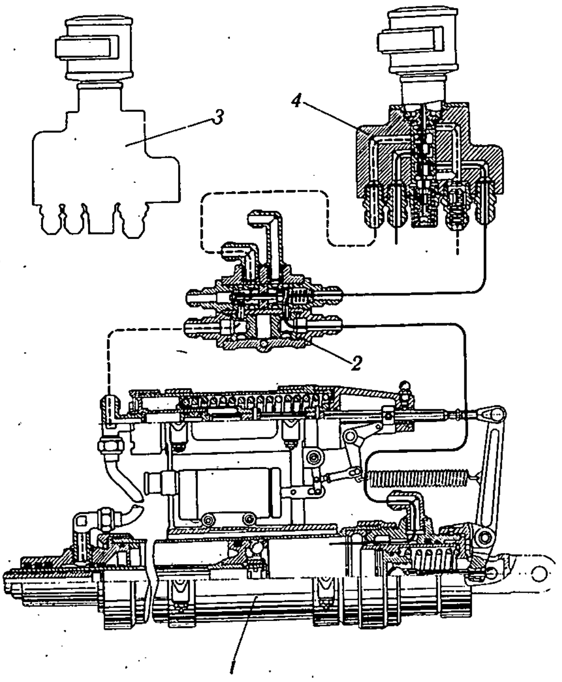

FIG. 38. KEY DIAGRAM OF BOMB-BAY DOOR OPENING (NORMAL CONTROL)
1 – hydraulic drive; 2 – slide valve distributor; 3 – stand-by bomb-bay door control system valve; 4 – normal bomb-bay door control system valve.

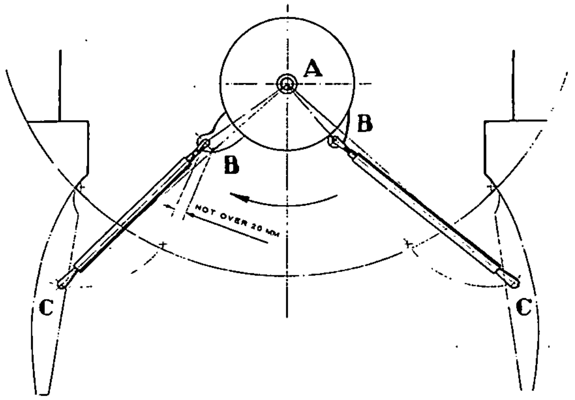

FIG. 39. DIAGRAM OF BOMB-BAY DOOR CONTROL ROD KINEMATIC LOCK

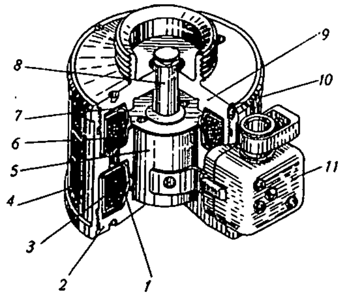

FIG. 40. ЭМ-12 ELECTROMAGNET
1 – coil frame; 2 – bottom cover; 3 – pull-in coil; 4 – housing; 5 – core; 6 – push-out coil; 7 – adjusting shim; 8 – rod; 9 – top cover; 10 – locking screw; 11 – plug connector.

[redacted]

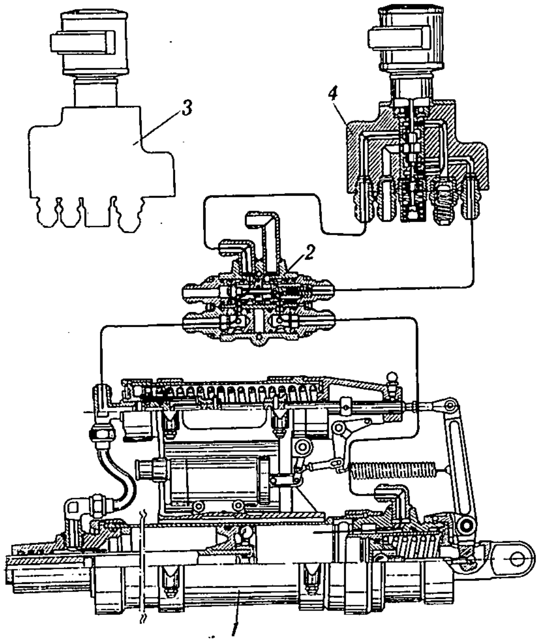

FIG. 41. DIAGRAM OF BOMB-BAY DOOR OPENING (EMERGENCY AND STAND-BY CONTROL)

1 – hydraulic drive; 2 – slide valve distributor; 3 – bomb-bay door stand-by control system valve; 4 – bomb-bay door normal control system valve.

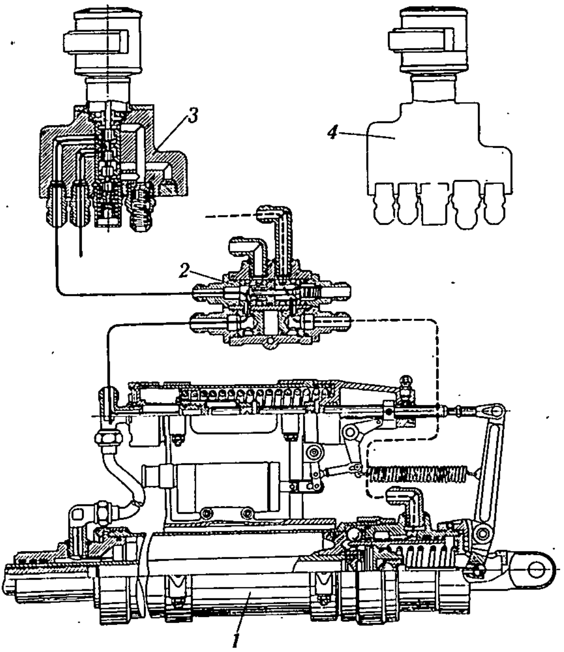

FIG. 42. DIAGRAM OF BOMB-BAY DOOR CLOSING (STAND-BY CONTROL)

1 – hydraulic drive; 2 – slide valve distributor; 3 – bomb door stand-by control system valve; 4 – bomb door normal control system valve.

[redacted]

50X1-HUM

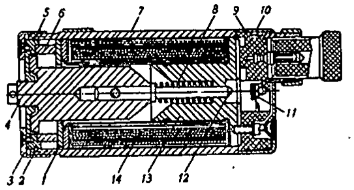

FIG. 43. ЭЛС-1 ELECTRIC RELEASE UNIT

1 – washer; 2 – pin; 3 – cover (rear); 4 – armature; 5 – guiding bush; 6 – ring; 7 – housing; 8 – spring; 9 – contact block; 10 – cover (front); 11 – contact system; 12 – insulating pin; 13 – stop; 14 – coil.

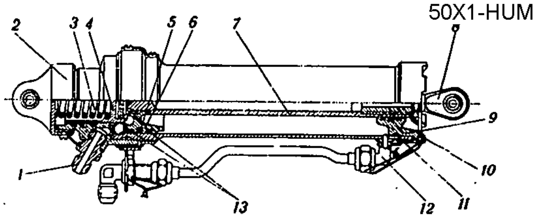

FIG. 45. PNEUMATIC DRIVE OF DOORS OF COMPARTMENT FOR COMMUNICATION AND SIGNALLING EQUIPMENT

1, 12 – connections; 2 – ball lock housing; 3 – spring; 4 – sleeve; 5, 11 – rubber gasket ring; 6 – piston; 7 – piston rod; 8 – eye bolt; 9 – bush; 10 – special nut; 13 – felt gasket.

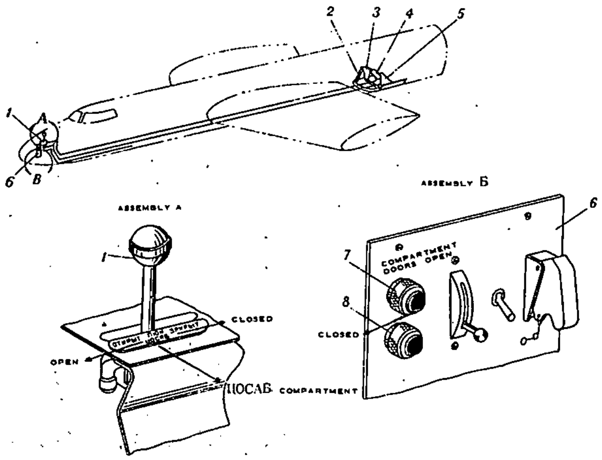

FIG. 44. ЦОСАБ COMPARTMENT DOOR CONTROL

1 – pneumatic valve; 2 – rods; 3 – bell crank; 4 – pneumatic drive; 5 – compartment doors; 6 – ЦОСАБ panel; 7 – compartment door open position indicator light; 8 – compartment door closed position indicator light.

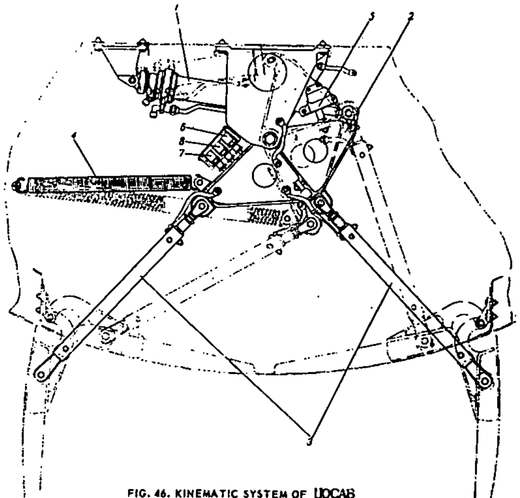

FIG. 46. KINEMATIC SYSTEM OF ЦОСАБ COMPARTMENT DOOR CONTROL

1 – pneumatic drive; 2 – bell crank; 3 – rod; 4 – spring; 5 – compartment door closed position indication switch; 6 – compartment door open position indication switch; 7 – emergency bomb release circuit interlock switch; 8 – combat bomb release circuit interlock switch.

[redacted]

50X1-HUM

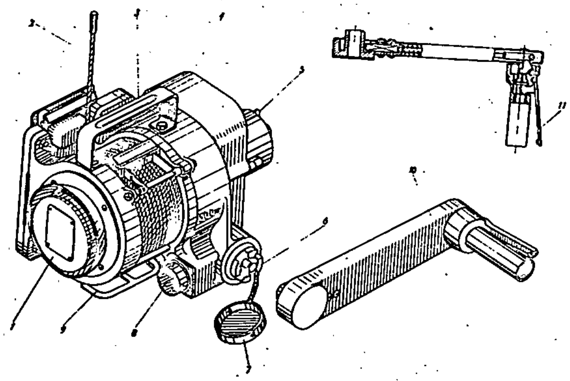

FIG. 47. ВЛ-473М ELECTROMECHANICAL HOIST

1 – МЛ-500 motor; 2 – hoist cable; 3 – handle; 4 – housing; 5 – electric brake clutch switch; 6 – crank adapter; 7 – crank adapter cap; 8 – hoist power supply plug connector; 9 – hoist securing slit nut handle; 10 – crank for manual operation; 11 – crank locking device.

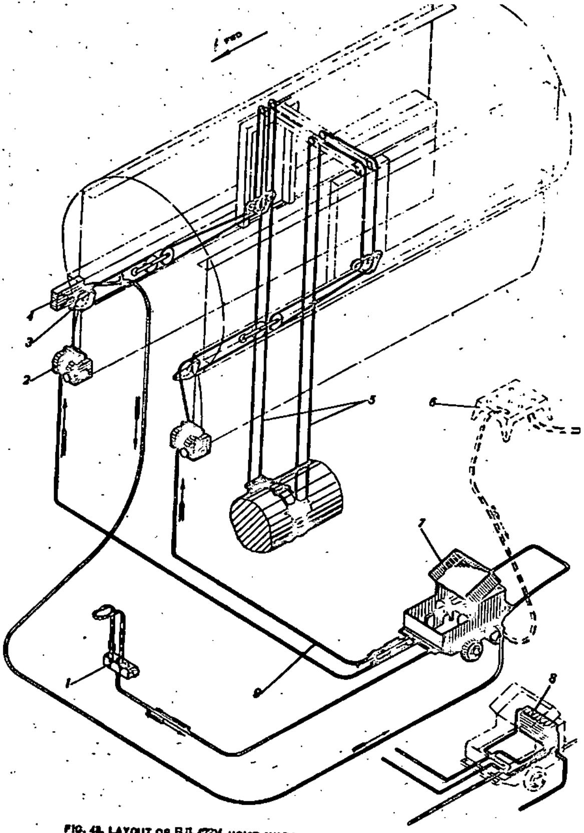

FIG. 48. LAYOUT OF ВЛ-473М HOIST SYSTEM UNITS AND POWER SUPPLY CONNECTIONS

1 – ПУЛ-473 control panel; 2 – ВЛ-473М electromechanical hoist; 3 – two-sheave end block; 4 – hoist system
power supply distribution box; 5 – hoist system cables; 6 – hoist system ground power supply source; 7 –
7 – ТСУЛ-473 trolley; 8 – СУЛ-473 control box; 9 – local power source flexible cables.

[redacted]

50X1-HUM

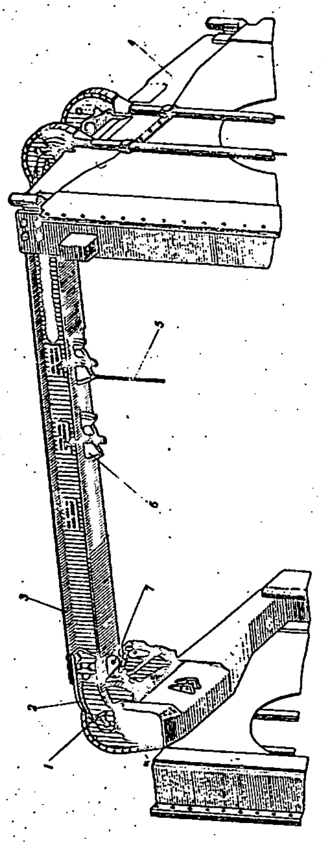

FIG. 49. BOMB HOISTING BEAM

1 – pin; 2 – beam attachment bracket; 3 – hoisting beam; 4 – bomb rack; 5 – hoisting cable; 6 – frame and pulleys; 7 – twin guy attachment lug.

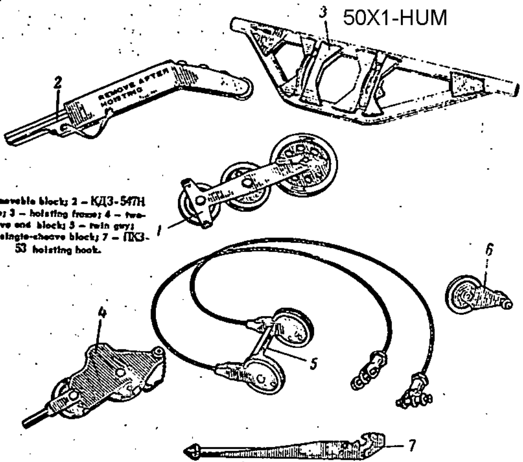

1 – movable block; 2 – КДЗ-547Н guide; 3 – hoisting frame; 4 – two-sheave end block; 5 – twin guy; 6 – single-sheave block; 7 – ПКЗ-53 hoisting hook.

FIG. 50. BOMB HOIST SYSTEM EQUIPMENT

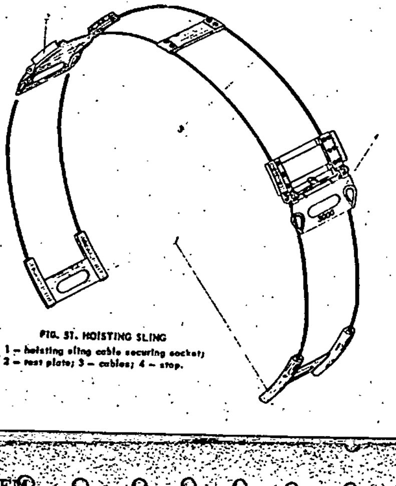

FIG. 51. HOISTING SLING

1 – hoisting sling cable securing socket; 2 – rest plate; 3 – cables; 4 – stop.

[redacted]

50X1-HUM

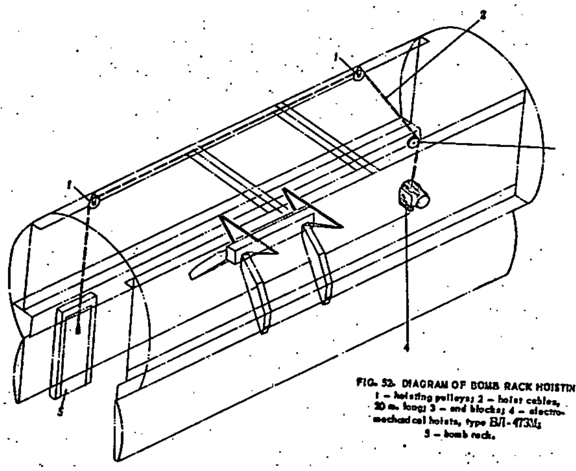

FIG. 52. DIAGRAM OF BOMB RACK HOISTING
1 – hoisting pulleys; 2 – hoist cables, 20 m. long; 3 – end blocks; 4 – electro-mechanical hoists, type БЛ-473М; 5 – bomb rack.

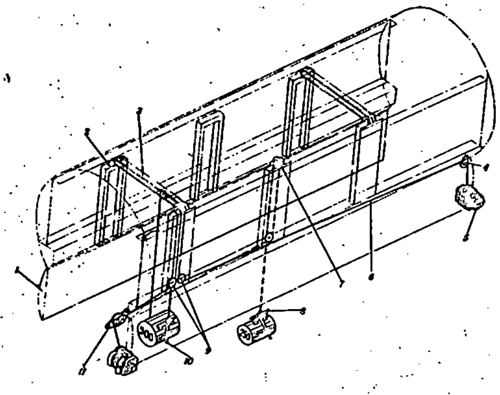

FIG. 53. DIAGRAM OF BOMB HOISTING TO КД3-488 BOMB RACK
1 – bomb-bay door; 2 – КД3-83 bomb rack; 3 – hoisting beam; 4 – single-sheave end block; 5 – БЛ-473М electric hoist; 6 – БЛ-473М hoist cable, 20 m. long; 7 – bomb rack top pulleys; 8 – Дер 3-43 bomb shackle; 9 – bomb rack bottom pulleys; 10 – ПКЗ-53 hoisting hook; 11 – two-sheave end block.

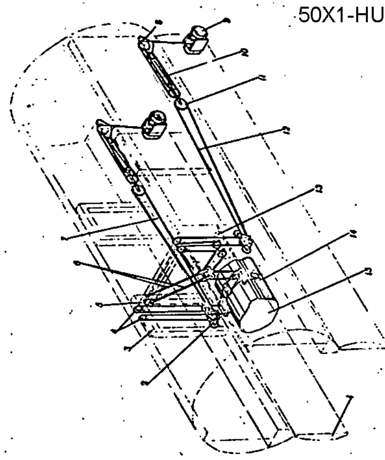

FIG. 55. DIAGRAM OF ФАБ-3000 М-46 BOMB HOISTING TO BOTTOM STATION OF STARBOARD КД4-388 BOMB RACK.
1 – bomb-bay door; 2 – bottom pulleys of КД4 bomb rack; 3 – КД4-388 bomb rack; 4 – top pulleys of КД4 bomb rack; 5 – hoisting beams; 6 – twin guy; 7 – hoisting sling cable, 13.75 m. long; 8 – two-sheave end block; 9 – БЛ-473М electromechanical hoist; 10 – hoist cable, 20 m. long; 11 – movable block; 12 – hoist cable, 14.8 m. long; 13 – hoisting frame; 14 – hoisting sling; 15 – load.

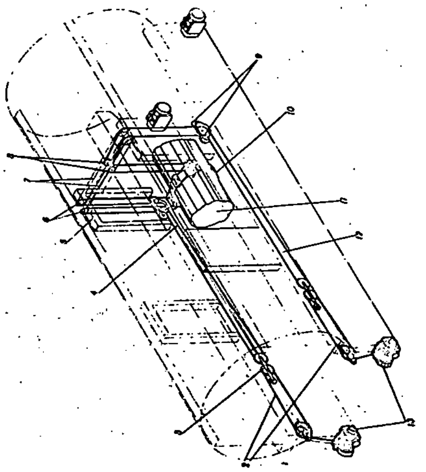

FIG. 54. DIAGRAM OF BOMB HOISTING TO КД4-388 BOMB RACK
1 – two-sheave end block; 2 – hoist cables, 20 m. long; 3 – movable block; 4 – hoisting sling cable, 13.75 m. long; 5 – КД4-388 bomb rack; 6 – top pulleys of КД4 bomb rack; 7 – hoisting beams; 8 – hoisting beam pulleys; 9 – bottom pulleys of КД4 bomb rack; 10 – hoisting sling; 11 – load; 12 – hoisting sling cable, 14.8 m. long; 13 – БЛ-473М hoists.

50X1-HUM

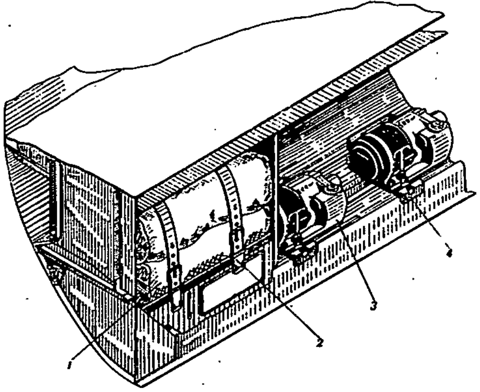

FIG. 56. HOIST SYSTEM STOWED PARTS AND UNITS
1 – bag for hoist system parts; 2 – straps 3 – electromechanical hoist, БЛ-473М ;
4 – bracket for БЛ-473М hoist stowed position.

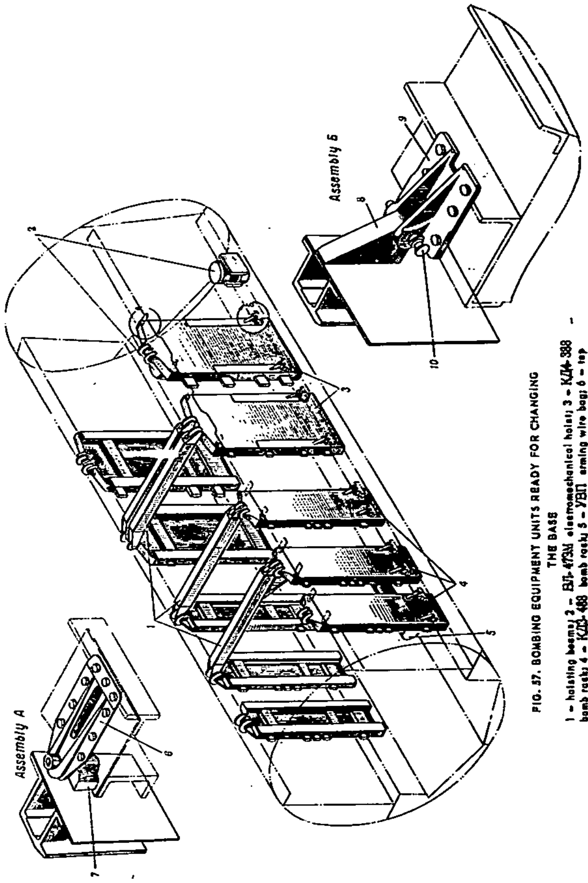

FIG. 57. BOMBING EQUIPMENT UNITS READY FOR CHANGING THE BASE
1 – hoisting beams; 2 – БЛ-473М electromechanical hoist; 3 – КД4-388 bomb rack; 4 – КД3-488 bomb rack; 5 – УВП arming wire bag; 6 – top attachment assembly to install bomb rack on horizontal fuselage boom; 7 – bomb rack top attachment assembly; 8 – bomb rack bottom attachment assembly; 9 – attachment assembly to install bomb rack on beam; 10 – easy-to-remove attachment bolt.

[redacted]

50X1-HUM

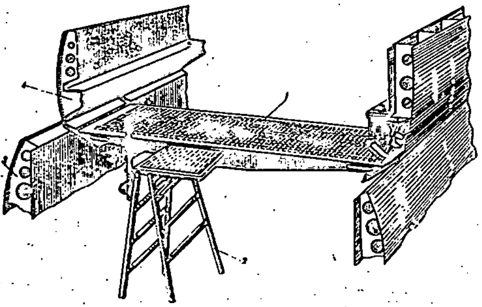

FIG. 58. CATWALK AND SERVICE LADDER. GENERAL VIEW
1 – catwalk; 2 – service ladder; 3 – bomb-bay door; 4 – beam.

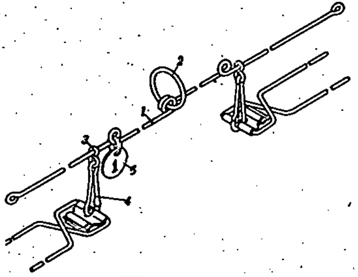

FIG. 59. УВП ARMING WIRE (No. 1)
1 – wire; 2 – arming ring; 3 – S-shaped ring; 4 – snap hook; 5 – number tag.

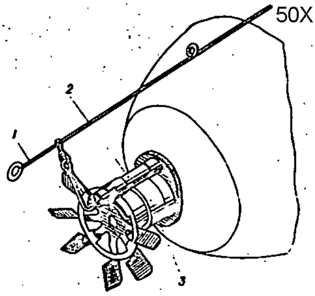

FIG. 60. LOCKING OF АПУВ-1 FUZE WITH МДВ-1 DELAYED COCKING MECHANISM
1 – УВП-1 arming wire; 2 – МДВ-1 delayed cocking mechanism; 3 – АПУВ-1 fuze.

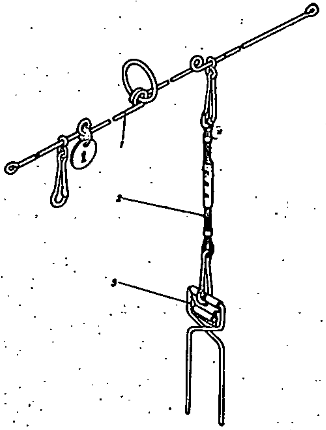

FIG. 61. УВП ARMING WIRE NO. 1 WITH ADDITIONAL LINK CABLE FOR FLARE BOMBS
1 – arming wire; 2 – additional link cable; 3 – locking fork.

[redacted]

50X1-HUM

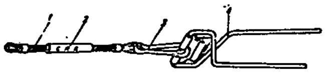

FIG. 62. ADDITIONAL LINK CABLE FOR FLARE BOMBS (CAB)
1 – cable; 2 – tube; 3 – snap hook; 4 – locking fork.

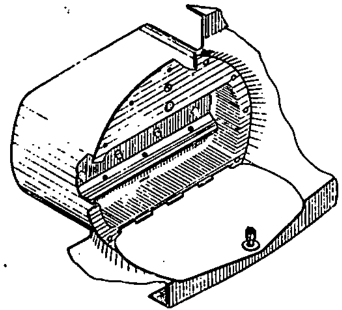

FIG. 63. INTERLOCK SYSTEM SWITCH BOX

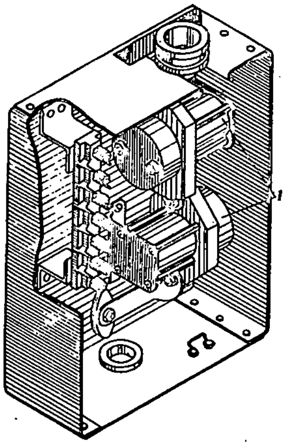

FIG. 64. DISTRIBUTION BOX OF EMERGENCY BOMB RELEASE (WITH MAINS DE-ENERGIZED) SYSTEM
1 – К-50Д emergency release relay.

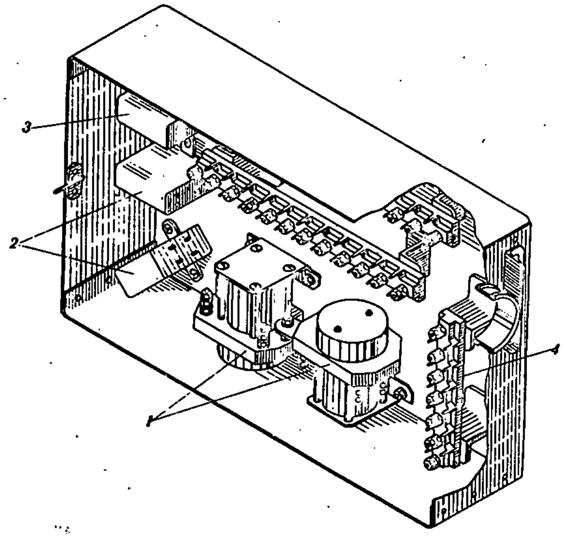

FIG. 65. EMERGENCY BOMB RELEASE DISTRIBUTION BOX
1 – К-50Д emergency release relay; 2 – emergency release control relay; 3 – РП-2 feed relay of ARMED release indication circuit; 4 – terminal block.

[redacted]

50X1-HUM

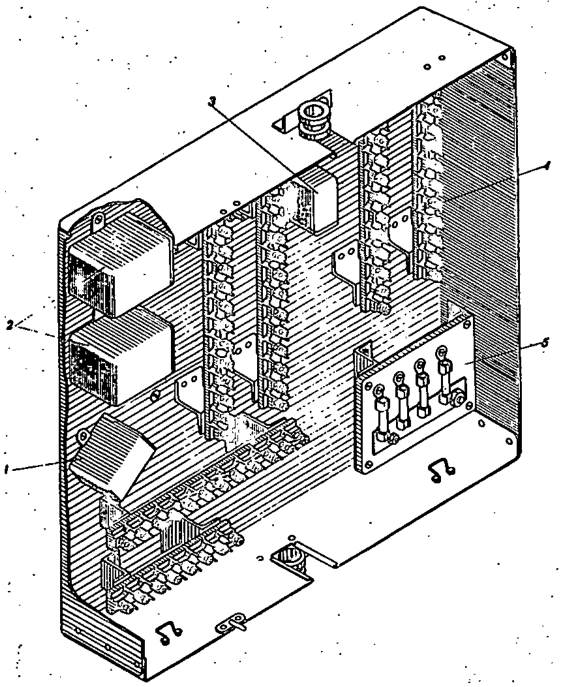

FIG. 66. BOMB RELEASE DISTRIBUTION BOX

1 – РП-3 relay to cut out КД3-488 bomb rack of rear row; 2 – РП-6 relay of combat release circuit; 3 – РП-2 feed relay of MBH-48 arming mechanism; 4 – terminal block; 5 – СП-5 fuse panel.

[redacted]

50X1-HUM

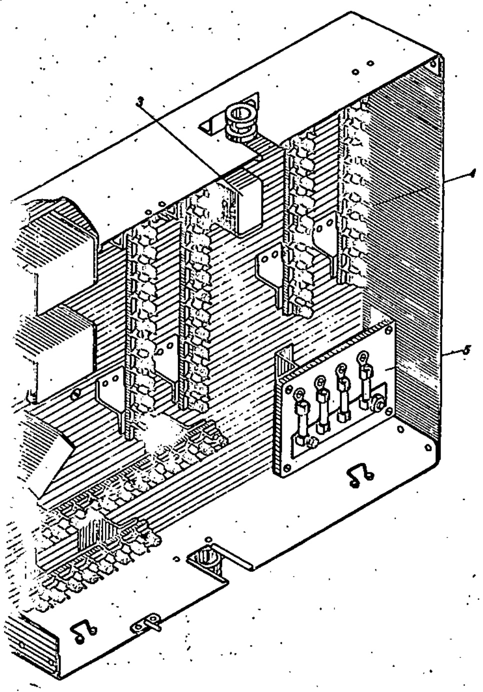

FIG. 66. BOMB RELEASE DISTRIBUTION BOX
3 relay to cut out КДЗ-488 bomb rack of rear row; 2 – РП-6 relay of combat release
3 – РП-2 feed relay of MBH-48 arming mechanism; 4 – terminal block; 5 – СП-5 fuse panel.

FIG. 67. BOMBING EQUIPMENT CIRCUIT DIAGRAM (AIRCRAFT OF EARLIER MAKE

1 – BH–45 switch of stand-by bomb-bay door opening system; 2 – BH–45 switch of stand-by bomb-bay door cl
door operation control switch, ПН-45; 4 – ЗЛС-1 solenoid of stand-by door opening system; 5 – ЗУ-12 sole
system; 6 – bomb door opening solenoid, ЗУ-12; 7 – bomb release circuits interlock switch, 2B–45 (used du
8 – PT–40 relay of emergency release bomb door closing circuit interlock system; 9 – bomb door closing sw
bomb release limit switch, BK2–142B; 12 – bomb-bay door closed position indication limit switch, BK2–142
relay, РП-6; 14 – bomb-bay door open position indicator light, СЛЦ-51; 15 – ARMED release indicator ligh
switch, П-4; 17 – bomb door closed position indicator light, СЛЦ-51; 18 – navigator's READY TO DROP in
19 – station status indicator light, СЛЦ-51; 20 – bomb-bay door open position indication limit switch, BK2–14

plug connector, assemblies $\frac{1-2}{3-4}$, portside; 22 – КД-4-388 bomb rack plug connector, assemblies 2 – 4,

23 – КДЗ-488 bomb rack plug connector, assemblies 6 – 8, portside; 24 – КД4-388 bomb rack plug connector,
25 – КДЗ-488 bomb rack plug connector, assemblies 11 – 12, portside; 26 – КДЗ-488 bomb rack plug connect

$\frac{1-2}{3-4}$, starboard; 27 – КД4-388 bomb rack plug connector, assemblies 2 – 4, $\frac{5-7}{6-9}$, starboard; 28 – КДЗ-4

assemblies 6 – 8, starboard; 29 – КД4-388 bomb rack plug connector, assemblies 10 – 12, starboard; 30 – К
tor, assemblies 11 – 12, starboard; 31 – station status (with bomb-bay doors closed) check button, BK2–142B;
socket, 48K; 33 – course stabilizer, АПБ-2М; 34 – navigator's combat bomb release button, КСБ-49; 35 – ne
release button, КСБ-49; 36 – intervalometer, ЭСБР-49А; 37 – navigator-operator's READY TO DROP indica
relay of ЭСБР-49А and ARMED feed circuits interlock system; 39 – master bombing switch, 2B–45; 40 – spe
41 – duplicate feed bus (navigator's left-hand circuit breaker panel); 42 – B–45 switch of rear КДЗ-488 bomb
row bomb rack (КДЗ-488) cut-out relay, РП-3; 44 – 2B–45 switch of rack selector relay; 45 – salvo switch,
box, КВСБ-48; 47 – duplicate feed bus (navigator's right-hand circuit breaker panel); 48 – duplicate feed bus,
ARMED release switch; B–45; 50 – pilot's emergency ARMED release switch, B–45; 51 – navigator's ARME
B–45; 52 – pilot's emergency bomb release switch, B–45; 53 – navigator's emergency bomb release switch,
release limit switch, BK2–142B; 56 – KOC–45 dome lamp indicating that the bomb release circuit and bomb
for working in bomb bay; 57 – pilot's ARMED release indicator light, СЛЦ-51; 58 – BK–44 limit switch of do
release circuit is blocked; 59 – emergency bomb release control relay, РП-2; 60 – B–45 switch of indication
work in bomb bay); 61 – emergency bomb door opening solenoid, ЗЛС-1; 62 – BK2–142B interlock limit swit
de-energized; 63 – K-50Д relay of emergency bomb release circuit with mains de-energized; 64 – emergency b
65 – bomb release control panel, with mains de-energized; 66 – feed bus of fuel pumps distribution box on fra
pumps distribution box on frame No. 49; 68, 69 – plug connector socket to connect БЛ-473М h

[redacted]

50X1-HUM

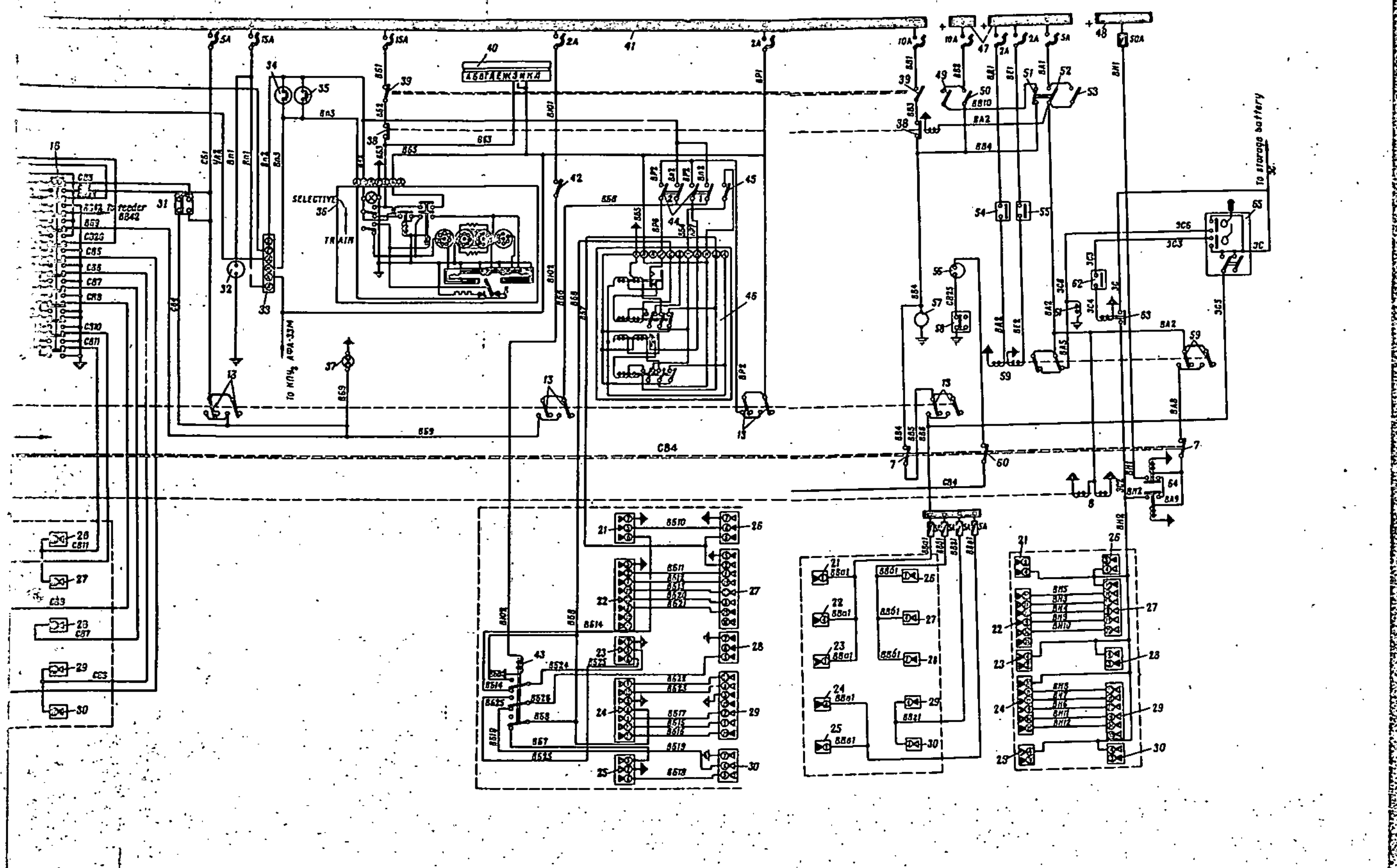

[redacted]

50X1-HUM

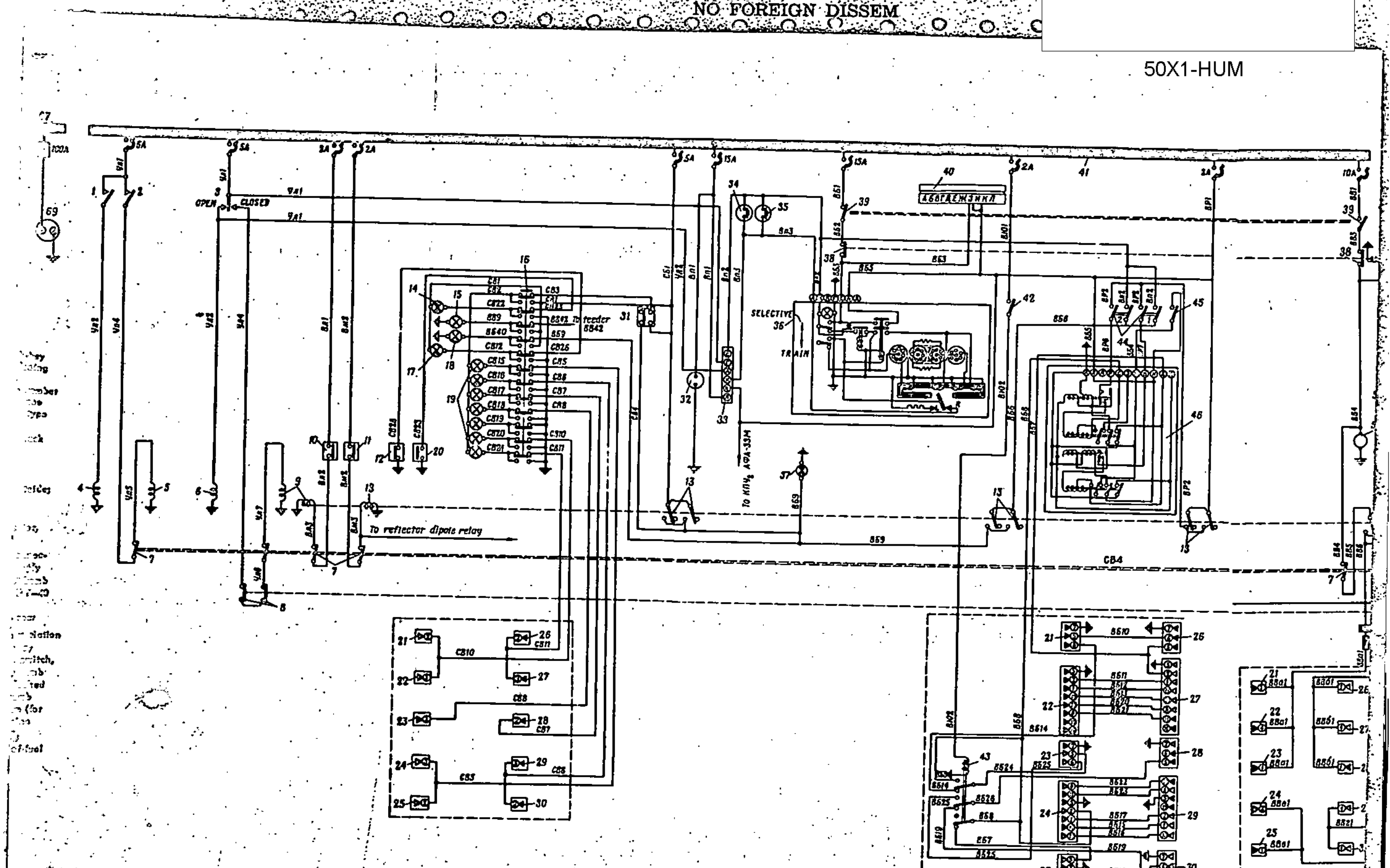

[redacted]

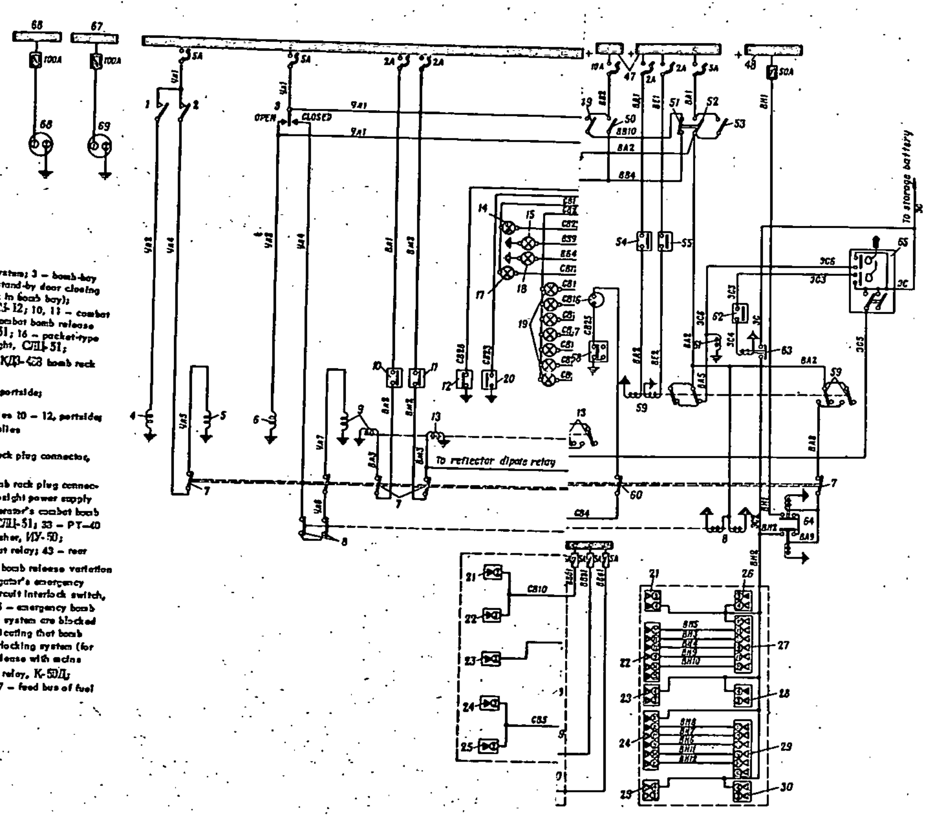

IPMENT CIRCUIT DIAGRAM (AIRCRAFT OF EARLIER MAKE)

ning system; 2 – BH–45 switch of stand-by bomb-bay door closing system; 3 – bomb-bay
1 solenoid of stand-by door opening system; 5 – ЭЗ-12 solenoid of stand-by door closing
; 7 – bomb release circuits interlock switch, 2B–45 (used during work in bomb bay);
or closing circuit interlock system; 9 – bomb door closing solenoid, ЭЗ-12; 10, 11 – combat
-bay door closed position indication limit switch, BK2-142B; 13 – combat bomb release
indicator light, СЛЦ-51; 15 – ARMED release indicator light, СЛЦ-51; 16 – pocket-type
icator light, СЛЦ-51; 18 – navigator's READY TO DROP indicator light, СЛЦ-51;
– bomb-bay door open position indication limit switch, BK2-142B; 21 – КДЗ-438 bomb rack

22 – КД-4-388 bomb rack plug connector, assemblies 2 – 4, $\frac{5-7}{6-9}$, portside;

lies 6 – 8, portside; 24 – КДЗ-388 bomb rack plug connector, assemblies 10 – 12, portside;
ies 11 – 12, portside; 25 – КДЗ-438 bomb rack plug connector, assemblies

connector, assemblies 2 – 4, $\frac{5-7}{6-9}$, starboard; 28 – КДЗ-438 bomb rack plug connector,

rack plug connector, assemblies 10 – 12, starboard; 30 – КДЗ-438 bomb rack plug connec-
ture (with bomb-bay doors closed) check button, BK2-142B; 32 – bombsight power supply
– navigator's combat bomb release button, КСВ-О; 35 – navigator-operator's combat bomb
Р-ОЛ; 37 – navigator-operator's READY TO DROP indicator light, СЛЦ-51; 38 – PT–40
rack system; 39 – master bombing switch, 2B–45; 40 – spark extinguisher, ИУ-50;
it breaker panel); 42 – B–45 switch of rear КДЗ-438 bomb rack cutout relay; 43 – rear
– 2B–45 switch of rack selector relay; 45 – salvo switch, B–45; 46 – bomb release variation
's right-hand circuit breaker panel); 48 – duplicate feed bus; 49 – navigator's emergency
cy ARMED release switch, B–45; 51 – navigator's ARMED release circuit interlock switch,
, B–45; 53 – navigator's emergency bomb release switch, B–45; 54, 55 – emergency bomb
e lamp indicating that the bomb release circuit and bomb door closing system are blocked
se indicator light, СЛЦ-51; 58 – BX–44 limit switch of dome lamp indicating that bomb
ase control relay, РП-2; 60 – B–45 switch of indication circuit interlocking system (for
g solenoid, ЭПС-1; 62 – BK2-142B interlock limit switch of bomb release with mains
release circuit with mains de-energized; 64 – emergency bomb release relay, К-50Д;
nel); 66 – feed bus of fuel pumps distribution box on frame No. 33; 67 – feed bus of fuel
7; 68, 69 – plug connector socket to connect ВЛ-473Ш hoist.

[redacted]

50X1-HUM

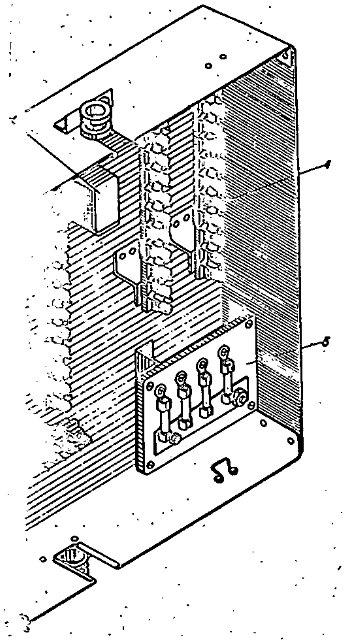

RELEASE DISTRIBUTION BOX

rack of rear row; 2 – РП-6 relay of combat release
cocking mechanism; 4 – terminal block; 5 – СП-5 fuse
panel.

FIG. 67. BOMBING EQUIPMENT CIRCUIT DIAGRAM (AIRCRAFT OF EARLIER MAK

1 – BH–45 switch of stand-by bomb-bay door opening system; 2 – BH–45 switch of stand-by bomb-bay door
door operation control switch, ПН-45; 4 – ЗЛС-1 solenoid of stand-by door opening system; 5 – ЭЪ-12 sol
system; 6 – bomb door opening solenoid, ЭЪ-12; 7 – bomb release circuits interlock switch, 2B–45 (used d
8 – PT–40 relay of emergency release bomb door closing circuit interlock system; 9 – bomb door closing s
bomb release limit switch, BK2–142B; 12 – bomb-bay door closed position indication limit switch, BK2–142
relay, РП-6; 14 – bomb-bay door open position indicator light, СЛЦ-51; 15 – ARMED release indicator lig
switch, П-4; 17 – bomb door closed position indicator light, СЛЦ-51; 18 – navigator's READY TO DROP
19 – station status indicator light, СЛЦ-51; 20 – bomb-bay door open position indication limit switch, BK2–14

plug connector, assemblies $\frac{1-2}{3-4}$, portside; 22 – КД-4-388 bomb rack plug connector, assemblies 2 – 4,

23 – КДЗ-488 bomb rack plug connector, assemblies 6 – 8, portside; 24 – КД4-388 bomb rack plug connector
25 – КДЗ-438 bomb rack plug connector, assemblies 11 – 12, portside; 26 – КДЗ-488 bomb rack plug connect

$\frac{1-2}{3-4}$, starboard; 27 – КД4-388 bomb rack plug connector, assemblies 2 – 4, $\frac{5-7}{6-9}$, starboard; 28 – КДЗ-4
assemblies 6 – 8, starboard; 29 – КД4-388 bomb rack plug connector, assemblies 10 – 12, starboard; 30 – К
tor, assemblies 11 – 12, starboard; 31 – station status (with bomb-bay doors closed) check button, BK2–142B;
socket, 48К; 33 – course stabilizer, АПБ-2М; 34 – navigator's combat bomb release button, КСБ-49; 35 –
release button, КСБ-49; 36 – intervalometer, ЭСБР-49А; 37 – navigator-operator's READY TO DROP indic
relay of ЭСБР-49А and ARMED feed circuits interlock system; 39 – master bombing switch, 2B–45; 40 – s
41 – duplicate feed bus (navigator's left-hand circuit breaker panel); 42 – B–45 switch of rear КДЗ-488 bomb
row bomb rack (КДЗ-488) cut-out relay, РП-3; 44 – 2B–45 switch of rack selector relay; 45 – salvo switch,
box, КВСБ-48; 47 – duplicate feed bus (navigator's right-hand circuit breaker panel); 48 – duplicate feed bus
ARMED release switch, B–45; 50 – pilot's emergency ARMED release switch, B–45; 51 – navigator's ARME
B–45; 52 – pilot's emergency bomb release switch, B–45; 53 – navigator's emergency bomb release switch,
release limit switch, BK2–142B; 56 – KOC–45 dome lamp indicating that the bomb release circuit and bomb
for working in bomb bay; 57 – pilot's ARMED release indicator light, СЛЦ-51; 58 – BK–44 limit switch of d
release circuit is blocked; 59 – emergency bomb release control relay, РП-2; 60 – B–45 switch of indication
work in bomb bay); 61 – emergency bomb door opening solenoid, ЗЛС-1; 62 – BK2–142B interlock limit swit
de-energized; 63 – К-50Д relay of emergency bomb release circuit with mains de-energized; 64 – emergency
65 – bomb release control panel, with mains de-energized; 66 – feed bus of fuel pumps distribution box on fr
pumps distribution box on frame No. 49; 68, 69 – plug connector socket to connect ВЛ-473М

[redacted]

50X1-HUM

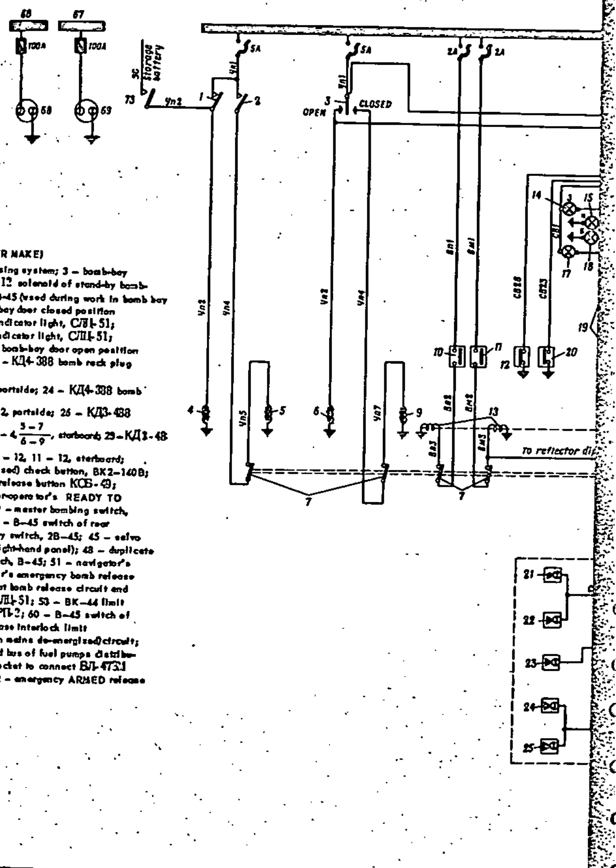

FIG. 68. BOMBING EQUIPMENT CIRCUIT DIAGRAM (AIRCRAFT OF LATER MAKE)

1 – BH–45 switch of stand-by bomb-bay door opening system; 2 – BH–45 switch of stand-by bomb-bay door closing system; 3 – bomb-bay door operation control switch, ПН-45; 4 – ЭЛС-1 solenoid of stand-by bomb-bay door opening system; 5 – ЭМ-12 solenoid of stand-by bomb-bay door closing system; 6 – bomb door opening solenoid, ЭМ-12; 7 – bomb release circuit interlock switch, 2B-45 (used during work in bomb bay 9 – bomb-bay door closing solenoid, ЭМ-12; 10, 11 – combat bomb release limit switch, BK2–142B; 12 – bomb-bay door closed position indication limit switch; BK2–142B; 13 – combat bomb release relay, РП-6; 14 – bomb-bay door open position indicator light, СЛЦ-51; 15 – ARMED release indicator light, СЛЦ-51; 16 – pocket-type switch, П-4; 17 – bomb door closed position indicator light, СЛЦ-51; 18 – navigator's READY TO DROP indicator light, СЛЦ-51; 19 – station status indicator light, СЛЦ-51; 20 – bomb-bay door open position indication limit switch, BK2–142B; 21 – КДЗ-488 bomb rack plug connector, assemblies $\frac{1-2}{3-4}$, portside; 22 – КД4-388 bomb rack plug connector, assemblies 2 – 4, $\frac{5-7}{6-9}$, portside; 23 – КДЗ-488 bomb rack plug connector, assemblies 6 – 8, portside; 24 – КД4-388 bomb rack plug connector, assemblies 10 – 12, portside; 25 – КДЗ-488 bomb rack plug connector, assemblies 11 – 12, portside; 26 – КДЗ-488 bomb rack plug connector, assemblies $\frac{1-2}{3-4}$, starboard; 27 – КД4-388 bomb rack plug connector, assemblies 2 – 4 $\frac{5-7}{6-9}$, starboard; 29 – КДЗ-48 bomb rack plug connector, assemblies 6 – 8, starboard; 29 – КД4-388 bomb rack plug connector, assemblies 10 – 12, 11 – 12, starboard; 30 – КДЗ-488 bomb rack plug connector, assemblies 11 – 12, starboard; 31 – station status (with bomb door closed) check button, BK2–140B; 32 – bombsight power supply receptacle, 48K; 33 – course stabilizer, АП-5-2М; 34 – navigator's combat bomb release button КСБ-49; 35 – navigator-operator's combat bomb release button, КСБ-49; 36 – intervalometer, ЭСБР-49А; 37 – navigator-operator's READY TO DROP indicator light, СЛЦ-51; 38 – PT–40 relay of intervalometer and ARMED feed circuit interlock system; 39 – master bombing switch, 2B–45; 40 – spark extinguisher, ИУ-50; 41 – duplicate feed bus (navigator's left-hand circuit breaker panel); 42 – B–45 switch of rear КДЗ-488 bomb rack cut-out relay; 43 – КДЗ-488 rear row bomb rack cut-out relay, РП-3; 44 – rack selector relay switch, 2B–45; 45 – salvo switch, B–45; 46 – bomb release variation box, КВСБ-48; 47 – duplicate feed bus (navigator's circuit breaker right-hand panel); 48 – duplicate feed bus; 49 – navigator's emergency ARMED release switch, B–45; 50 – pilot's emergency ARMED release switch, B–45; 51 – navigator's ARMED release circuit interlock switch, B–45; 52 – pilot's emergency bomb release switch, B–45; 53 – navigator's emergency bomb release switch, B–45; 54, 55 – emergency bomb release limit switch, BK2–142B; 56 – KOC–45 dome lamp indicating that bomb release circuit and bomb-bay door closing system are blocked (for work in bomb bay); 57 – pilot's ARMED release indicator light, СЛЦ-51; 58 – BK–44 limit switch of dome lamp indicating that bomb release circuit is blocked; 59 – emergency bomb release control relay, РП-2; 60 – B–45 switch of indication circuit interlocking (for work in bomb bay); 61 – emergency bomb door opening ЭЛС-1; 62 – bomb release interlock limit switch, BK2–142B (with mains de-energized); 63 – emergency bomb К-50Д relay of emergency bomb release (with mains de-energized) circuit; 64 – emergency bomb release relay, К-50Д; 65 – bomb release control panel (with mains de-energized), 66 – feed bus of fuel pumps distribution box on frame No. 33; 67 – feed bus of fuel pumps distribution box on frame No. 49; 68, 69 – plug connector socket to connect ВЛ-473Д hoist; 70 – ARMED release indication relay, РП-2; 71 – РП-2 relay of MBH–48 arming mechanism feed line; 72 – emergency ARMED release limit switch, BK2–142B; 73 – B–45 switch of bomb door opening with mains de-energized.

[redacted]

50X1-HUM

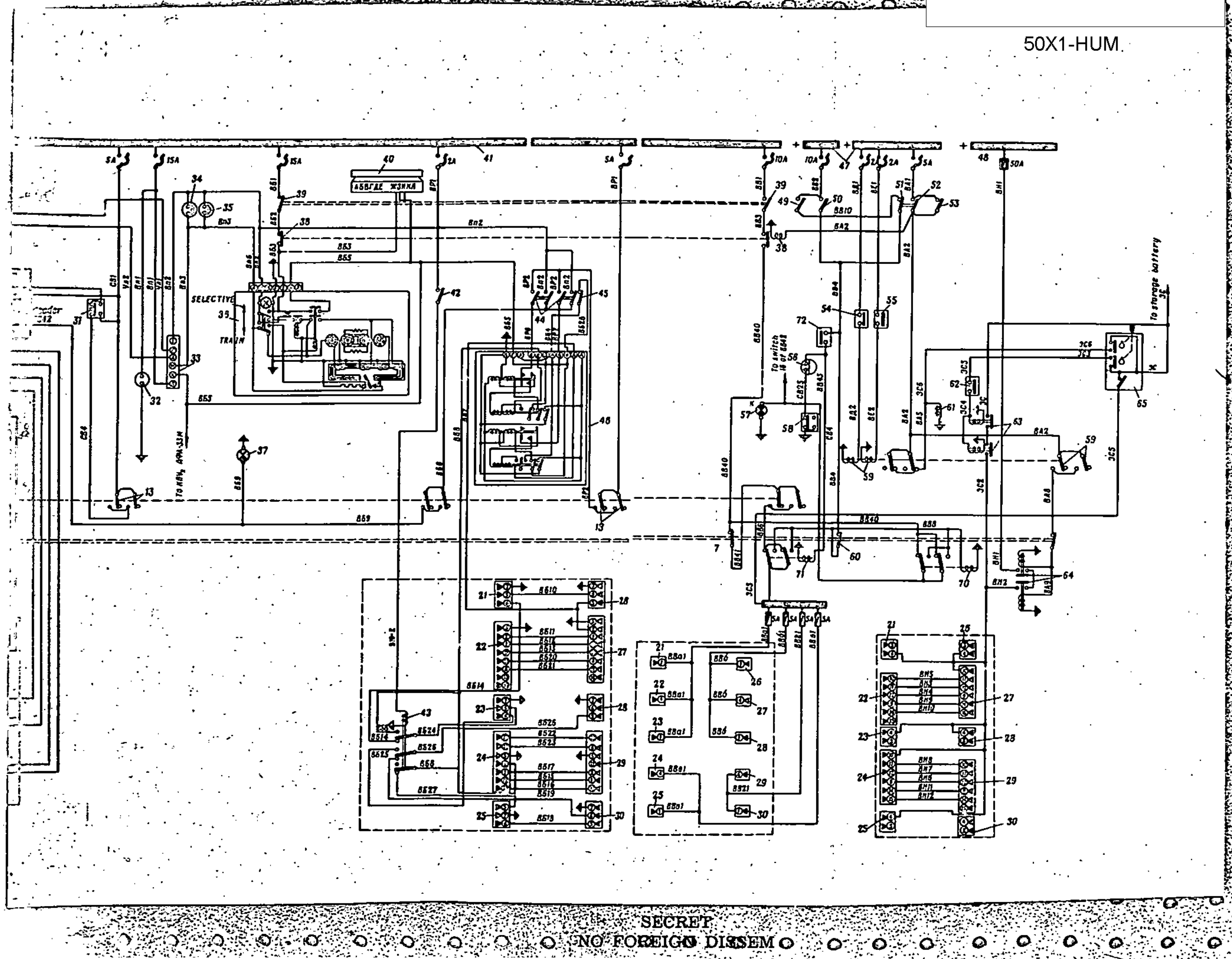

[redacted]

50X1-HUM

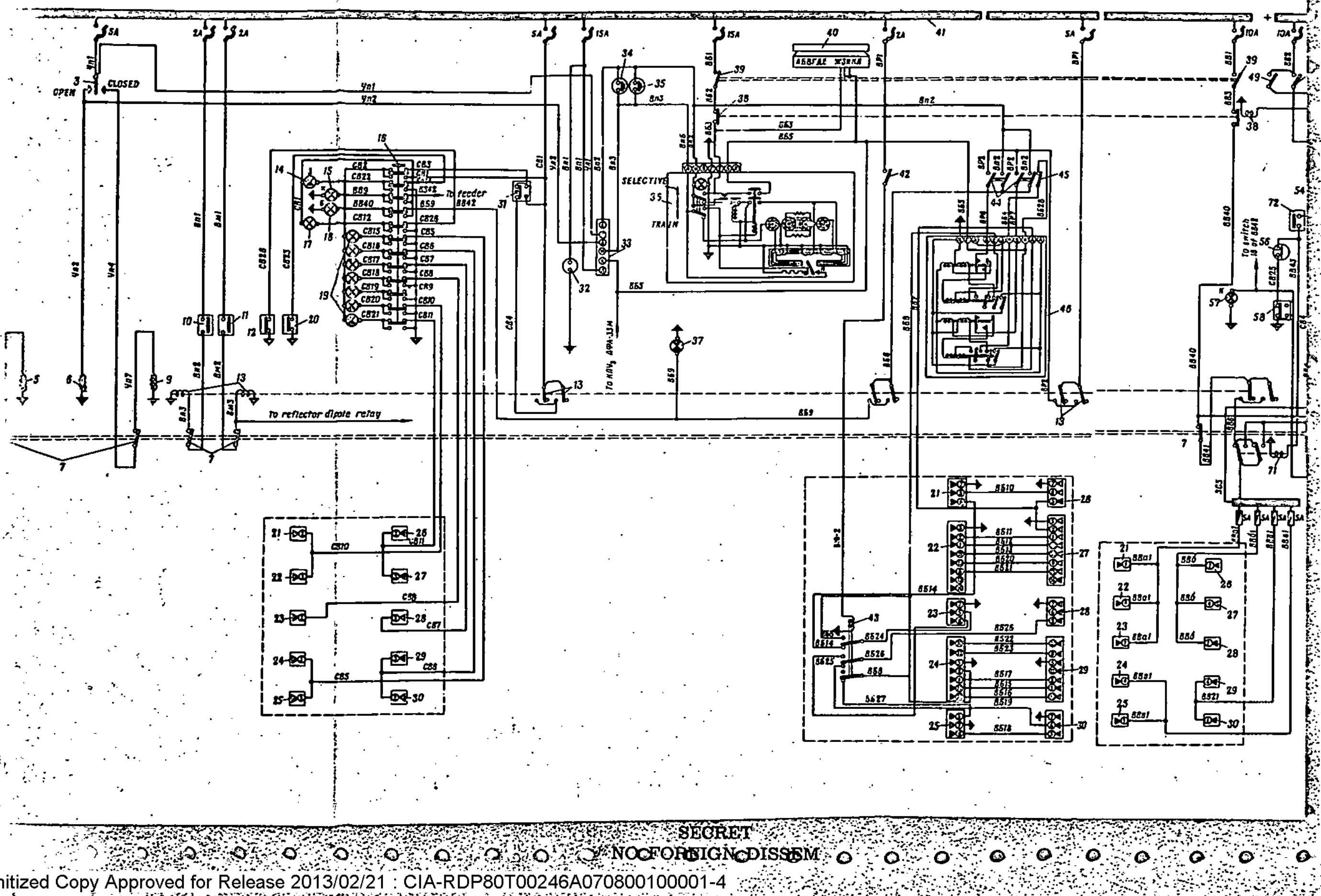

[redacted]

50X1-HUM

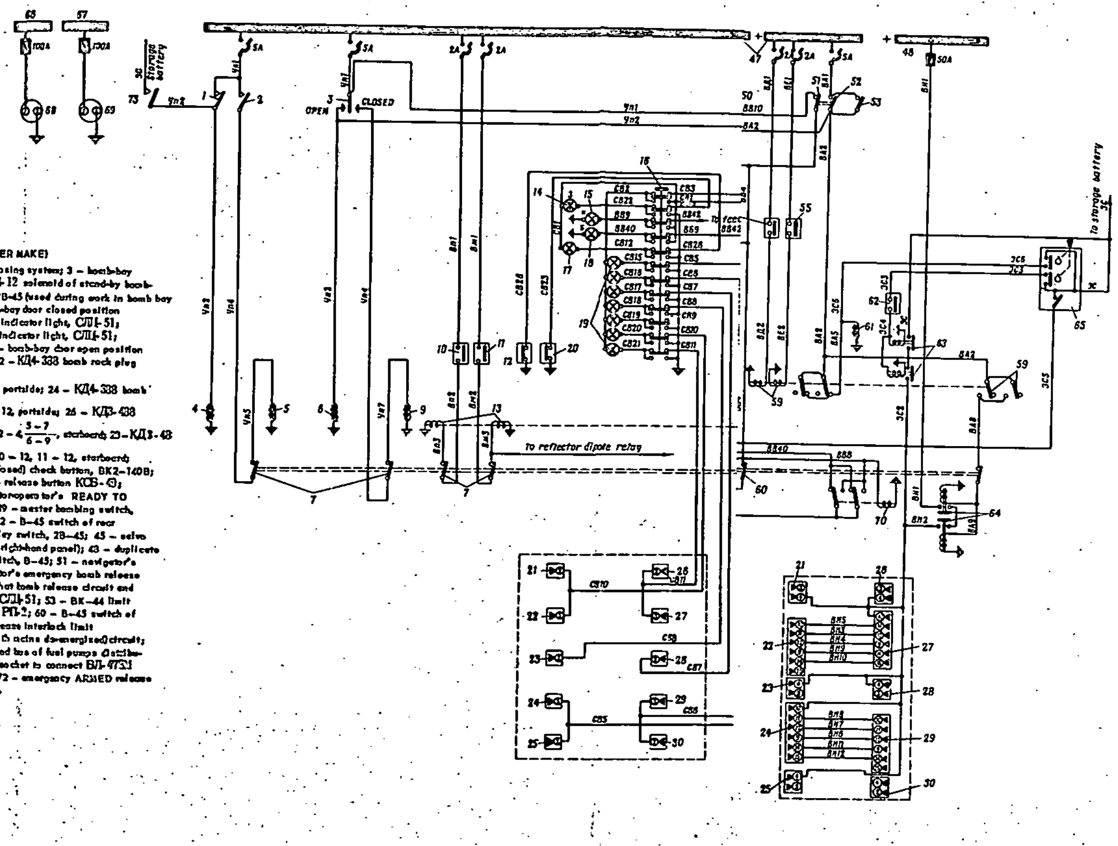

T CIRCUIT DIAGRAM (AIRCRAFT OF LATER MAKE)

– 11–43 switch of stand-by bomb-bay door closing system; 3 – bomb-bay
-by bomb-bay door opening system; 5 – ЭП-12 solenoid of stand-by bomb-
; 7 – bomb release circuit interlock switch, 2B-45 (used during work in bomb bay
release limit switch, BK2–142B; 12 – bomb-bay door closed position
relay, РП-8; 14 – bomb-bay door open position indicator light, СЛЦ-51;
switch, П-4; 17 – bomb door closed position indicator light, СЛЦ-51;
– station status indicator light, СЛЦ-51; 20 – bomb-bay door open position
g connector, assemblies $\frac{1-2}{3-4}$, portside; 22 – КД4-338 bomb rack plug

bomb rack plug connector, assemblies 6 – 8, portside; 24 – КД4-338 bomb

bomb rack plug connector, assemblies 11 – 12, portside; 26 – КДЗ-438

bomb rack plug connector, assemblies 2 – 4 $\frac{5-7}{6-9}$, starboard; 23 – КДЗ-48

bomb rack plug connector, assemblies 10 – 12, 11 – 12, starboard;
board; 31 – station status (with bomb door closed) check button, BK2–140B;
, АП-5-2Д; 34 – navigator's combat bomb release button КСБ-43;
– intervalometer, ЭСБР-43А; 37 – navigator-operator's READY TO
and ARMED feed circuit interlock system; 39 – master bombing switch,
navigator's left-hand circuit breaker panel); 42 – B–45 switch of rear
cutout relay, РП-3; 44 – rack selective relay switch, 2B–45; 45 – salvo
feed bus (navigator's circuit breaker right-hand panel); 43 – duplicate
; 50 – pilot's emergency ARMED release switch, B–45; 51 – navigator's
bomb release switch, B–43; 53 – navigator's emergency bomb release
; 55 – KOC–45 dome lamp indicating that bomb release circuit and
– pilot's ARMED release indicator light, СЛЦ-51; 58 – BK–44 limit
– emergency bomb release control relay, РП-2; 60 – B–43 switch of
bomb door opening ЗПС-1; 62 – bomb release interlock limit
relay of emergency bomb release (with mains de-energized) circuit;
panel (with mains de-energized). 65 – feed bus of fuel pumps distribu-
on frame No. 47; 68, 69 – plug connector socket to connect ВЛ-47Б1
of ЦСН-43 cruising mechanism feed line; 72 – emergency ARMED release
of bomb door opening with mains de-energized.

[redacted]

50X1-HUM

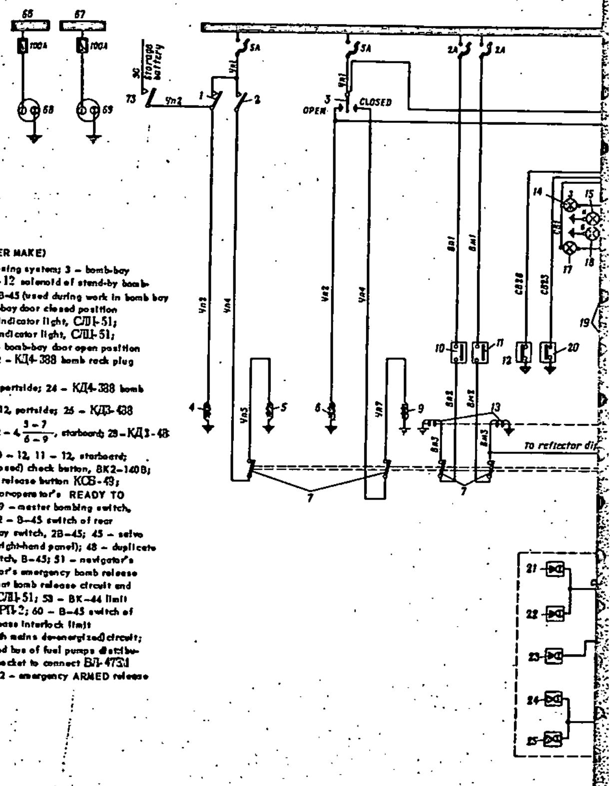

FIG. 68. BOMBING EQUIPMENT CIRCUIT DIAGRAM (AIRCRAFT OF LATER MAKE)

1 – BH–45 switch of stand-by bomb-bay door opening system; 2 – BH–45 switch of stand-by bomb-bay door closing system; 3 – bomb-bay door operation control switch, ПН-45; 4 – ЗЛС-1 solenoid of stand-by bomb-bay door opening system; 5 – ЭМ-12 solenoid of stand-by bomb-bay door closing system; 6 – bomb door opening solenoid, ЭМ-12; 7 – bomb release circuit interlock switch, 2B-45 (used during work in bomb bay 9 – bomb-bay door closing solenoid, ЭМ-12; 10, 11 – combat bomb release limit switch, BK2–142B; 12 – bomb-bay door closed position indication limit switch; BK2–142B; 13 – combat bomb release relay, РП-6; 14 – bomb-bay door open position indicator light, СЛЦ-51; 15 – ARMED release indicator light, СЛЦ-51; 16 – pocket-type switch, П-4; 17 – bomb door closed position indicator light, СЛЦ-51; 18 – navigator's READY TO DROP indicator light, СЛЦ-51; 19 – station status indicator light, СЛЦ-51; 20 – bomb-bay door open position indication limit switch, BK2–142B; 21 – КДЗ-488 bomb rack plug connector, assemblies $\frac{1-2}{3-4}$, portside; 22 – КД4-388 bomb rack plug connector, assemblies 2 – 4, $\frac{5-7}{6-9}$, portside; 23 – КДЗ-488 bomb rack plug connector, assemblies 6 – 8, portside; 24 – КД4-388 bomb rack plug connector, assemblies 10 – 12, portside; 25 – КДЗ-488 bomb rack plug connector, assemblies 11 – 12, portside; 26 – КДЗ-488 bomb rack plug connector, assemblies $\frac{1-2}{3-4}$, starboard; 27 – КД4-388 bomb rack plug connector, assemblies 2 – 4 $\frac{5-7}{6-9}$, starboard; 28 – КДЗ-48 bomb rack plug connector, assemblies 6 – 8, starboard; 29 – КД4-388 bomb rack plug connector, assemblies 10 – 12, 11 – 12, starboard; 30 – КДЗ-488 bomb rack plug connector, assemblies 11 – 12, starboard; 31 – station status (with bomb door closed) check button, BK2–140B; 32 – bombsight power supply receptacle, 43к; 33 – course stabilizer, АП-5-2М; 34 – navigator's combat bomb release button КСБ-49; 35 – navigator-operator's combat bomb release button, КСБ-49; 36 – intervalometer, ЭСБР-49А; 37 – navigator-operator's READY TO DROP indicator light, СЛЦ-51; 38 – PT–40 relay of intervalometer and ARMED feed circuit interlock system; 39 – master bombing switch, 2B–45; 40 – spark extinguisher, ИУ-50; 41 – duplicate feed bus (navigator's left-hand circuit breaker panel); 42 – B–45 switch of rear КДЗ-488 bomb rack cut-out relay; 43 – КДЗ-488 rear row bomb rack cut-out relay, РП-3; 44 – rack selector relay switch, 2B–45; 45 – salvo switch, B–45; 46 – bomb release variation box, КВСБ-48; 47 – duplicate feed bus (navigator's circuit breaker right-hand panel); 48 – duplicate feed bus; 49 – navigator's emergency ARMED release switch, B–45; 50 – pilot's emergency ARMED release switch, B–45; 51 – navigator's ARMED release circuit interlock switch, B–43; 52 – pilot's emergency bomb release switch, B–45; 53 – navigator's emergency bomb release switch, B–45; 54, 55 – emergency bomb release limit switch, BK2–142B; 56 – KOC–45 dome lamp indicating that bomb release circuit and bomb-bay door closing system are blocked (for work in bomb bay); 57 – pilot's ARMED release indicator light, СЛЦ-51; 58 – BK–44 limit switch of dome lamp indicating that bomb release circuit is blocked; 59 – emergency bomb release control relay, РП-2; 60 – B–45 switch of indication circuit interlocking (for work in bomb bay); 61 – emergency bomb door opening ЗЛС-1; 62 – bomb release interlock limit switch, BK2–142B (with mains de-energized); 63 – emergency bomb К-50Д relay of emergency bomb release (with mains de-energized) circuit; 64 – emergency bomb release relay, К-50Д; 65 – bomb release control panel (with mains de-energized). 66 – feed bus of fuel pumps distribution box on frame No. 33; 67 – feed bus of fuel pumps distribution box on frame No. 49; 68, 69 – plug connector socket to connect БЛ-47ЗИ hoist; 70 – ARMED release indication relay, РП-2; 71 – РП-2 relay of MBH–43 arming mechanism feed line; 72 – emergency ARMED release limit switch, BK2–142B; 73 – B–45 switch of bomb door opening with mains de-energized.

50X1-HUM

SECRET
NO FOREIGN DISSEM

[redacted]

FUEL CONSUMPTION CONTROL UNITS
AND
TU–16 AIRCRAFT ENGINE INSTRUMENTS

GROUP 1
Excluded from automatic
downgrading and
declassification

SECRET
NO FOREIGN DISSEM

NO FOREIGN DISSEM

[redacted]

50X1-HUM

FUEL CONSUMPTION CONTROL UNITS
AND
Ty-16 AIRCRAFT ENGINE INSTRUMENTS

S-E-C-R-E-T
NO FOREIGN DISSEM

S-E-C-R-E-T
NO FOREIGN DISSEM

[redacted]

50X1-HUM

CONTENTS

The book contains 72 pages. 6 inserts and 78 figures on 28 sheets are appended to the book.

S-E-C-R-E-T
NO FOREIGN DISSEM

[redacted]

50X1-HUM

CHAPTER I

GENERAL INFORMATION ON FUEL SYSTEM OF ТУ-16 AIRCRAFT

1. ENGINE FUEL SUPPLY SYSTEM

The РД-3М engines on the ТУ-16 aircraft operate on fuel Т-1, State Standard ГОСТ No.4138-49, or ТС-1, State Standard ГОСТ No.7149-54. Fuels Т-1 and ТС-1 may be blended in any proportion.

The entire amount of fuel on the aircraft is held in 27 rubber tanks, comprising 10 groups, each engine being served by 5 tank groups. Should it be necessary, fuel may be delivered to any of the two engines from any tank group.

Grouping of the tanks and respective capacity values are given in Table 1.

Table 1.

Tank grouping and capacity values

Group No.	Left engine			Right engine		
	Tank No.	Service tank No.	Tank group capacity, lit.	Tank No.	Service tank No.	Tank group capacity, lit.
I	1 and 2	2	6250	5	5	6350
II	4	4	3300	3	3	3150
III	7-11 (left)	10	9850 (right)	7-11	10	9850
IV	12-16 (left)	16	3050	12-16 (right)	16	3050
V	6 (left)	6	2700	6 (right)	6	2700

Arrangement of the fuel tanks and capacitance-type fuel gauge set СЭТС-60М on the aircraft is shown in Fig.1. Tanks No. 7 - 16 are accommodated in the wings. The remaining tanks are located in the fuselage.

Each of the service tanks of the respective groups is furnished with booster pump ЭЦН-Т driven by electric motor МЭ-630Т. Tanks No.2 and 5 are furnished with two booster pumps each, which provides for more reliable operation. By reference to Table 1, it will be seen that tanks No.2 and No.5 are the largest ones. Besides, these tanks are located at a greater distance from the aircraft centre of gravity than the other tanks. Therefore, if the booster pump located in one

[redacted]

50X1-HUM

of these tanks fails, no fuel will be drawn from the tank which is likely to cause displacement of the centre of gravity. To avoid this tanks No.2 and No.6 are furnished with two pumps each; the pumps run in parallel at the same rating.

The fuel from the tanks is delivered to the engines along the pipe lines under a pressure built up by the booster pumps (Fig.2).

Installed in the pipe lines between the tank groups are non-return valves, preventing fuel transfer from one tank group to another. The pipe lines from all five tank groups (for each engine) run to common fuel lines. The following equipment is installed in both of the common fuel lines:

(a) one main dump valve 5; the valve is used for discharging fuel from all five tank groups of the given side;

(b) one fuel shut-off valve 6 with electric mechanism МЗК-2; fuel from the shut-off valves is delivered to low-pressure pumps 7 (unit 453 or ЦН-1А), mounted on the engines, and further, via transmitters 8 of fuel flow meters PTC-16, fuel-cooled oil coolers 9 (unit 52) and filter 10 to engine high-pressure plunger pumps ЦН-29-15.

The fuel shut-off valve (Fig.3) is of a valve type. It serves for cutting off the pipe line carrying fuel to the engine and may have, two positions: OPEN (ОТКРЫТО) and CLOSED (ЗАКРЫТО). With the aircraft positioned on the parking ground, the fuel shut-off valve should be closed.

Remote control of the fuel shut-off valve is accomplished by the use of electric mechanism МЗК-2.

A cross-feed valve (Fig.4) is provided for connection of the two main fuel systems (for the left and right engines). It is designed for feeding fuel from any tank group to each of the engines. By manipulating the valve it is possible to deliver fuel from any group of the right engine to the left engine, and vice versa. The valve may be set in two positions: OPEN (ОТКРЫТО) and CLOSED (ЗАКРЫТО). The valve is controlled by means of electric mechanism МЗК-2.

The cross-feed valve may be open in the following cases:

(a) when one of the engines stops; in this case fuel from the identical tank groups will be used by the running engine, which provides for preserving the aircraft balance;

(b) when part of the fuel amount is lost (for instance, because of damage to one of the tank groups) or when there is a great difference between fuel amount held in the identical tank groups of the left and right engines; in this case the excess fuel is delivered to both engines; as soon as the proper balance in fuel distribution is obtained, the cross-feed valve is closed.

The switches for control of the fuel shut-off and cross-feed valves are mounted on the fuel supply panel. The open position of the fuel shut-off valves is indicated by green pilot lamps mounted on the same panel.

2. FUEL JETTISON SYSTEM

Provision has been made on the aircraft for jettisonning fuel from the first, third, and fourth tank groups. Fuel jettisoning is resorted to in the following cases:

- for unloading the aircraft prior to forced landing;
- for eliminating bank when landing with one of the wing tank groups still holding large amount of fuel.

The fuel jettison system incorporates the following equipment (Fig.5):

(a) two main fuel jettison valves (cocks) 15 with telescopic connections, installed in tanks No.16: these valves are accessible through panels, located on the lower surface of the wing and fitted with pneumatic locks;

(b) two valves 14, mounted on the flange joints between tanks No.11 and No.12;

(c) two fuselage fuel jettison valves 9 and 12, mounted on frame No.26 (below) and at frame No.49 (over the beam on the right);

(d) pneumatic switch 8, installed on the fuselage port side, at frame No.21;

(e) valve 7 for control of fuel jettison. It is mounted on captain control panel 6.

Control of the fuel jettison system is accomplished with the aid of compressed air pressurised to 60 kg/sq.cm. When valve 7 is open, compressed air is delivered simultaneously to the pneumatic mechanisms of the four wing (14, 15) and two fuselage (9, 12) fuel jettison valves, to pneumatic switch 8 and to the locks of the panels located on the lower surface of the wing, below the fuel jettison valves. Fuel jettison from the wing tanks (from the third and fourth groups) is accomplished by gravity via valves 15 installed in tanks No.16. Fuel from the second group tanks (tanks No.1, No.2, and No.5) is jettisoned with the help of the booster pumps via the pipe line used for filling the fuselage tanks in flight. For this purpose, the main fuel pipe line is connected by means of special piping to the line serving for aircraft refuelling in flight; the connection is done after the pumps of tank No.2 (at frame No.26) and tank No.5 (at frame No.49).

The fuselage valves for fuel jettison are mounted in the above connecting pipes and are opened as soon as the fuel jettison control valve is set in the open position. During fuel jettison, fuel is delivered by the booster pumps from tanks No.1, No.2, and No.5 to the pipe line serving for aircraft refuelling in flight, to be carried to the terminal connection located in the tip fairing of the left wing. When the fuel jettison control cock is open, compressed air is delivered to the pneumatic switch, which starts the pumps of tanks No.2 and No.5, if they have been inoperative.

It takes about 11 min. to dump 11 tons of fuel from the first tank groups. Sixteen min. are enough to empty the third and fourth tank groups (in both wings) holding 12 tons of fuel. Thus, to jettison the maximum amount of fuel equal to 23 tons, about 16 min. will be required. Rate of fuel discharge will be reduced by the end, resulting in only 1.5 t of fuel being drained within the last 5 min. This is due to a decrease in the pressure head of fuel contained in the third group tanks, as a result of which fuel will flow at a slower rate via the side valves.

During flight tests of the system it has been found that the aircraft starts rolling to the left as soon as a jet of fuel begins to issue from the left wing tip fairing hole. This causes the ailerons to impose a load of about 6 to 7 kg on the control wheel. However the load is fully balanced by the trim tab.

[redacted]

50X1-HUM

CHAPTER II

FUEL CONSUMPTION CONTROL AND FUEL QUANTITY MEASURING EQUIPMENT СЭТС-60Д (АНТ-88Д)

The capacitance-type fuel gauge of the АНТ-88Д type, modification СЭТС-60Д (or modernised set СЭТС-60М) is designed for:

(a) measuring quantity of fuel in the five tank groups (total amount) and in each of the groups separately;

(b) automatic control of sequence of fuel consumption in flight;

(c) automatic control of cocks for aircraft refuelling in flight;

(d) indicating fuel reserve remaining for 30 and 15 min.

The СЭТС-60Д set (Fig.6) includes:

Indicators	2 pieces
Measuring equipment amplifiers УТ-88	2 pieces
Fuel consumption control unit amplifiers УАТ-52-5	2 pieces
Rotary Switches ПГ-7	2 pieces
Main transmitters with signalling means	10 pieces
Additional transmitters with signalling means	5 pieces
Additional transmitters without signalling means	2 pieces

1. FUEL GAUGE MEASURING EQUIPMENT

Operating principle

Description of measuring equipment operation

The measuring equipment provides for measuring fuel quantity;

(a) in each of the tank groups feeding fuel to the pertinent engine (group measuring);

(b) in all tanks feeding fuel to the given engine (total measuring).

Each of the engines has its own equipment for measuring fuel quantity both in individual tank groups and in all tanks. The respective electric circuits of the right and left engine fuel measuring equipment are identical and are not connected to each other.

The operating principle of the measuring system in question is based on conversion of a non-electric value (changing fuel level) into an electric value (respectively varying capacitance). This conversion is effected by the use of variable capacitance transmitters. As is known, capacitance between two flat plates (Fig.7) amounts to

$$C = \frac{\varepsilon S}{d},$$

where C – is capacitance;

S – is the effective area of the plates;

ε – is the specific inductive capacitance of the medium;

d – is the distance between the plates.

The capacitance of a cylindrical capacitor (Fig.8) is determined by

$$C = \frac{2\pi\varepsilon l}{\ln\frac{R_2}{R_1}}$$

If the flat plates are placed into a vessel (Fig.9) containing fuel (kerosene), capacitance between these plates will change as compared to capacitance between the plates surrounded by air, as air and kerosene have different specific inductive capacitance values. Fuel, air and water have the following specific inductive capacitance values:

fuel, grade Т-1 – $\varepsilon = 2.04$;

fuel, grade ТС-1 – $\varepsilon = 1.92$;

air – $\varepsilon = 1$;

water (cleaned) – $\varepsilon = 82$.

Thus, capacitance value will be approximately two times as great when the interplate space is filled with fuel than when it is filled with air. Lowering of the fuel level in the vessel due to drainage will cause a corresponding reduction in the capacitance, as part of the interplate space will be filled with air.

The volume of fuel in the aircraft fuel system is proportional to fuel level in the tanks. However, the aircraft fuel tanks are of complex configuration which is dictated by structural considerations. Therefore, to ensure that changes in volume be proportional to variations in capacitance of the tubular capacitors (or to changes in the level), profiling is resorted to. For measuring the quantity of fuel in the tanks 17 variable capacitance transmitters are installed in the aircraft. The transmitters comprise a number of concentric tubes, which are profiled to ensure identical capacitance values per volume unit.

Tube profiles are calculated proceeding from the curve showing dependence of fuel volume on its level, that is

$$V = f\ (H)$$

Table 2 presents relation V = f (H). Fuel gauges СЭТС-60Д are calibrated in accordance with this table.

[redacted]

50X1-HUM

Table 2

No.	Volume, lit.	Height to transmitter flange, cm						
		I group, left	I group, right	II group, left	II group, right (tank No.3)	III group, left and right	IV group, left and right	V group, left and right
1	0	2096	2120	1525	0	1035	784	1038
2	500	1796	1880	1293	54	887	568	884
3	1000	1586	1692	1114	170	815	488	706
4	1500	1416	1536	938	288	757	410	537
5	2000	1272	1408	757	408	702	332	374
6	2500	1160	1296	563	530	648	238	188
7	3000	1052	1188	310	714	593	71	0/2860
8	3500	948	1072	0/3360	771/3055	536	0/3100	
9	4000	944	964			465		
10	4500	736	850			409		
11	5000	624	740			334		
12	5500	504	628			247		
13	6000	376	516			64		
14	6500	236	388			0/6080		
15	7000	0/7095	220					
			0/7422					

Note: Fractional numbers denote filling of tank groups up to the flange of the upper transmitter. In the case of the transmitter incorporated in tank No.3, the fractional number denotes that the tank is filled to the very top of the transmitter.

Transmitter capacitance is measured with the help of a self-balancing A.C. bridge.[1] The transmitter is connected into one of the bridge arms (Fig.10). It consists of two resistors R_1 and R_2 (9 and 12), voltage divider R_x (13) interposed between them, and two capacitances Co (7 and 11) and C_x (6) representing the capacitance of the transmitter.

One of the bridge diagonals is supplied with voltage from the secondary winding of transformer 1, whereas the other diagonal incorporates an amplifier connected between points I and II. Decreasing of the fuel level in the tank will cause changes in capacitance C_x, which will result in potential difference on bridge diagonals I and II. This potential difference is applied to the grid of the valve incorporated in the first amplification stage, comprising one half of twin triode 6H9C (3 and 10). The voltage amplified in the first stage is applied to the grid of the second amplification stage, arranged on the other half of the same valve.

The voltage amplified in the second stage is applied to the grid of third amplification stage 4, which is located on twin triode 6H7C and represents a power amplifier. The anodes of the amplifying valves are supplied with rectified current. Valve 6Ц5C(2) is employed as a rectifier. From the third stage the voltage is fed to the primary winding of output transformer 5, whose secondary winding supplies voltage to the control winding of induction-type reversing electric motor ДИД-0.5(14) accommodated in the indicator.

The electric motor starts running, thereby turning the indicator pointer to the corresponding division and actuating the slider of voltage divider 13. Turning of the slider will cause the potential difference between points I and II to decrease, approaching zero. The bridge will start to come to a balance.

As the potential difference decreases to the zero, the bridge will be balanced causing the electric motor to stop, since no signal will be fed from the bridge to the amplifier input. Electric motor ДИД-0.5 will keep the indicator pointer in this position until the capacitance of the transmitter is once again altered due to a change in the fuel level of the given tank group. This will cause the bridge balance to be disturbed again, as a result of which the above events will be repeated. Bridge balance will be restored when:

$$\frac{1}{\omega C_0}(R_1 + R'_x) = \frac{1}{\omega C_x}(R_2 + R''_x),$$

or

$$C_x = \frac{C_0(R_2 + R''_x)}{R_1 + R'_x},$$

where C_x and R_x represent variable values.

For group and total measurement of the fuel amount, each amplifier is furnished with two A.C. bridges A and Б having some common elements and actuating the same indicator motor.

The common elements of the bridges are as follows: transmitters, voltage divider 13, power amplifier, and rectifier. When fuel is measured in a group of tanks, the transmitters of the respective group are connected into the arm of bridge A, causing the indicator pointer to read the fuel quantity in this group (on the inner scale).

In this case bridge Б is disconnected from the system by the action of relay РП-6, incorporated in the amplifier.

When total amount of fuel is to be measured, the transmitters of all tank groups supplying the given engine are connected in parallel and into arm of bridge Б Now the indicator pointer will read the total amount of fuel contained in all the tank groups (on the outer scale of the indicator).

The operating principle of electric motor ДИД-05 depends on rotation of a magnetic field created by two currents of the stator windings dephased by 90°. Fig.11 illustrates the motor windings arranged at an angle of 90° relative to each other.

Currents flowing in the coil windings will create magnetic fields running perpendicular to the plane of winding turns (currents flowing in the windings and subject to sinusoidal alterations are known to cause analogous alterations in the winding magnetic fields proportional to the currents in magnitude.

---

[1] The self-balancing bridge employed for measuring transmitter capacitance is practically not affected by variations in mains voltage or in current frequency.

[redacted]

50X1-HUM

Curves A and Б represent the currents of the respective windings.

At certain moment а the direction of current flowing in winding A is positive and it is maximum in value. Winding Б at that moment is deenergized. Therefore the magnetic field will be formed by the current of winding A only. This magnetic field is represented by vector OA. At following moment б current will flow both in winding A and in winding Б, its intensity being the same in both windings and less than the maximum value. The total magnetic action of these two fields is represented by vector OВ, which equals vector OA in value.

At moment в current in winding Б will reach the maximum intensity, whereas in winding A current will be equal to zero at the same moment. The magnetic field created by the current flowing in winding Б will be represented by vector OБ which equals vectors OA and OВ in value. At moment г current flowing in winding A will reach the maximum intensity but will become negative. At this moment current in winding Б will be equal to zero. The magnetic field created by the current flowing in winding A will be represented by vector OA, which equals vectors OA, OВ and OБ in value. At moment д current will flow both in winding A and in winding Б. The total magnetic action of these two fields is represented by vector OД, which equals vectors OA, OВ, OБ and OA, in value. At moment е current in winding Б will reach the maximum value, whereas winding A will be deenergized.

The magnetic field induced by the current flowing in winding Б will be represented by vector OБ, which equals vectors OA, OВ, OБ, OA_1, and $OБ_1$ in value.

Changes taking place in the magnetic field indicate that within one period the magnetic field will turn through 360°, without altering its magnitude. The magnetic field rotates at a constant speed, which depends on the frequency of current fed to the windings.

The windings of electric motor ДИД-0.5 are supplied with 400 c.p.s. A.C. (consequently, the magnetic field turns through 360° within 1/400 sec.). To change the direction of rotation of the magnetic field, it is sufficient to alter the direction of current in one of the motor windings. The circuit diagram of motor ДИД-0.5 is presented in Fig.28 (See Ref. No.6).

The motor employs two windings: an excitation winding (terminals Е and Г) and a control winding (terminals В and Г).

The excitation winding is supplied with current shifted by 90° in phase relative to the control winding current. To accomplish a 90° shift, a 0.2 μF capacitor is connected in series with the excitation winding. This capacitor is also utilized for reducing voltage from 115 to 30 V.

Rotation of the rotor is reversed by shifting the current phase in the control winding through 180°.

Changes in capacitance of the transmitters will cause respective variations in the phase of the signal sent from the bridge to the amplifier. For instance, when the tanks are being filled with fuel, capacitance of the transmitters will be increasing, whereas fuel consumption from the tanks will result in decreasing the transmitter capacitance. The phase of the signal between points I and II will change accordingly (See Fig.10). This will cause a change in the phase of current flowing in the control winding; as a result, the direction of motor rotation will reversed.

As the indicator pointer turns in unison with the motor rotation, an increase in the transmitter capacitance will cause the pointer to travel in clockwise direction (indicating an increase in fuel amount), whereas decreasing capacitance will make pointer travel counter-clockwise (indicating a decrease in fuel amount);

Variations in the phase of the signal sent from the fuel gauge bridge can be observed with the aid of a voltmeter, connected in bridge diagonal вб (Fig.12). With the bridge assumingly balanced, the voltmeter connected between points а and б will read zero. If capacitance C_x increases (with the tanks being filled) the potential of point б will be lower than that of point а, since capacitive reactance $X_c = \frac{1}{\omega C_x}$ will be reduced. The voltmeter pointer will deflect. In case capacitance C_x decreases (with fuel being drawn from the tanks) the potential of point б will be higher than that of point а (the voltmeter pointer will deflect in the reverse direction). Thus, direction of current between points а and в will change by 180°, thereby shifting the voltage phase to the same degree.

Construction of fuel gauge units

The measuring equipment of the fuel gauge set comprises the indicator, amplifier, transmitters, and change-over switch.

The indicator serves for reading both the total amount of fuel and amount of fuel contained in the individual tank groups of the aircraft fuel system. It consists of the following main units: two-phase induction motor ДИД-0.5; rheostat R_x rated for 1000 ohms; a reduction unit with gear ratio of 1:1:500; a rheostat slide and a pointer mounted on the output shaft of the reduction unit.

The mechanical diagram of the indicator is illustrated in Fig.13.

The main components of the motor are the stator and rotor. Placed on the stator is the excitation winding and two control windings connected in series. The rotor is essentially a thin-walled aluminum sleeve possessing low inertia moment. The excitation winding is supplied with A.C. voltage of 30 V, frequency 400 c.p.s. The control windings are fed for short periods with A.C. voltage not exceeding 30 V and delivered from the secondary winding of amplifier output transformer 9 (See Fig.10).

The maximum permissible current in the control windings should not exceed 110 mA; whereas the maximum current in the excitation windings must not exceed 125 mA. Excitation winding resistance amounts to 70±7 ohms; resistance of each control winding is equal to 260±26 ohms.

Rotation of the engine rotor is transmitted to the output shaft through the medium of the reduction unit having a gear ratio of 1:500. The indicator pointer and the rheostat slide are attached to the reduction unit output shaft. The slide travelling on the rheostat serves for balancing the circuit. The range of the indicator scale amounts to 300°. The scale has two rows of notches. The outer row is designed for reading the total amount of fuel, the inner - for reading the amount of fuel in individual tank groups.

The outer scale (reading the total amount of fuel) is calibrated up to 24,000 lit. The inner scale is calibrated to read as much as 6000 lit. The indicator is illustrated in Fig.14. The indicator is not furnished with a return spring, therefore the pointer may be deflected even though the fuel supply is cut off, or the circuit is out of order. To check the circuit, provision is made in the indicator construction for a zero setting check button. The circuit is checked by pushing the button (See Ref. No.8 in Fig.28), which causes D.C. negative input to be delivered to the excitation winding of relay РП-3, accommodated in the amplifier. The relay picks up thereby cutting off the transmitters (bridge variable arm C_x) and connecting a capacitance whose magnitude equals the capacitance of the "dry" transmitters. With the button pressed, the indicator pointer should read zero; permissible error is not in excess of ± 2 per cent; after the button

[redacted]

50X1-HUM

is released, the pointer should return to the initial position. If pressing of the button does not cause the pointer to move, the circuit is either damaged or deenergized.

The indicator dimensions: dia. 80 mm, length 193 mm.

Indicator weight 350 gr.

The amplifier serves for increasing the disbalance voltage of the self-balancing bridge, and for delivery of the amplified voltage to the control windings of induction motor ДИД-0.5.

The amplifier consists of four valves (6Н9С – 2 pieces, 6Н7С, 6П3С), transformers $Тр_1$ and $Тр_2$, relays РП-5 and РП-6, four rheostats for adjustment of zero and maximum settings, button TOTAL AMOUNT CHECK-UP and button GROUP CHECK-UP.

All amplifier components are mounted on the inner and outer surfaces of the chassis, as well as on the inside of the front panel (Fig.15).

Led to the outer side of the amplifier front panel are axles of four rheostats 3 for adjustment of zero and maximum settings, button TOTAL AMOUNT CHECK-UP (4) (Fig.16), button GROUP CHECK-UP (5), three-pin plug connector ШР (6) for supply of A.C. voltage of 115 V, 400 c.p.s., and D.C. of 27 V, twelve-pin plug connector ШР (7) for connection of the amplifier to the fuel gauge circuit, and safety fuse 8 rated for 1A. The two right-hand rheostats (as viewed from the front panel side) are designed for adjustment of the zero and maximum settings, respectively, on the total amount scale, whereas the two left-hand rheostats serve for adjustment of the zero and maximum settings on the individual group scale.

Buttons TOTAL AMOUNT CHECK-UP and GROUP CHECK-UP serve for checking the reference points on the total amount and individual group scales. When one of these buttons is pressed, an additional permanent capacitance is connected in parallel with the "dry" transmitters (those of the fuel system containing no fuel). When button TOTAL AMOUNT CHECK-UP is pressed, a 6000 pF capacitor is connected in parallel with the transmitters, causing the indicator pointer to read 16,000 lit. Pressing of button GROUP CHECK-UP will cause a 2200 pF capacitor to be connected in parallel with the given tank group transmitter; as a result the indicator pointer will read 6000 lit. on the inner scale. The amplifier housing is secured to the bed plate by means of four shock absorbers 2710-29-2-4. The УУ-88 amplifier valve ratings are given in Table 3.

Table 3

УУ-88 amplifier valve ratings

Valve type	Ua_1, V	ia_1, mA	Anode dissipation rating		Ua_2, V	ia_2, mA	Anode dissipation rating		Uf_1, V	Mains voltage, V	Change-over switch handle position
			Actual, W	Specified, W			Actual, W	Specified, W			
6Н9С	75	0.9	0.067	1.1	80	0.45	0.035	1.1	6.3	115	
	85	1.0	0.085	1.1	85	0.5	0.043	1.1	6.93	126.5	Group
6Н7С	295	16.2	4.8	6.0	-	-	-	-	6.3	115	
	320	18.8	6.0	6.0	-	-	-	-	6.93	126.5	

Valve type	Ua_1, V	ia_1, mA	Anode dissipation rating		Ua_2, V	ia_2, V	Anode dissipation rating		Uf_1, V	Mains voltage, V	Change-over switch handle position
			Actual, W	Specified, W			Actual, W	Specified, W			
6П3С	300	15.0	-	-	-	-	-	-	6.3	115	
	310	20	-	-	-	-	-	-	6.93	126.5	
6Н9С	75	0.5	0.037	1.1	80	0.52	0.04	1.1	6.3	115	Total
	80	0.55	0.044	1.1	85	0.57	0.048	1.1	6.93	126.5	
6Н7С	295	15.0	4.43	6.0	-	-	-	-	6.3	115	
	330	18.0	5.95	6.0		-	-	-	6.93	126.5	

To connect the power supply negative wire, a conduit is provided on the amplifier housing.

The amplifier overall dimensions 245x178x290 mm, weight 4500 gr.

The amplifier with the bottom plate removed (bottom view) is shown in Fig.17.

Transmitters. The transmitters comprise a set of concentric profiled tubes. The number of tubes varies from 3 to 5, which provides for obtaining considerable specific capacitance, that is capacitance referred to the unit of volume.

Connection of transmitter concentric tubes is illustrated in Fig.18.

The transmitter consists of the following main parts (Figs 19 and 20): a head, a flange, profiled tubes, a signalling unit coil, a float, a guiding tube, a plug connector, and an earthing screw.

A clearance between the tubes is adjusted within 1.5 to 6 mm. To preserve a permanent clearance, the tubes are interlaid with insulating inserts, fabricated in organic glass (grade К-4).

The lower and upper sections of the transmitter are held with a grooved organic glass ring each. The ends of the transmitter tubes are fitted into the ring grooves.

The rings are fastened to the flange skirt on top and to the outer tube on bottom. Identical tubes (plates) of the transmitter are connected to each other by means of brass lobes, whereas the common ends are led via the guiding tube and the transmitter head to pins А and Б of the plug connector. The ends of the signalling unit coils are likewise led via the same guiding tube. The signalling unit coil is not connected to the measuring equipment circuit; it is incorporated in the circuit of the equipment controlling fuel consumption.

To make the transmitter water-proof at the head end, a rubber gasket is inserted between the head and the flange. Besides, the entire head inside is filled with ceresine of grade Ц-75 or Ц-83. The transmitters are connected to the fuel gauge circuit with the aid of the following five-pin plug connector:

А – common for all transmitters;

Б – connecting every group to the grid of the first valve of the measuring equipment amplifier;

В – connected to the signalling coil (filling);

Г – connected to the signalling coil (upper);

Д – connected to the signalling coil (lower).

[redacted]

The main transmitters are 50 mm in diameter, the additional ones - 45 mm.

To allow free passage of fuel into and out of the transmitter, the bottom plate of the latter is provided with ports. It will be noted that the transmitter of tank No.3 is installed with the head down. Therefore fuel enters into the transmitter through the drain hole.

Transmitter ratings are presented in Table 4.

By reference to the Table it will be seen that the capacitance of the transmitters of one group amounts to 3300pF, whereas specific capacitance is equal to 0.35pF per lit. Initial transmitter capacitance of all five groups is identical. This arrangement allows the use of one indicator (measurement being performed by one bridge). For equalising the initial capacitance of the transmitter, fixed trimmer capacitors of the KCO-9 or KCO-1 type are placed in its head. If the group incorporates the main and additional transmitters, the respective capacitances will amount to 2300pF and 1000pF. The total capacitance of the group transmitters is equal to 3300pF.

By reference to the transmitter tube connection diagram (See Fig.18) it will be seen that the outer tube (plate) is always soldered to terminal A, while the inner tube is connected to terminal Б. This type of connection is provided for all of the transmitters, exclusive of transmitters incorporated in tanks No.7 and No.12, where connection is accomplished in the reverse manner. This arrangement provides protection against interference on the part of the signalling units. The signalling unit should be located on the outer tube which is not connected to the valve grid. The transmitters of tanks No.7 and No.12 have their signalling units arranged on the inner tube, therefore the connection has been accomplished in the reverse manner.

Table 4

СЭТС-60П Transmitter Rating

No. of tank and transmitter	Name of signal	Volume read, lit.	Distance from flange surface, mm	Volume measured, lit.		Distance from flange line to transmitter end, mm	Transmitter capacitance, pF	Transmitter weight, gr
				from	to			
1	2	3	4	5	6	7	8	9
Tank No.2	Filling	6675	60					
	Lower	250	1850	10	7080	2060	3300±3%	3700
Tank No.3	Filling	7300	140					
		290	1940	15	7520	2080	3300±3%	3750
Tank No.4	Filling	3310	140					
	Upper	2700	440	30	3410	1509	3300±3%	2300
	Lower	250	1400					
Tank No.5	Filling	2920	674	380	3055	784	2300±3%	2050
Main	Upper	2320	464					
Additional	Lower	295	117	55	440	196	1000±3%	650
Tank No.7	Upper	5180	308	4177	5977	923	1000±3%	1050
Tank No.10	Lower	360	516	55	4177	618	2300±3%	1650
Tank No.12	Upper	2340	240	1820	3140	404	1000±3%	850
Tank No.16	Fuel left	600	224	10	1870	335	2300±3%	1150
Tank No.6	Fuel left	1600	298	25	2320	960	2300±3%	2150
Main Additional		-	-	2320	2890	245	1000±3%	600

Fig.21 shows attachment of the fuel gauge transmitters to the fuel tanks. Transmitter 1 is attached to tank flange 2 by means of four bolts 3.

As the transmitters installed in tanks No.2, No.4, and No.5 are rather long, their ends are fitted into special sleeves secured to the bottom plates of the tanks (Fig.22).

Switch. Rotary switch ПТ-7 (Fig.23) serves for:

(a) cutting in and out of power supply (115 V, 400 c.p.s.);

(b) successive connection of transmitters, when checking amount of fuel in individual tank groups;

(c) connection of all transmitters, when checking total amount of fuel;

(d) connection of D.C. minus (27 V) to the excitation winding of relay РП-6, when checking total amount of fuel.

Rotary switch ПТ-7 is a wafer type consisting of five sections and having 7 fixed positions: OFF (ВЫКЛЮЧЕНО) , TOTAL (СУММА), 1,2,3,4, and 5.

With the switch handle set in the OFF position, the power supply is disconnected from the circuit; when the handle is set against 1, 2, 3, 4, and 5, the transmitters of the respective tank groups are connected into the circuit.

With the handle set in the TOTAL position, all transmitters are connected in parallel for measuring the total amount of fuel in the tanks.

Switch ПТ-7 is connected to the circuit with the aid of a twelve-pin plug connector. Fig.24 diagrams the switch in the OFF position. Fig.25 diagrams the switch in the TOTAL position. Wafers II and III connect in parallel the transmitters of the tank groups, corresponding to positions 1, 2, 3, 4, and 5. The common outlead is connected to the measuring equipment amplifier via pin 11 of the plug connector. Wafers IV connect the minus of D.C. voltage of 27 V to the winding of relay РП-6, arranged in the amplifier, in other words, it feeds the negative voltage from pin 3 to the amplifier via pin 9. Wafer V connects A.C. supply (115 V, 400 c.p.s.), that is voltage delivered to pin 1 is delivered to the amplifier via pin 2. Fig.26 illustrates the diagram of the switch set in position for checking fuel in the I tank group.

Wafer I connects the transmitter of the I tank group, that is, it connects pin 4 to pin 11.

At the same time, wafers II and III disconnect the transmitters of the I tank group from other groups and from pin 11.

Wafer IV delivers D.C. from the winding of relay РП-6, that is, it disconnects pin 3 from pin 9 thereby switching the amplifier over from the total amount to the individual group check-up.

The A.C. supply circuit remains energised throughout the fuel measuring procedure.

[redacted]

50X1-HUM

When checking the amount of fuel in the II, III, IV, and V tank groups, wafer I connects the respective transmitters (in turn) to the amplifier, whereas wafers II and III cut the transmitters of the tank groups checked off the other groups.

Switches ПП-7 are installed near the indicators, on the instrument board of the right-seat pilot. The switch dimensions are as follows: diameter - 60 mm; length - 171 mm. Weight - 600 gr.

Arrangement of fuel gauge set units on aircraft

Arrangement of the fuel gauge set units on the aircraft is shown in Fig.1.

The transmitters are installed in the following tanks: No.2, No.5, No.4, No.3 (main and additional), No.7 (main), No.10 (additional), No.12 (main), No.16 (additional), No.6 (main and additional).

The first and second tank groups of the left-hand engine and the first tank group of the right-hand engine accommodate one transmitter each. Each of the remaining tank groups incorporates two transmitters (main and additional), connects in parallel, as the complex configuration of these tanks does not allow one transmitter to account for the entire amount of fuel measured.

Amplifiers УТ-88 are arranged on the right-hand rack of the navigator-radar operator. The indicators and switches are mounted on the instrument board of the right-seat pilot.

Presented in Fig.27 is the cabling and wiring diagram of the fuel gauge set, showing arrangement of individual units on the aircraft.

Main technical characteristics of fuel gauge set СЭТС-60Д

The fuel gauge set should be capable of normal functioning at altitudes of 0 to 15,000 m. over the sea level, within the ambient air temperature range of -60°C to +50°C. Calibration error of the fuel gauge set at normal operating conditions should not exceed the valves, presented in Table 5.

Table 5

Permissible calibration error of fuel gauge set at normal operating conditions

Scale point	Calibration error in per cent of indicator scale rated value
Zero	± 2.0
Other points	± 4.0

Notes: 1. The extreme point on the given scale is taken to be the rated value of the indicator scale.
2. The normal conditions involve:

(a) temperature of 20 ± 5°C;
(b) voltage of 115 V;
(c) frequency of 400 c.p.s.;
(d) relative humidity from 30 to 80 per cent;
(e) aircraft positioned in level flight line.

The fuel gauge set error at ambient air temperatures within the range of -60°C to +50°C should not exceed the values referred to in Table 6.

Table 6

Permissible error of fuel gauge set at ambient air temperatures within -60°C to +20°C

Scale point	Calibration error in per cent of indicator scale rated value	
	at -60 ±5°C	at +50 ±5°C
Zero	± 6.0	± 3.5
Other points	± 8.0	± 9.5

The fuel gauge set units should withstand vibration stresses combined with acceleration:

(a) the indicator and switch - 1.5 g within the frequency range of 40 to 80 c.p.s.;
(b) the amplifier - 2.5 g within the frequency range of 40 to 80 c.p.s.;
(c) the transmitters - 4 g within the frequency range of 40 to 80 c.p.s.

All units of the fuel gauge set should withstand 10,000 impacts at 4 g, within the frequency range of 60 to 100 impacts per min.

The fuel gauge set should function normally when supplied from the aircraft A.C. power source rated at 115 V ± 10 per cent, 400 c.p.s. $^{+5\%}_{-7\%}$, and D.C. power source rated at 27 V± 10 per cent. Additional error of the fuel gauge set due to changes in voltage of A.C. amounting to ± 10 per cent should not exceed ± 10 per cent of the scale rated value.

Additional error due to changes in frequency amounting to $^{+5\%}_{-7\%}$ should not exceed ± 1 per cent of the scale rated value.

The transmitters of the identical tanks, the indicator, amplifier and the switch are interchangeable. After one of the fuel gauge units has been replaced, readjustment of the set is allowed.

Checking fuel gauge set operation on aircraft

The key diagram of fuel gauge set СЭТС-60Д is illustrated in Fig.28.

Measuring equipment amplifiers 7 are supplied with D.C. from the dual-feed busbar via circuit breakers АЗС-2 (mounted on the respective panel of the right-seat pilot); A.C. of 115 V, 400 c.p.s. is fed to the amplifiers across 1A safety glass tube fuses (installed on the upper panel of the navigator). The amplifiers are put in operation by switches 2ПП-250, which are mounted on the instrument board of the right-seat pilot.

The checking procedure on the aircraft is performed as follows: circuit breaker АЗС-2 is turned on. Switch ПТ-7 is set in the TOTAL position, and the system is checked for proper operation after the valves have been heated up (in 2 to 3 min.). To check the circuit controlling total amount of fuel, press button 8 on the indicator housing. This should cause the indicator pointer to set against the zero point of the scale, permissible error being not in excess of ± 480 lit. Set the switch handle successively in each of the five group positions, taking care to check the circuit by pressing the indicator button whenever changing the position of the switch handle. The pointer should read zero, with permissible error not exceeding ±160 lit.

To check the 16,000 lit. setting on the total amount scale, proceed as follows: set the switch handle in the TOTAL position. When button 26 (TOTAL AMOUNT CHECK-UP) on the amplifier front panel and the indicator button are pressed, the pointer should read 16,000 lit., the permissible error not exceeding ±960 lit.

The extreme reading of the fuel gauge indicator on the individual group scale is checked in the same manner. In this case button 25 (GROUP CHECK-UP) located on the amplifier front panel should be pressed. Whenever the position of the switch handle is changed, the indicator pointer should read 6000 lit., with permissible error not exceeding ±320 lit. (readings being taken off the indicator inner scale). If the zero and 16,000 lit. settings are found to be out of adjustment, carry out readjustment required. For this, remove cover ZERO SETTINGS and turn the axles of the two right-hand rheostats, marked with TOTAL, to make the pointer set against the zero of the indicator scale, with the indicator button kept pressed. Then press button TOTAL AMOUNT CHECK-UP and manipulate the right-hand rheostats to bring the indicator pointer to the 16,000 lit. mark. Proceed with the above adjustment until the indicator pointer sets against the scale zero, with the amplifier button released and the indicator button pressed (with permissible error not exceeding ±480 lit.); with the amplifier and indicator buttons pressed, the pointer should read 16,000 lit. (with permissible error not exceeding ± 960 lit.). Adjustment of the fuel gauge against the reference settings of the indicator scale is shown in Fig.29.

Adjustment of the 0 and 6000 lit. reference settings on the individual group scale is carried out with respect to one tank group, whereas all five groups are involved in checking the above reference settings. Should it be found that one or several tank groups are out of adjustment, manipulate the two left-hand rheostats, marked with GROUP until the indicator pointer (for each of the groups) sets against the scale zero with the amplifier button released and the indicator button pressed (permissible error not exceeding ± 160 lit.); with the amplifier and indicator buttons pressed, the pointer should set against the 6000 lit. reading of the scale (with permissible error not exceeding ±320 lit.). Having adjusted the amplifier, close and seal cover ZERO SETTINGS.

2. PORTABLE FUEL GAUGE TESTER ЛПТБ-1

The portable ЛПТБ-1 unit is designed for testing capacitance fuel gauges in field conditions.

The unit provides for successive testing of the following principal elements of the fuel gauges:

(a) transmitters for capacitance (both initial and maximum, when the transmitter is submerged into fuel up to the flange);

(b) indicators for calibration error;

(c) amplifiers for proper operation;

(d) marginal amount of fuel and other signalling units for proper operation.

Tester description

Tester ЛПТБ-1 is accommodated in two cases: ЛПТБ-1Л and ЛПТБ-1К. Case ЛПТБ-1Л encloses the entire measuring equipment of the tester. Fig.30 illustrates the tester with the cover hinged off. The right wall of the tester case (Fig.31) mounts plug connectors for connection of the amplifier, the indicator and the transmitter under check; three terminals for connection of the power supply source; and safety fuses rated for 1A.

The left wall of the case (Fig.32) mounts four valves. Case ЛПТБ-1Л houses connecting bunched wires. Weight of case ЛПТБ-1Л does not exceed 14 kg; case ЛПТБ-1Л weighs 6 kg. The overall dimensions of the cases are 307x240x250 mm and 353x233x124 mm, respectively.

Description of checking circuits

Circuit for checking transmitter capacitance

Transmitter capacitance is checked with the aid of a self-balancing A.C. bridge (Fig.33) one arm of which is represented by variable capacitor box C_1, transmitter checked C (БЕАГА) being connected in parallel with the latter. Voltage between points C and Д of the bridge amounts to 30 V. The self-balancing A.C. bridge consists of two adjustable resistors R_1 and R_2, rheostat R and two capacitances C_o and $C_1 + C_x$, where C_o is the fixed capacitance and C_1+C_x is the variable capacitance. To ensure that the circuit sensitivity and the bridge characteristics remain practically constant when checking various transmitters, the magnitude of variable capacitance $C_1 + C_x$ should vary within 8000pF to 8500pF.

For this, when measuring the capacitance of transmitters C_x varying from 8500pF to 0, the magnitude of capacitances C_1 on the capacitor box should be adjusted to 0 - 800pF respectively, so that total capacitance $C_1 + C_x$ is within 8000 - 8500pF.

With the circuit arranged in this manner, the tester functions as follows: points C and Д of the bridge are supplied with voltage from the second winding of transformer.

The self-balancing bridge is so adjusted with the aid of resistors R_1 and R_2, that when capacitance C_1 is equal to 8000pF, the bridge is balanced and the voltage between points A and B amounts to zero. In this case the slide of rheostat R is in one of its extreme positions, whereas the pointer of capacitance meter ИЕ-55 will read zero.

To ensure maximum accuracy of reading, the scale of capacitance meter ИЕ-53 has a narrow measuring range (from 0 to 500pF). When the transmitter with capacitance amounting to C_x is connected into the circuit, the capacitance of the front arm increases, thereby affecting the bridge balance; as a result, some potential difference is applied to the amplifier input

[redacted]

50X1-HUM

delivered to the control winding of induction motor ДИД-0.5 whose rotor is connected to the pointer of capacitance meter ИЕ-53 and to the slide of rheostat R through the medium of the reduction gear.

The electric motor rotor displaces the slide of rheostat R towards the bridge balanced state. If connected capacitance C_x amounts to 500pF, that is $C_1 + C_x = 8500$pF, the rheostat slide R will be found in the other extreme position, whereas the pointer of capacitance meter ИЕ-53 will set against the maximum mark of the scale. In case transmitter capacitance C_x is less than 500pF but exceeds 0, the bridge will become balanced at a capacitance amounting to $C_1 + C_x$, which is more than 8000pF, but less than 8500pF. The slide of rheostat R will occupy an intermediate position, while the pointer of capacitance meter ИЕ-53 will set between the zero and the maximum marks of the scale, thereby reading value C_x. Should transmitter capacitance C_x exceed 500pF, the magnitude of capacitance C_1 must be reduced until capacitance $C_1 + C_x$ amounts to within 8000 - 8500pF. In this case the magnitude of capacitance C_x equals the difference between 8000pF and C_1 ($8000-C_1$), plus the value indicated by capacitance meter ИЕ-53. To avoid making any calculations when employing the tester, the difference between 8000pF and the actual values of capacitances C_1 is marked on the scale of variable capacitance C_x. Therefore, transmitter measured capacitance C_x is found as a sum total of the capacitances indicated on the capacitor box scale and read off the scale of capacitance meter ИЕ-53.

Circuit for checking calibration error of indicators

The circuit for checking the indicator, illustrated in Fig.34, represents a regular capacitance fuel gauge circuit employing one amplification channel.

The circuit is essentially a self-balancing bridge, comprising two resistor arms R_1, R_2, and R (R being the resistor of the indicator checked), and two capacitor arms. One capacitor arm is formed by constant capacitance C_o, the other - by variable capacitor box C_1. This box simulates the function of the transmitter incorporated in the self-balancing bridge circuit. The indicator under check is connected into the circuit in the same manner as it is connected into the fuel gauge circuit. Unbalancing of the self-balancing bridge is caused by variations in the box capacitance. The unbalancing voltage, increased by the three-stage amplifier, is delivered to the control windings of the motor accommodated in the indicator under check.

The electric motor rotor will cause the rheostat slide to move to a position, in which the bridge will become balanced. The self-balancing bridge should be so adjusted with the aid of resistors R_1 and R_2 as to cause the indicator rheostat slide to be moved to one of its extreme positions, with capacitance C_1 amounting to 3500pF; the indicator pointer in this case should set against the zero mark of the scale.

With capacitance C_1 increasing to $3500+500\cdot(A-1)$pF, where A represents the numbered divisions of the indicator under check, the indicator rheostat slide will in the other extreme position, whereas the indicator pointer will set against the maximum division of the scale.

With the capacitance amounting to some intermediate value, the slide of rheostat R will be in an intermediate position, while the indicator pointer will read some intermediate value on the scale. Thus, all of the indicator numbered divisions are checked by varying the capacitor box capacitance between 3500pF and $3500 + 500 \cdot (A-1)$ pF. To check the indicator button for proper operation,

provision is made for relay PCM-2, which disconnects capacitance C (when the button is pressed) and connects capacitance C_2 in its place. With the button pressed, the pointer of the indicator checked should set against the zero mark of the scale.

Checking amplifiers for proper functioning

The amplifier is checked with the aid of capacitor box C_1 and additional capacitance C_2, which acts as an ordinary capacitance transmitter. Apart from the dummy capacitance, the amplifier checked is connected to an indicator through the medium of the tester. The check consists in the following: after the indicator is connected, and voltage is supplied to the amplifier, the buttons are pressed on the indicator and on the front panel of the amplifier (simultaneously); the indicator pointer should set against the reference mark of the scale.

Circuit for checking signalling units

The circuit for checking the signalling units of the transmitters (Fig.35) represents a regular circuit of the fuel gauge automatic equipment employing no valves. It is essentially an A.C. bridge, the two arms of which are composed of resistors R_1, and R_2, the other two arms being comprised of induction resistors K_1 and K_2; arm K_2 is represented by the induction coil of the signalling unit checked. The automatic equipment bridge is adjusted with the aid of resistors R_1 and R_2 so that when the bottom plate of the float comes out of the signalling unit coil, the bridge is in the state of balance. As soon as the float bottom plate is drawn into the signalling unit coil, the resistance of arm K_2 increases, thereby disturbing the bridge balance. The unbalancing voltage is fed to the excitation winding of the highly sensitive relay via the selenium rectifier. The relay operates thereby cutting in the pilot lamp. As one transmitter may accommodate up to three signalling units, the checking circuit incorporates switch $П_2$ allowing successive connection of each signalling unit to the automatic equipment bridge, thereby providing for checking all the signalling units installed in the transmitter.

Tester operation

Prior to carrying out a check, set the switches in the OFF position, and connect the power supply as specified.

Checking transmitter capacitance

Check transmitter capacitance, proceeding as follows:

1. By using bunched wire marked THIRD (ТРЕТИЙ), connect the transmitter to the plug connector marked TRANSMITTER (ДАТЧИК).
2. Set switches $П_5$, $П_7$, $П_{10}$, and the shutter of switch $П_3$ in the TRANSMITTER (ДАТЧИК) position.
3. Set switch $П_3$ at a capacitance value approximating the capacitance of the transmitter checked.
4. Set switch $П_{12}$ in the ON (ВКЛЮЧЕНО) position, wait for 2 to 3 min., then measure the capacitance of the transmitter. For this, turn the handle of

[redacted]

switch П_3 until the pointer of capacitance meter indicator ИЕ-53 sets against some division of the scale. The measured capacitance amounts to the value indicated on the scale of switch П_3, plus the value read by the indicator of capacitance meter ИЕ-53.

Note: When checking a dual transmitter, first connect it to one seven-pin plug connector, then to the other.

Checking calibration error of indicators

The check should be carried out as follows:

1. Mount the transmitter checked on the retractable holder of the tester, and use bunched wires marked FIFTH (ПЯТЫЙ) to connect the transmitter to plug connector INDICATOR (УКАЗАТЕЛЬ).

2. Set switches П_5, П_7, П_{10} and the shutter of switch П_3 in the INDICATOR (УКАЗАТЕЛЬ) position.

3. Set switch П_1 : (a) in the 1 position when checking single-pointer indicators and lower instruments of two-pointer indicators; (b) in the 2 position when checking the upper instruments of two-pointer indicators;

4. Set switch П_{12} in the ON (ВКЛЮЧЕНО) position, wait for 2 to 3 min., and then proceed to adjust and check the indicator as follows:

(a) manipulate rheostat ADJUSTMENT OF INDICATOR SCALE (РЕГУЛИРОВКА ШКАЛЫ УКАЗАТЕЛЯ) to make the indicator pointer set against the zero mark of the scale when switch П_3 is set in the 1 position; with the switch set in a position corresponding to the amount of numbered divisions, including the zero division, the indicator pointer should set against the extreme numbered division of the scale;

(b) after adjustment of the zero and maximum settings of the scale, set switch П_3 in intermediate positions (successively) and read the respective indications off the indicator scale.

Note: When checking two-scale indicators, read the indications off the outer scale.

Checking amplifiers

Check the amplifiers, proceeding as follows:

1. Connect the amplifier to plug connector TO AMPLIFIER (К УСИЛИТЕЛЮ) by means of bunched wires marked SECOND (ВТОРОЙ), FOURTH (ЧЕТВЕРТЫЙ), or SIXTH (ШЕСТОЙ), SEVENTH (СЕДЬМОЙ).

2. Mount the indicator having identical calibration with the amplifier, on the retractable holder, and connect it to plug connector INDICATOR (УКАЗАТЕЛЬ) by using bunched wires marked FIFTH (ПЯТЫЙ).

3. Set the switches: П_1 - in the 4 position; П_{10} - in the AMPLIFIER (УСИЛИТЕЛЬ) position; П_4, П_6, and П_{11} - in the following positions: П_4- - in the 4 position when relating both to total amount and individual group; П_6 - in the 2 position, when relating to total amount, and in the 1 position when relating to individual group; П_{11}- in the TOTAL AMOUNT (СУММА) position, when relating to total amount, and in the OFF (ВЫКЛ.) position, when relating to individual group.

4. Set switch П_{12} in the ON (ВКЛЮЧЕНО) position, wait for 2-3 min., then proceed to checking the amplifier. For this, turn the handle of switch П_3 until the indicator pointer sets against some division of the scale.

5. Press the indicator button, which should cause the indicator pointer to travel towards the zero mark.

6. While keeping the indicator button pressed, press the amplifier button. In this case the indicator pointer should deflect towards the maximum reading of the scale.

Checking signalling units

1. Connect the transmitter to plug connector TRANSMITTER (ДАТЧИК) by means of bunched wires THIRD (ТРЕТИЙ).

2. Set the switches: П_8 - in the SIGNALLING UNIT (СИГНАЛИЗАТОР) position; П_{10} - in the TRANSMITTER (ДАТЧИК) position; П_9 - in the 1 position, when checking single-wire signalling units, and in the 2 position, when checking two-wire signalling units; П_2 - in the Б, Г, or Д positions depending on the wiring diagram.

3. Set switch П_{12} in the ON (ВКЛЮЧЕНО) position, and perform the check. For this, arrange the transmitter at an angle of 180° to its normal operating position.

With the transmitter in the normal operating position, pilot lamp TRANSMITTER SIGNALLING UNIT CHECK-UP (КОНТРОЛЬ СИГНАЛИЗАТОРОВ ДАТЧИКОВ) should keep burning, whereas with the transmitter turned through 180°, the lamp should go out. When checking the filling signalling units, the lamp should go out at the normal operating position of the transmitter, and should light up with the transmitter turned over.

Tester main technical data

1. Tester error at normal conditions should not exceed:

(a) ± 1.5 per cent of the rated value of each measuring limit within the range of from 500 to 8500pF, when checking transmitter capacitance;

(b) ± 0.5 per cent of the rated value of the capacitor box capacitance (amounting to 8000pF), when checking the indicator.

2. Tester error at the ambient air temperature of from - 40°C to + 50°C should not exceed ± 2.5 per cent of the rated value of the measuring limit, when checking transmitter capacitance; when checking the indicators, the error should not be in excess of ±0.5 per cent of the rated value of the capacitor box.

3. Additional error due to variation in the voltage of A.C. within ± 10 per cent of the rated value, and in the frequency (within ± 5 per cent) should not exceed ± 1 per cent.

3. PROCEDURE FOR DETERMINING READING ERROR OF FUEL GAUGES AND FUEL FLOW METERS ON AIRCRAFT

The reading error of the fuel gauges and fuel flow meters is determined by means of check drainage of the fuel. The procedure is as follows:

[redacted]

50X1-HUM

1. Prior to determining the reading error, fuel gauge set CSTC-60Л and fuel flow meter set PTC-16 are checked on a stand against the data indicated in the Certificate and Description.

2. Before filling the tanks with fuel, the pointer is checked both for proper zero setting and for reference mark settings on the individual group and total amount scales.

3. The aircraft is positioned in the line of flight on rigid supports (hydraulic jacks), with the fuselage axis inclined by + 4° relative to the horizon (elevation of the point at frame No.12 over the point at frame No.33 amounts to 1280 ± 10 mm).

4. The aircraft fuel system is filled to capacity (as indicated by the refuelling floats).

5. Drainage is accomplished at a rate of about 6000 lit. per hour, in 500 lit. portions, fuel being collected in calibrated containers, with the booster pumps controlled manually.

Prior to starting drainage, perform the following operations:

(a) connect devices, incorporating cut-off cocks, into the engine fuel lines aft of the transmitters of fuel flow meters PTC-16, for measuring the amount of fuel drained;

(b) turn off manual control circuit breaker AЗC-5 and stand-by pump switch 2B-45, mounted on the pilot upper electrical panel; set switch AUTOMATIC-MANUAL (АВТОМАТ-РУЧНОЕ) in the MANUAL (РУЧНОЕ) position; switch off stand-by pump circuit breaker AЗC-2 mounted on the respective panel of the right-seat pilot;

(c) switch on the power supply source;

(d) switch on inverter ПО-4500;

(e) switch on measuring equipment amplifiers УЕ-8Б and automatic equipment amplifiers УАТ-52-5;

(f) check the amplifiers and indicators for proper operation by pressing the respective buttons;

(g) set the pointers of the fuel flow meter indicators in a position corresponding to the actual amount of fuel in the tanks.

The drainage is carried out in the order of fuel consumption on the aircraft, by turning on circuit breakers AЗC-5 of the respective tank group, or by turning on stand-by pump switch 2B-45 and successive switching of stand-by pump circuit breakers AЗC-2 (when draining fuel from tank groups IV and V). The fuel is drained in 500 lit. portions, the readings being taken off the fuel gauge indicator scales (indicating both total amount of fuel and amount of fuel in individual tank groups) as well as off the fuel flow meter indicator scales. While draining the fuel, note (by the readings of the fuel gauges, fuel flow meters and the measuring instruments of the refueller) the amount of fuel at which the pilot lamps (blue ones) light up on the panel.

Having drained off the tank group, switch off the booster pumps. Enter the data obtained in a record illustrated below, to allow carrying out subsequent calculations and comparison of the actual fuel amount with the readings of the fuel gauges for estimating the error.

The permissible error values are given in Table 9.

(Form)

RECORD
OF CHECK FUEL DRAINAGE

Aircraft No. ____________ engine ____________
(left, right)

Fuel gauge set CSTC-60Л No. ________

Nos	Portions drained	Actual amount left		Fuel gauge readings		Fuel flow meter readings	Reading error		
		tank group	total	tank group	total		tank group	total	fuel flow meter readings

Signed by ____________

4. OPERATION OF FUEL GAUGES ON AIRCRAFT

1. As it has been already stated in Chapter I, the РД-3М engine can use either fuels T-1 and TC-1 or blends thereof.

Specific inductive capacitances ε for fuels T-1 and TC-1 somewhat differ (T-1 has $\varepsilon = 2.04$; TC-1 has $\varepsilon = 1.92$).

The indicator scale of fuel gauge CSTC-60Л is calibrated for fuel T-1. Therefore, when the aircraft tanks are filled with fuel TC-1, the indicator will read an amount 6 per cent less than the actual amount of fuel delivered into the tanks, as transmitter capacitance (with the fuel level unchanged) will be less, when fuel TC-1 is put into the system.

Table 7 containscorrection data for fuel gauge CSTC-60Л to be used when employing fuel TC-1. By reference to the table it will be seen that the actual amount of fuel TC-1 held by the tanks somewhat exceeds (approximately by 6 per cent) the amount read by the fuel gauge indicator.

[redacted]

50X1-HUM

Table 7

Correction data for fuel gauge СЭТС-60Д
to be used when employing fuel TC-1

Individual group scale		Total amount scale	
Amount of fuel TC-1 in group tanks	Readings of fuel gauge СЭТС-60Д	Amount of fuel TC-1 in tank groups	Readings of fuel gauge СЭТС-60Д
8000	7520	22000	20680
7500	7050	21000	19740
7000	6580	20000	18800
6500	6110	19000	17860
6000	5640	18000	16920
5500	5170	17000	15980
5000	4700	16000	15040
4500	4230	15000	14100
4000	3760	14000	13160
3500	3290	13000	12220
3000	2820	12000	11280
2500	2350	11000	10340
2000	1880	10000	9400
1500	1410	9000	8460
1000	940	8000	7520
500	470	7000	6580
		6000	5640
		5000	4700
		4000	3760
		3000	2820
		2000	1880
		1000	940

This discrepancy has been eliminated in fuel gauge sets of the СЭТС-60М type, in which zero and maximum settings are adjusted independently. With the aircraft tanks empty, the personnel employing zero adjustment rheostats is capable of setting the pointer of the СЭТС-60М fuel gauge indicator against the zero mark of the scale. Then, after the tanks are filled with the specified amount of fuel, maximum adjustment rheostats are used to set the indicator pointer against the respective division of the scale. The maximum adjustment rheostats do not affect the zero settings, which allows the fuel gauge to give correct readings after such an adjustment has been performed.

It is not possible to adjust fuel gauge set СЭТС-60Д in the above manner, as the zero and maximum marks of the scale are interconnected with respect to adjustment. Therefore, zero adjustment will be disturbed, when the indicator pointer is set against the division indicating the amount of fuel contained in the tanks.

2. The fuel gauge wiring on the aircraft has a capacitance which affects the readings of the indicator but slightly.

Due to the wiring capacitance, the readings of the fuel gauge come to be increased by 100 to 150 lit., which may be neglected. Therefore, fuel gauge set СЭТС-60Д may be checked on a stand employing wiring of any length. It will be noted, however, that fuel gauge sensitivity is inversely proportional to the length of the wiring (slight oscillations of the indicator pointer are also possible).

5. AUTOMATIC CONTROL OF FUEL CONSUMPTION

To maintain the aircraft balance within the permissible limits, provision is made for automatic control of fuel consumption. The fuel is consumed in a definite sequence, starting from tank group I.

The automatic equipment provides for:

(a) control of the fuel pump starting sequence and duty depending on the amount of fuel contained in certain tank groups;

(b) switching on pilot lamps indicating fuel remaining for 30 or 15 min. of flight.

The automatic equipment controlling fuel consumption comprises the following main units:

amplifiers УАТ-52-5 incorporated in fuel gauge set – 2 pieces;
float-type signalling units, accommodated inside fuel gauge transmitters – 16 pieces;
fuel pumps ЭЦН-Т (unit 461) – 12 pieces;
fuel pressure signalling unit СД-3ТТ – 12 pieces;
fuel pump ПН-45Т – 2 pieces;
contactor К-50Д – 14 pieces;
relay РП2– 10 pieces;
relay РП-6 – 1 piece;
resistor ПО-10-5 – 10 pieces.

The fuel consumption automatic equipment controls and signalling devices are mounted on the fuel supply panel, arranged on the aircraft cockpit ceiling between the pilot seats (Fig.36).

Operating principle. Description of automatic equipment operation

The fuel consumption automatic control equipment set includes two amplifiers connected to each other in parallel. Following below is the description of the operating principle of the fuel consumption automatic control equipment assumingly employing one amplifier, the operating principle of the automatic control equipment using two amplifiers being the same.

The sensitive elements of the automatic equipment are represented by the float-type induction signalling units, located at certain levels inside the transmitters. Arrangement of the signalling units inside the transmitters is shown in Fig.28 (Ref.Nos 31 and 32).

The signalling unit consists of the coil and the float. The coil is hermetically sealed and has an open magnetic circuit. The float is provided with an iron bottom plate, made in the form of a bushing, which serves as a closing armature of the coil. When the float comes down, the magnetic circuit closes, thereby increasing the induction resistance. The coil acts as an arm of the unbalanced bridge (Fig.37).

[redacted]

The unbalanced A.C. bridge comprises two semi-windings of transformer 1, one arm of resistor R, and signalling unit induction coil K. The automatic equipment bridge is supplied with power from the secondary winding of transformer I, whose primary winding is supplied with voltage of 115 V, 400 c.p.s., from the mains.

From the bridge diagonal voltage is fed to the grid of valve 6H7C. Placed into the anode circuit of the above valve is relay PB3.

Changing fuel level in the tanks causes the bottom plate of the float to draw into the coil field thereby changing coil full resistance 7.

The full resistance of the signalling unit coil doubles due to float lowering; this causes voltage on the grid of valve 6H7C to increase, which, in its turn, results in increasing of the anode D.C. component. Relay PB3 picks up with current amounting to 3 5 mA, thereby switching on the contactor of the respective booster pump.

Each of the fuel consumption automatic control equipment amplifiers consists of eight bridges. By reference to Fig.28, it will be seen that the outlets of the automatic control equipment amplifiers for the right and left engines are connected in parallel. This arrangement allows one amplifier to control the sequence of fuel consumption, if the other amplifier fails. The automatic equipment of the fuel gauge is energised either with D.C. (28 V) delivered via circuit breakers АЗС-5 (mounted on the circuit breaker panel of the right-seat pilot), or with A.C. (115 V) supplied via 1A safety fuse СП-1 (mounted on the navigator upper electric equipment panel).

The automatic equipment controls are arranged on the fuel supply panel.

The automatic equipment amplifiers are turned on by means of switches 2ПП-250 (See Fig.28, Ref.No.12).

When describing the operation of the automatic equipment, it will be understood that all of the tank groups are filled with fuel. Switch "Automatic-Manual" (АВТОМАТ-РУЧНОЕ) is set in the "Automatic" (АВТОМАТ) position.

As has been already stated, the fuel gauge transmitters of both engines accommodate 8 signalling units.

As to their functions, the signalling units may be subdivided into: a lower signalling unit, an upper signalling unit, and a fuel reserve signalling unit. The lower signalling unit operates when the amount of fuel left is equal to 250±150 lit., the upper one - when fuel level drops to a value given in Table 8, and the fuel reserve signalling unit operates when the amount of fuel left is sufficient for 30 or 15 min. of flight respectively.

The signalling units are arranged as follows: the lower signalling unit - in the transmitters of tanks Nos 2 and 5 (See Fig.28, Ref. No.32);

the lower and upper signalling units - in the transmitters of tank No.4;

the upper signalling unit - in the transmitters of tank No.3 (main);

the lower signalling unit - in the transmitters of tank No.3 (additional);

the upper signalling unit - in the transmitters of tanks No.7;

the lower signalling unit - in the transmitters of tanks No.10;

the upper signalling unit - in the transmitters of tanks No.12;

the 30 min. fuel reserve signalling unit - in the transmitters of tanks No.16;

the 15 min. fuel reserve signalling unit - in the transmitters of tank No.6 (main).

The fuel consumption automatic control equipment includes 12 pumps, which are capable of operating at the following three duties:

First duty - idle (stand-by); outlet pressure at zero consumption not exceeding 0.8 kg/sq.cm.

Second duty - main (rated); outlet pressure at zero consumption amounting to 1.2 kg/sq.cm.

Third duty - heavy duty; outlet pressure at zero consumption amounting to 1.4 - 1.6 kg/sq.cm.

The pumps of the I, II and III tank groups operate at the rated duty; when the fuel level drops to 250±150 lit., the pumps pass over to the heavy duty, to draw the entire amount of fuel from the tank group in question.

Table 8

Amounts of fuel delivered into tanks and signalling unit operation ranges

Tank group and No.of tank	Amount of fuel delivered	Signal for starting pump with fuel left amounting to, lit.	Signal for starting pump with fuel left amounting to, lit.	30 min. fuel reserve signal, lit.	15 min. fuel reserve signal, lit.	Refuelling in air signal
I, left tank No.2	6250	250±150				
I, right tank No.5	6350	250±150				
II, left tank No.4	3300	250±150	2450±250			
II, right tank No.3	3150	250±150	2250±250			
III, left and right tanks Nos 7-11	5850	250±150	5000±250			
IV, left and right tanks Nos 12 - 16	3050	-	2300±250	600^{+200}_{-100}		
V, left and right tanks No.6	2700	-	-	-	1600±100	

The pumps of tank groups IV and V operate at idle duty throughout the flight. When fuel level in tank group III drops to 150±150 lit., the pumps of tank group IV pass over to the main duty, to allow fuel from tank group IV to be drawn earlier than from tank group V. Fuel from tank group V is drawn with the respective pumps operating at idle duty.

When the amplifiers are switched on (See Fig.28, Ref. No.13), relay РП-6 (See Fig.28, Ref. No.27) operates thereby starting the pumps of tank group I, which will run at the rated duty (the positive voltage is fed via terminal 1 for energising contactors К-50Д). Besides, the negative voltage is delivered to the blue pilot lamp of tank group I (See Fig.28, Ref. No. 14)[1] via terminal 6.

---

[1] Ref. Nos placed in brackets refer to Fig.28.

[redacted]

50X1-HUM

As fuel is drawn from the tanks and the float reaches the coil of the lower signalling unit accommodated in transmitters Nos 2 and 5, the signalling unit sent a signal via terminal 1 to the grid of valve 6H7C. This causes the anode D.C. component to increase thereby energising first relay PB3(27), which supplies the positive voltage via terminals 2 to contactors K-50Д (36). As a result, the pumps of tank group II start running at the rated duty, whereas the pumps of group I are switched over from the rated duty to the heavy duty by connecting th resistor (39) rated for 5 ohms into the pump winding (34). The resistor is connected to the winding by the motion of relay PП-2 (38).

Simultaneously, the blue pilot lamp of group II lights up (voltage being delivered via terminals 7).

Further fuel consumption is accomplished in the following sequence.

The upper signalling units of tank groups II (transmitters of tanks No.3, main, and No.4) operate, thereby disturbing the bridge balance; this will cause the anode current to increase. Second relay PB3 will pick up and open the positi wire (via terminals 1) supplying voltage to contactors K-50Д of tank group I pumps.

The lower signalling units of tank groups II (transmitters of tanks No.4 and No.3Д) will energise third relay PB3. The relay will feed the positive pole via terminals 3 to contactors K-50Д of tank group III pumps and to relay PП-2. The pumps of the third tank groups will run at rated duty. Relay PП-2 will conne a resistor rated for 5 ohms in series with the excitation windings of the second tank group pumps. Consequently, the pumps of tank groups II will run at heavy duty. Simultaneously, the circuit of the third tank group pilot lamp gets close

The upper signalling units of tank groups III (transmitters of tanks No.7) will energise fourth relay PB3. The relay will open the circuit running from terminal 2, thereby cutting off the pumps of the tank groups II. The lower signa ling units of the third tank groups (transmitters of tanks No.10) will energise fifth relay PB3. The circuit closes at terminals 4 thereby energizing contactors K-50Д and relay PП-2. The pumps of tank groups IV will change over from the stand-by to the main duty. The pumps of tank groups III will change over from the main to the heavy duty. Simultaneously, the pilot lamp of tank groups IV wil be energized via terminals 9. The upper signalling units of tank groups IV (transmitters of tanks No.12) will operate thereby causing sixth relay PB3 to pi up. The relay will break the circuit running from terminal 3, thereby cutting of the pumps of tank groups III.

When energised, the signalling units (transmitters of tanks No.16) will cau the seventh relay to pick up thereby making its contacts close the circuit of th red pilot lamps indicating 30 min. fuel reserve (See Table 8).

The lower signalling units of tank groups V (transmitters of tanks No.16) will energise eighth relay PB3 whose contacts will close (via terminal 11) the circuit of the red pilot lamp indicating 15 min. fuel reserve.

Provision is made in the aircraft design for installing tanks No.17, No.18, and No.19 in the wings. In this case pumps ЦН-45Т are mounted on tanks No.19. These pumps are started by the upper signalling unit of the third tank group. When fourth relay PB3 picks up the positive pole is connected to terminal 5, via the closed contacts of the relay (29); this causes pump ЦН-45Т (33) to start, as a result of which fuel from tanks No.17, No.18, and No.19 will be transferre to tank group III (tank No.7). When sixth relay PB3 picks up, the circuit of the relay of pump ЦН-45Т will be closed; as a result, the relay will pick up and op the circuit running from the terminal, thereby cutting off pump ЦН-45Т.

The following features of the automatic system should be stressed:

(a) if one of the lower signalling units (both of the left and right engines) has failed to operate, the pumps of the respective tank group will continue to run, even though both of the upper signalling units of the next tank group have operated properly;

(b) if one of the upper signalling units has failed to operate, the pumps of the previous group will continue to run.

Suppose the lower signalling unit accommodated in the transmitter of tank No.2 has operated properly, whereas the lower signalling unit of tank No.5 has failed to operate so far. As a result, the signal from the transmitter of the second tank will be sent to the left amplifier, which, in its turn, will send a signal causing the starting of the next tank group II. The pumps of the first tank group will change over to the heavy duty. Now suppose the upper signalling unit incorporated in tank group II of the left engine (transmitter No.4) has operated. This will cause the left amplifier to send a signal for cutting off the pumps of the first tank group, however the pumps of the first tank group will run due to the signal sent by the right amplifier, the lower signalling unit of transmitter No.5 being inoperative. Therefore, the pumps of the first tank group will be stopped only after operation of both lower signalling units (accommodated in transmitters No.2 and No.5).

The following events will take place, if the lower signalling units accommodated in transmitters No.2 and No.5 operate properly, the upper signalling unit has operated in transmitter No.4 only, whereas that of transmitter No.3 is inoperative. In that case the pumps of tank groups I will continue to run until the upper signalling unit incorporated in transmitter No.3 operates also. This is necessary to provide for drawing fuel from the tank group, with the automatic equipment functioning. The pump operation is controlled by 12 pressure signalling units СД-3ТУ (40) installed on the aircraft. The fuel supply panel mounts 12 green lamps respectively. When the pump outlet pressure comes to exceed 0.3 kg/sq.cm., the respective pressure signalling unit СД-3ТУ operates thereby causing the green lamp to light up. The operating principle of the pressure signalling unit is based on the functional relation between fuel pressure and the deformation of the sensitive element represented by the membrane. Fuel pressure is taken up by the elastic corrugated membrane.

To reduce radio interference on the aircraft, a capacitor of the КБМ-31 type (37) is connected in parallel to the circuit of each contactor K-50Д.

Fuel jettisoning from tank groups II is accomplished with the aid of the booster pumps via the line used for filling the fuselage tanks in flight (See Chapter I).

Opening of the fuel jettison valve arranged on the left-seat pilot control panel will cause operation of the pneumatic switch (41). As a result voltage will be delivered to the winding of relay PП-2 (42), and the first tank group pumps will run at the rated duty. Thus, fuel jettison from tank groups II is effected by pumps ЭЦН-Т.

[redacted]

50X1-HUM

Manual control of fuel consumption

Provision is made in the fuel consumption automatic equipment for manual control of fuel consumption. Switch (See Fig.28, Ref.No.17)[1] has two positions AUTOMATIC-MANUAL (АВТОМАТ-РУЧНОЕ).

Manual control may be accomplished in two ways:

1) with the automatic equipment amplifiers functioning, or

2) with the automatic equipment amplifiers cut out.

With the amplifiers functioning, the pumps are started in turn with the aid of circuit breakers АЗС (18) depending on the indications of the blue pilot lamps (14).

With the amplifiers cut out, the pumps are likewise started by manipulating circuit breakers АЗС (18) depending on the indications of the fuel gauges (the circuit breakers of the next tank groups are tripped on when about 250 lit. of fuel remains in the previous tank groups).

When controlled manually, the system functions as follows: with the switch(17) set to the "MANUAL (РУЧНОЕ) position, voltage stops flowing to relay РП-6(19). The relay contacts connect wires Г315, 14,13,12,11,31 to the circuit breakers(18).

The first two circuit breakers start the pumps of the first tank group, since the first tank group of each engine accommodates two pumps; the first circuit breaker starts the pumps of the left engine first tank group, whereas the second circuit breaker starts the pumps of the right engine first tank group.

The other circuit breakers start the pumps of tank groups II, III and IV. The pumps of tank groups IV and V are changed over (prior to take-off) to stand-by duty by the switch (21) (on aircraft starting from No.5201409, only the pumps of tank group IV are changed over to stand-by duty).

When the circuit breakers of tank groups IV are switched on, the respective pumps change over from stand-by to rated duty. The pumps of tank groups V run throughout the flight at stand-by duty, therefore they are not furnished with manual control circuit breakers. When starting the engines independently on the ground (with voltage supplied from the aircraft storage battery) fuel consumption is controlled manually, which does not involve starting of inverter ПО-4500, consuming current amounting to 300A.

In case the fuel pumps are controlled manually at engine starting, with some tank groups not filled with fuel, the automatic equipment should be put in operation as follows:

1. Set the switch AUTOMATIC-MANUAL in the MANUAL (РУЧНОЕ) position.
2. Turn on the switches AUTOMATIC FUEL CONSUMPTION (АВТОМАТ. РАСХОД ТОПЛИВА).
3. Switch on the circuit breaker for manual control of the first filled tank group.
4. Start the engines.
5. Switch off the circuit breakers for manual control of the first filled tank group.
6. Switch on the circuit breakers for manual control of the last empty tank group.
7. Wait for 4 to 5 sec., then set switch AUTOMATIC-MANUAL in the AUTOMATIC (РУЧНОЕ) position.

---

[1] Figures placed in brackets denote Ref.Nos in Fig.28.

8. Switch off the manual control circuit breakers.

The above recommendations are based on the following considerations.

Electric motor МВ-690 actuating pump ЭЦН-Т may be changed over to heavy duty from the rated duty only. The motor is not to be run at the heavy duty from the very starting, as this is associated with excessive starting current (over 500 A) which will result in burning of the brushes and slip ring.

With all tanks filled, the pumps of the first tank groups start running at the rated duty. With some tanks being empty, the pumps of the previous empty tanks will start running at the heavy duty due to the operation of the empty tank lower signalling units. Therefore it is recommended to switch on the circuit breakers of the last consumed empty tank group; this will cause the pumps of the group in question to be run at the main duty. When switch AUTOMATIC-MANUAL is set in the "AUTOMATIC" (АВТОМАТ) position, the pumps of the last empty tank group will be changed over from the rated to the heavy duty.

The manual control may be used for checking the operation of all the pumps on the ground.

For use of manual control in flight, refer to Section OPERATION OF FUEL SYSTEM AUTOMATIC EQUIPMENT.

Construction of Fuel Consumption Control Equipment Units

Fuel booster pump ЭЦН-Т

Pump ЭЦН-Т is of an electric centrifugal type; it is designed to build up fuel pressure at the inlet side of the main engine pump НД1-4, and to enable the aircraft fuel system to function properly at high altitude.

Pump specifications

Designation	Unit 461
Pump drive	From electric motor МВ-690Т, mounted on common shaft with pump
Direction of rotation	Left-hand
Fluid handled	Fuel Т-1 or ТС-1
Operating duty	(a) Light (stand-by) (b) Main (rated) (c) Heavy
Permissible temperatures of ambient medium during pump operation	From +50° to - 60° C
Hydraulic resistance offered by non-operating pump, with fuel drawn through it at a rate of 10,000 lit /hr	Not over 84 mm Hg

Pump operating position .... Vertical (with motor downward) or horizontal

Dry weight of pump .... Not over 9200 gr

The booster pumps are mounted on the fuel tanks. On tanks No.2, No.3, No.5, and No.16 the pumps are arranged horizontally, on tanks No.4, No.10, and No.6 - horizontally mounted pump. vertically. Illustrated in Fig.38 is horizontally mounted pump. The electric motor is

Electric motor MB-650T is diagrammed in Fig. 39. The electric motor is furnished with two excitation windings. One of the windings is used for the light (stand-by) duty, the other for the main (rated) duty. The pump is changed over to the heavy duty by connecting series resistor ПО-10-5 rated for 5 ohms into the main duty excitation winding. This causes a rise in the electric motor speed, resulting in a pressure of 1.4 to 1.6 kg built up at the pump outlet.

Within the guaranteed service life of the pump, the electric motor is capable of running at heavy duty for 100 hours. Continuous operation at heavy duty should not exceed 1 hour, including 15 min. of operation at a flow rate of 7000lit/hr, and 45 min. at zero delivery. Electric motor MB-650T is a four-pole, shunt-wound, multispeed machine.

Rated data of electric motor MB-650T

Voltage .... 27 V± 10 per cent
Current consumed (not over):
  (a) at rated duty .... 34 A
  (b) at stand-by duty .... 19 A

Torque:
  (a) at rated duty .... 10 kg-cm
  (b) at stand-by duty .... 6 kg-cm
Speed of rotation:
  (a) at rated duty .... 6100^{+300}_{-100} r.p.m.
  (b) at stand-by duty (not less than) .... 4600 r.p.m.

The electric motor should start normally under load at the rated and stand-by duty, with the air temperature amounting to - 60°C and supply voltage to 20 V; the pumping unit of the pump should be primed with the fluid handled.

Relation of the pressure at the pump outlet from the rate of fuel consumption p = f (Q) is presented in Fig.40. The same fig. illustrates interrelation between the current consumed and the rate of fuel consumption I = f (Q).

Amplifiers YAT-52-5

The amplifier is illustrated in Fig.41.

All amplifier components are arranged on the inner and outer sides of the mounting frame, and on the inside of the front panel. The amplifier consists of the following main components: four valves 6Ж7C, eight relays PD3, transformer 1, relay PD-6, intermediate relay PD3-45, eight rheostats (rated for 3 kilohms),

eight capacitors, rated for 1μF, and nine capacitors rated for 0.2 μF. The slide axles of eight rheostats 3 are led to the outside of the front panel. Besides, the front panel carries safety fuse 4 rated for 1A, and two twelve-pin plug connectors 5, type ШР32П12НШ1 and ШР32П12НГ1 . The amplifier housing is furnished with bed plate 7 and shock absorber frame 6 mounting four shock absorbers 271049-2-6. Amplifier housing is bonded by means of wire 9. The amplifiers are installed on a special rack, at frame No.22. The amplifier dimensions: 212x172x220 mm. Weight - 4100 gr. The ratings of the valves used in amplifiers YAT-52-5 are given in Table 9.

Table 9

YAT-52-5 amplifier valve ratings

Valve type	U_{a_1}, V	Ia, mA	Anode dissipation rating		Un, V	Mains voltage, V	Note
			Actual, W	Specified for 1 period			
6Ж7C	200	6	1.2	3.0	6.3	115	YAT-52-7 amplifier valve ratings are similar
	220	6.7	1.34	3.0	6.93	126.5	to YAT-52-5 amplifier valve ratings

Fuel gauge signalling units

The signalling units represent the sensitive elements of the automatic equipment. Arrangement of the signalling unit inside the transmitter is shown in Fig.19.

The signalling unit consists of a coil and a float. The coil is hermetically sealed and has an open magnetic circuit.

The ratings of the coil are as follows:

1. Resistance R=330 - 390 ohms at 20°C.
2. Inductive resistance L=0.16 H, with the iron core out and 0.37 H, with the iron core in.

Data pertaining to signalling unit operation are given in Table 8.

Transmitters СД-3ТУ

Transmitters СД-3ТУ are essentially fuel pressure signalling units installed at the pump outlet lines. The key diagram of the pressure signalling unit is presented in Fig.42. Fuel pressure is taken up by corrugated membrane 1. Pressure changing from 0 to 0.3 kg/sq.cm. causes deflection of rigid centre boss 2, which actuates contact spring 3, thereby opening contacts 4 and 5.

The above (first) pressure range is not used. When pressure reaches 0.35 kg/sq.cm., upper contact 6 touches contact 5 causing the pilot lamp to light up. This is the second pressure range. Adjusting screws 8 and 9 serve for setting proper gap between the contacts. This gap determines the time of signalling unit operation depending on fuel pressure changes.

СД-3УУ specifications

1. Operation of pressure signalling unit depends on two fuel pressure ranges:

(a) with pressure changing from 0 to 0.3±0.5 kg/sq.cm., the pilot lamp of the first pressure range lights up (the above pressure range is not employed on the ТУ-16 aircraft);

(b) when pressure changes from 0.35±0.05 to 2 kg/sq.cm., pilot lamp of the second pressure range lights up.

2. Signalling unit is capable of operation within a temperature range of from +50 to -60°C.

3. Signalling unit pilot lamp is rated for 3W, 27V±10%.

4. Signalling unit operating errors

(a) at normal temperature .... ±0.05 kg/sq.cm.;

(b) at temperatures of from +50 to -45°C .... ±0.075 kg/sq.cm.

5. Signalling unit has been made air-tight to satisfy the following requirements:

(a) no pressure drop occurs (as read by reference pressure gauge) in inlet section of signalling unit if air pressure of 2 kg/sq.cm. is maintained for 10 min.;

(b) with pressure of 300 mm Hg delivered simultaneously into static and dynamic systems, pressure drop for 1 min. does not exceed 8 mm Hg.

6. Signalling unit withstands excess pressure of 2 kg/sq.cm. within 5 min.

Arrangement of Fuel Consumption Control Equipment on Aircraft

Arrangement of the automatic equipment amplifiers on the aircraft is shown in Fig.1. Arrangement of the fuel booster pumps and pressure signalling units СД-3УУ is illustrated in Fig.2.

Layout of all units and elements incorporated in the electric circuit of the fuel consumption automatic control equipment is shown in the respective cable and wiring diagrams (Figs 43 and 44).

Apart from the pilots upper panel (the fuel supply panel) the aircraft accommodates 6 distribution boxes and one additional distribution box for the pumps of the left engine tank group I.

The distribution boxes are arranged on the aircraft as follows: the distribution boxes of the fuel pumps - at frame No.33 (right and left); the distribution boxes of the landing gear and the relays of the fuel pumps - in the landing gear left and right compartments; the distribution boxes of the fuel pumps - at frame No.49; the distribution boxes of the fuel gauges - at frame No.22; the additional distribution box of the fuel pump of tank No.2 - at frame No.34.

The distribution boxes enclose the following equipment: contactors Е-90Д and Е-25А (for fuel transfer pump ЦН-45Т), relays РП-2 and РП-6, resistors ПО-10-5, safety fuses ПП-15 rated for 50 and 75A.

Checking Fuel Consumption Control Equipment for Proper Operation on Aircraft

The automatic equipment is checked by draining fuel from the aircraft tanks. Preparation for the check consists in the following. The pipe line is disconnected from high-pressure pump ПН-15-28 and is connected to the drain pipe fitted with a cut-off cock (the drain pipe is furnished with a 15 mm nozzle). All tank groups are filled to capacity (as governed by the refuelling floats). Fuel drainage may be accomplished with the aircraft on the parking area. In this case the aircraft should be arranged on a concrete ground, to avoid banking. Draining proper should be carried out in the following sequence:

1. Switch on the following circuit breakers mounted on the right-seat pilot panel: FUEL FLOW METERS, LEFT AND RIGHT (РАСХОДОМЕРЫ, ЛЕВ. И ПРАВ.); FUEL CONSUMPTION CONTROL (УПРАВЛЕНИЕ РАСХОДОМ ТОПЛИВА); FUEL CONSUMPTION CONTROL UNIT, LEFT AND RIGHT (АВТОМАТ РАСХОДА ТОПЛИВА ЛЕВ. И ПРАВ.); STAND-BY PUMP CONTROL (УПРАВЛЕНИЕ ДЕЖУРНЫМ НАСОСОМ); FUEL PUMP SIGNALLING SYSTEM (СИГНАЛИЗАЦИЯ ТОПЛИВНЫХ НАСОС).

2. Switch on the automatic equipment amplifiers.

3. Set switch AUTOMATIC-MANUAL (АВТОМАТ-РУЧНОЕ) in the AUTOMATIC (АВТОМАТ) position.

4. Start draining fuel from the identical tank groups of both engines at the same time. Fuel should be let out at a rate of about 6000 lit./hr. As fuel is being drained, the readings of the fuel gauges and fuel flow meters should be registered, each time the booster pumps are successively started or cut off (as indicated by the green pilot lamps). The readings of the above instrument should be also registered whenever signal are sent by the right and left amplifiers (as indicated by the blue pilot lamps). As soon as the blue pilot lamp lights up, fuel drainage should be discontinued (by closing the fuel shut-off valves). The amplifier, sending the signal, is identified by switching off the automatic equipment amplifiers alternately. Then, the fuel is drained until the other amplifier sends the signal. Data pertaining to signalling unit operation are given in Table 8 (fuel gauge reading error being neglected). Therefore, when registering the fuel gauge readings at the moment of signalling unit operation, allowance should be made for the reading error of the fuel gauge set under test. Practically, it takes 4 hours to drain the aircraft tanks of fuel.

Checking of the automatic equipment without resorting to fuel drainage is performed with the aid of tester УПА-53-60. The procedure consists in checking the operation of the amplifiers and the automatic equipment wiring. The checking procedure on the aircraft is carried out as follows:

1. Detach the aircraft plug connectors from the amplifier or the unit.

2. Connect the aircraft automatic equipment to receptacles "5" and "7" of the tester, by using aircraft plug connectors AUTOMATIC EQUIPMENT (АВТОМАТИКА) and TRANSMITTERS (ДАТЧИКИ); connect tester plug connectors "4" and "6" to receptacles AUTOMATIC EQUIPMENT and TRANSMITTERS of the amplifier or unit checked.

3. Switch on voltage supply of 115 and 27V. This should cause the lamps mounted on the tester panel and marked VOLTAGE CHECK (КОНТРОЛЬ НАПРЯЖЕНИЯ), TANK GROUP I SWITCHED ON (ВКЛ. I гр.) and BOOSTER PUMPS TANK GROUP I (НП-I гр.) to light up.

[redacted]

50X1-HUM

Simultaneously, the identical lamps mounted on the fuel supply panel should light up. The transmitter signalling units are checked for proper operation by connecting amplifier or unit plug connector TRANSMITTERS (ДАТЧИКИ) to tester receptacle No.3. If the automatic equipment fails to operate properly, adjustment should be carried out. The adjustment (of relays PB3) is accomplished with the aid of eight rheostats led to the outer panel of the amplifier (Fig.45). The adjustable signal is checked by switching on and off the pilot lamp simulating operation of the pump (booster pump ЭН).

The automatic equipment is adjusted at a voltage of 103.5 and 126.5 V. The respective relay PB3 should pick up at 103.5 V and drop out at 126.5 V.

Electric fuel gauge set СЭТС-60М

The transmitters, automatic equipment units, and switches of fuel gauge set СЭТС-60М are interchangeable with the identical elements of fuel gauge set СЭТС-60Д, no changes in the wiring system being required in that case. Interchanging of the amplifiers and indicators requires some alterations to be performed in the wiring system of fuel gauge set СЭТС-60Д, namely, two shielded wires should be installed to connect pin 7 of the amplifier plug connector to pin B of the indicator plug connector, and pin 8 of the amplifier plug connector to pin A of the indicator plug connector (See Fig.28).

Fuel gauge set СЭТС-60М includes:

1. Indicators .... 2 pieces
2. Amplifiers, type УТ-68М .... 2 pieces
3. Automatic equipment units, type БАС-52-12 .... 2 pieces
4. Wafer type rotary switches ПГ-7 .... 2 pieces
5. Transmitters with signalling units .... 15 pieces
6. Transmitters without signalling units .... 2 pieces

Fuel gauge set СЭТС-60М operates on the same principle as fuel gauge set СЭТС-60Д. The principal features differentiating set СЭТС-60М from set СЭТС-60Д are as follows:

1. The automatic equipment and refuelling amplifiers incorporate selenium rectifiers employing bridge circuits, instead of valves 6Н7С. The signal from the bridge is delivered to the excitation winding of the highly sensitive electromagnetic relay.

2. Provision is made in the measuring equipment circuit for separate adjustment of the scale zero and maximum settings. This is of great importance for proper operation of the equipment because the zero setting of the scale is not disturbed by adjustment of the scale maximum setting. When the aircraft fuel tanks are empty, the pointer is set against the zero division of the scale with the help of the adjustment rheostate. After the tanks have been filled, the pointer is set against the respective division of the scale, by using the rheostate serving for adjustment of the maximum settings. In the measuring equipment circuit of fuel gauge set СЭТС-60Д adjustment of the zero settings is dependent on adjustment of the scale zero settings.

The automatic equipment bridge key diagram is shown in Fig.46. The bridge consists of variable inductance (signalling unit coil K_1), permanent inductance K, and adjustable resistor $R=R_1 + R_2$. The bridge is energised from the secondary winding of the transformer.

When the iron core (the float bottom plate) is introduced into the signalling unit coil field, full resistance Z of signalling unit coil K_1 changes. As a result, the balance of the bridge gets disturbed, and a potential difference appears at the bridge diagonal peaks, in points A and B; this potential difference is applied via the selenium rectifier, employing a bridge circuit, to the excitation winding of highly sensitive electromagnetic relay P. The relay picks up, and its contacts connect or disconnect the power supply from the excitation winding of booster pump contactor K-50A.

The key diagram of the amplifiers of the fuel gauge automatic equipment, type СЭТС-60М, is illustrated in Fig.47. Automatic equipment unit БАС-52-12 is shown in Figs 48, 49, and 50.

By reference to Fig. 47 it will be seen that each of the automatic equipment units consists of eight bridges, a transformer and relay (РСМ-2). The refuelling automatic equipment unit comprises four bridges. The operating principle of this automatic equipment is similar to that of the amplifiers incorporated in the СЭТС-60Д fuel gauge set.

The key diagram of the self-balancing bridge is illustrated in Fig.51.

The bridge circuit is supplied with voltage from the secondary winding of transformer 1 whose primary winding receives A.C. of 115 V, 400 c.p.s. The self-balancing bridge consists of two semi-windings of transformer 1, capacitances C_o and C_x, comprising the other two arms of the bridge, C_x being the variable, and C_o - permanent capacitances of the transmitter. Voltage from the secondary winding of transformer 1 is applied to the diagonal CД of the bridge. At a certain magnitude of variable capacitance C_x, the bridge is in the balanced state, and the potential difference in points A and B of the bridge amounts to zero. As soon as the transmitter capacitance undergoes any changes due to changing of the fuel level in the tank, the balance of the bridge will be disturbed, as a result of which the potential in point B relative to point A will be changed. This potential difference will be applied to the amplifier input. Increased voltage will be delivered from the amplifier output to the control windings of electric motor ДИД-0.5, which will move the slide of the voltage divider R to a position, in which the potential difference between points A and B becomes zero again. The indicator pointer moves in unison with the slide. Separate adjustment of the zero and maximum settings is performed as follows.

The respective adjustments are carried out by employing rheostats r_1 and r_2.

At the initial magnitude of the transmitter capacitance (with the aircraft tanks empty) the bridge is so adjusted with the aid of rheostat r_1 that it becomes balanced when the slide of voltage divider R is shifted to one of the furthermost positions, and the indicator pointer is set against the zero division of the scale.

By using rheostat r_2, the bridge may be so adjusted that it will become balanced when the slide of voltage divider R will be moved to the other extreme position, whereas the indicator pointer will be set against the maximum division of the scale. Changing of resistance r_2 is offset by the changing of resistance of rheostat R. This will not affect the potential in point B, hence adjustment of the zero settings is not dependent on adjustment of the maximum settings. However, readjustment of the zero settings will impair the adjustment of the maximum settings as the potential in bridge point B will be changed.

[redacted]

50X1-HUM

The key diagram of the fuel gauge measuring equipment amplifier is shown in Fig.52.

The A.C. self-balancing bridge consists of two tapped windings of transformer I(tapping points "10-6" and "8-6"), permanent capacitance 20 or 23 (the first is used for checking the amount of fuel in a tank group, the aircraft tanks), and variable capacitance C_x of the transmitters.

Adjustment of the zero and maximum settings of the scale is accomplished with the aid of rheostats TANK GROUP ZERO 43 (НУЛЬ ГРУППЫ) and TANK GROUP MAXIMUM 45 (МАКС. ГРУППЫ) for checking amount of fuel in individual tank groups, and TOTAL AMOUNT ZERO 42 (НУЛЬ СУММЫ) and TOTAL AMOUNT MAXIMUM 44 (МАКС. СУММЫ) for checking total amount of fuel.

The purpose of the individual components of the amplifier is referred to below.

Capacitors 16, 27 and resistor 29 from the П-shaped filter for rectifying lamp 6Ц5С. Resistors 32, 34, 37, 39, and 40 are grid leaks (building up biases on the valve grids). Resistors 33, 38, and 41 are designed for reducing grid current in valves. Capacitors 46 and 27 serve for correcting the shape of the curve. Voltage divider R (rheostat) 49 serves for balancing the bridge. The function of resistor (coil) 47 is to increase the sensitivity of the equipment when checking the amount of fuel in the individual tank groups. Resistors (coils) 28 and 9 are the compensating ones, their function being to reduce the thermal error of the fuel gauge (the compensating resistor is fabricated in copper wire ПЭЛО, which is wound in bifilar manner). Capacitors 21, 25, and 26 serve as dividers, capacitor 15 serves for shifting the current phase by 90°. Capacitors 19 and 22 serve as substitutes when checking amount of fuel in individual tank groups or in all aircraft tanks.

Valve 3 is used when checking the amount of fuel in the individual tank groups, whereas valve 4 is incorporated in the circuit used for checking the total amount of fuel.

Amplifier УТ-6Б with and without the housing is illustrated in Figs 53, 54, and 55.

Brief specifications of the fuel gauge set components are given in Tables 10 and 11.

The interconnection diagram of fuel gauge set СЭТС-60М is illustrated in Fig.56.

Table 10

Brief specifications of fuel gauge set СЭТС-60М components

(See circuit diagram of fuel gauge measuring equipment, Fig.52)

Ref. No. in Fig. 52	Description	Type or mark	Rating	Quantity
1	2	3	4	5
1	Transformer(I)		—	1
2	Transformer(II)		—	1
3	Valve	6Н9С		1
4	Valve	6Н9С		1
5	Valve	6Н8С		1
6	Valve	6Ц5С		1
7	Relay	РП-6		1
8	Relay	РП-5		1
9	Coil		800 ohms (copper)	
10	Switch	КВ-6-А		1
11	Switch	КВ-6-А		1
12	Plug connector	ШР32У12НШ1		1
13	Plug connector	ШР20П3НШ1		
14	Tubular safety fuse	ПК-45-1	1 A	3
15	Capacitor	КМБГ-3-250-0.25-II-А	0.25 μF; 250 V	1
16	Capacitor	КМБГ-2-400-2-II-А	2 μF; 400 V	1
17	Capacitor	КМБГ-2-400-2-II-А	2 μF; 400 V	1
18	Capacitor	КСО-5-500-Г-3700-II	370 pF	1
19	Capacitor	КСО-5-500-Г-2200-II	2200 pF	1
20	Capacitor	КСО-5-500-Г-6200-II	6200 pF	1
21	Capacitor	КСО-5-250-Б-10000-II	10,000 pF	1
22	Capacitor	КСО-5-500-Г-6200-II	6200 pF	1
23	Capacitor	КСО-5-250-II	30,000 pF	1
24	Capacitor	КСО-5-250-II	16,000 pF	1
25	Capacitor	КСО-5-250-Б-10,000-II	10,000 pF	1
26	Capacitor	КСО-5-250-Б-10,000-II	10,000 pF	1
27	Capacitor	КМБГ-3-160-1-II-А	1 μF;160 V	1
28	Coil		450 ohms (copper)	1
29	Resistor	МЛТ-2-1 kilohms IIБ	1 kilohm	1
30	Resistor	ВС-025-1-510 kilohms II	510 kilohms	1
31	Resistor	ВС-0.5-1-62 kilohms II	62 kilohms	1
32	Resistor	ВС-0.25-1-100 kilohms	100 kilohms	1
33	Resistor	ВС-0.25-1-1.5 kilohms II	1.5 kilohms	1
34	Resistor	ВС-0.25-1-510 kilohms II	510 kilohms	1
35	Resistor	ВС-0.25-1-510 kilohms II	510 kilohms	1
36	Resistor	ВС-0.25-1-62 kilohms II	62 kilohms	1
37	Resistor	ВС-0.25-1-100 kilohms II	1000 kilohms	1
38	Resistor	ВС-0.25-1-1.5 kilohms II	1.5 kilohms	1
39	Resistor	ВС-0.25-1-510 kilohms II	510 kilohms	1
40	Resistor	ВС-0.25-1-150 kilohms II	510 kilohms	1
41	Resistor	ВС-1-1-510 kilohms II	510 kilohms	1
42	Rheostat		500 ohms, nichrome ПЭНХ 0.13	1
43	Rheostat		500 ohms, АХНХ 0.13	1

[redacted]

50X1-HUM

1	2	3	4	5
44	Rheostat		5000 ohms, nichrome ПЭНХ 0.06	1
45	Rheostat		500 ohms, nichrome ПЭНХ 0.13	1
46	Capacitor	КСО-5-250-В-II	30,000 pF	1
47	Coil		4800 ohms ПЭЛ, wire dia. 0.07 mm	1
48	Button			1
49	Rheostat		1000 ohms	1
50	Electric meter	[illegible]-0.5		1
51	Plug connector	Ш-11		1
52	Plug connector	ШР32П12НШ1		1

---

* Specifications of the transformer (I) are given under Fig.57.

** Specifications of the transformer (II) are given under Fig.58.

Table 11

Brief specifications of fuel gauge set СЭТС-60Б components

(See circuit diagram of fuel gauge automatic equipment Fig.47)

Ref.No. in Fig. 47	Description	Type or mark	Rating	Quantity
1	2	3	4	5
1	Plug connector	ШР32П12НШ1		1
2	Plug connector	ШР32П12НГ1		1
3	Transformer (III)	*		2
4	Tubular safety fuse	ПК-45-1	1A	2
5	Rheostat		3 kilohms, nichrome ПЭНХ	2
6	Rheostat		3 kilohms, nichrome ПЭНХ	2
7	Rheostat		3 kilohms, nichrome ПЭНХ	2
8	Rheostat		3 kilohms, nichrome ПЭНХ	2
9	Rheostat		3 kilohms, nichrome ПЭНХ	1
10	Rheostat		3 kilohms, nichrome ПЭНХ	1
11	Rheostat		3 kilohms, nichrome ПЭНХ	1
12	Rheostat		3 kilohms, nichrome ПЭНХ	1
13	Coil			2
14	Coil		**	2
15	Coil		**	1
16	Coil			1
17	Coil			1
18	Coil			1
19	Coil			1
20	Coil			1
21	Rectifier, selenium	BC-18-12		2
22	Rectifier, selenium	BC-18-12		2
23	Rectifier, selenium	BC-18-12		2
24	Rectifier, selenium	BC-18-12		1
25	Rectifier, selenium	BC-18-12		2
26	Rectifier, selenium	BC-18-12		1
27	Rectifier, selenium	BC-18-12		1
28	Rectifier, selenium	BC-18-12		1
29	Electromagnetic relay	—		1
30	Electromagnetic relay			1

1	2	3	4	5
31	Electromagnetic relay			2
32	Electromagnetic relay			2
33	Electromagnetic relay			2
34	Electromagnetic relay			2
35	Electromagnetic relay			1
36	Electromagnetic relay			1
37	Relay	PCM-2		1
38	Relay	PU-6		1

---

* Specifications of the transformer (III) are given under Fig.59.

** Induction coils data: material of the winding – copper of the ПЭВ mark, dia.0.11 mm; resistance 330 to 399 ohms.

*** Relay specifications: winding material – copper of the ПЭЛ mark, dia.0.15 mm. Number of turns – 9000; resistance 560 $^{+50}_{-30}$ ohms;
pick up current 3 to 3.5 mA;
drop out current 2 to 2.3 mA.

Portable Tester ПИА-53-60 for Checking Automatic Equipment of Fuel Gauge Sets СЭТС-60Д and СЭТС-60М

Portable tester ПИА-53-60 serves for checking the automatic equipments of the fuel gauges in field as well as on the aircraft. The tester allows checking of the following automatic equipment components for proper operation:

(a) the units and amplifiers of fuel consumption control automatic equipment ЯАТ-52-5 and БАС-52-12;

(b) the amplifiers and units incorporated in refuelling automatic equipment ЯАТ-52-7 and БАС-52-13;

(c) the transmitter signalling units.

The tester is enclosed in a metal case. The external view of the tester with the cover removed is illustrated in Fig.60.

Installed on the front face of the panel are: simulator knobs, pilot lamps for checking voltage, pilot lamps for checking automatic equipment operation, an indicator, switches П1 and П2

Tester basic data

1. The tester operates on A.C. of 115±10% V, 400$^{\pm7\%}$ c.p.s.
2. Permissible ambient air temperature variations from -40 to +50°C.
3. During transportation the tester is capable of withstanding the effects of overloads, at acceleration amounting to 4 g within the frequency range of from 0.5 to 5 c.p.s., the number of impact cycles being equal to 10,000.
4. The weight of the tester does not exceed 8 kg.
5. Overall dimensions of the tester – 270x230x350 mm.

Operating principle of tester used for checking bridges in automatic equipment units and amplifiers

The key diagram of tester used for checking the automatic equipment bridges is illustrated in Fig.61. The circuit comprises an A.C. bridge, whose three arm (resistors R_1 and R_2 and permanent inductance L) are arranged in the units or amplifiers under check, the fourth arm being represented by variable inductance L_1 incorporated in the tester proper.

Variable inductance L_1 is essentially a device, simulating the function of the transmitter signalling unit and consisting of an induction coil and iron core K.

The bridge is so adjusted as to allow it to be in the balanced position, when the core is removed from the coil field. As soon as the core is introduced in the coil field, the bridge balance gets disturbed and current appears in the winding of electromagnetic relay P, connected into the bridge diagonal (via the selenium rectifier) and located in the automatic equipment unit or amplifier. The relay picks up, and its contacts switch on the respective pilot lamp mounted on the front panel of the tester.

The circuit is energized either by A.C. of 115 V, 400 c.p.s., or D.C. of 27 V.

Operating principle of tester used for checking transmitter signalling units

The key diagram of tester used for checking transmitter signalling units is illustrated in Fig.62. The circuit is represented by an A.C. bridge, whose three arms (two permanent resistors R_1 and R_2 and permanent inductances L_1 and L_2, connected into the circuit in turn) are arranged in the tester proper, whereas the fourth arm, represented by variable inductance L is incorporated in the signalling unit of the transmitter checked.

Connected into one of the bridge diagonals is indicator И.

With the transmitter signalling unit in proper condition, its inductance amounts approximately to one of the inductances L_1 or L_2, arranged in the tester, and the bridge is in the balanced position. The current in the bridge diagonal amounts to zero which makes the pointer of the indicator, connected into the diagonal (via the selenium rectifier, set in the scale zone, marked with GOOD (ХОРОШО).

With the signalling unit out of order, its inductance is not equal to the permanent inductance arranged in the tester, due to which the bridge balance will be disturbed, which will cause current to appear in indicator И . This will result in deflection of the indicator moving section, hence, the instrument pointer will set in the zone marked with BAD (ПЛОХО).

The signalling unit inductance depends on whether the tank that houses the transmitter of the signalling unit checked is filled or empty, that is, whether the iron core is placed in or removed from the inductance coil field. To maintain the bridge in the state of balance, with the signalling unit in proper condition and irrespective of the position of the iron core, provision has been made in the circuit for two permanent inductances:

- with the core drawn into the induction coil L_1;
- with the core retracted from the induction coil L_2.

Depending on the position of the float of the checked transmitter signalling unit, the appropriate induction coil is connected into the bridge circuit by manipulating switch $П_1$(Fig.63).

The circuit is energised from transformer Tp, whose primary winding is supplied with A.C. of 115 V, 400 c.p.s.

Tester circuit diagram

The circuit diagram of the tester is illustrated in Fig.63. The circuit is comprised of two independent sections: the section serving for checking the automatic equipment bridges in the amplifiers and units, and the section for checking the transmitter signalling units for proper operation.

Tester circuit for checking automatic equipment bridges

The circuit consists of eight simulating devices (1 - 8) , comprising the fourth arm of the automatic equipment bridges checked. The unit or amplifier under check is connected to the tester plug connector, marked with No.1 and No.2. If the units or amplifiers are checked outside the aircraft, voltage of 115 V (400 c.p.s.) and 27 V is delivered via three terminals located on the front panel of the tester.

With the units and amplifiers checked on the aircraft, voltage of 115 V and 27 V is fed via the plug connector marked with TRANSMITTERS (ДАТЧИКИ), which is connected to the tester plug connector No.2. To the D.C. minus the tester is connected via terminal 6 of plug connector AUTOMATIC EQUIPMENT (АВТОМАТИКА), incorporated in the unit or amplifier checked, the above plug connector being connected to tester plug connector No.1. As soon as the power supply is switched on, the following pilot lamps light up on the tester panel: two pilot lamps bearing inscription VOLTAGE CHECK, 115 V and 27 V (КОНТРОЛЬ НАПРЯЖЕНИЯ 115в и 27в) and two lamps marked with ON GROUP No. (ВКЛ. No.гр.) (14) and BOOSTER PUMP, GROUP I (БН-I гр.) (9). At the same time, voltage is delivered to the winding of relay РП-2(23) and РП-3 (24). The relays pick up, thereby connecting the common end to the minus (27 V) of the pilot lamps. The voltage positive is delivered to the pilot lamps from the unit or amplifier checked via plug connector No.2 of the tester.

When the unit or amplifier of the automatic equipment controlling the refuelling procedure is connected into the circuit, no voltage will be delivered to the windings of relays РП-2 and РП-3 (terminal 6 of plug connector AUTOMATIC EQUIPMENT being not connected to the minus of the voltage delivered). In this case, the positive of the current amounting to 27 V flows to the pilot lamps directly from the aircraft mains, via contacts 1 - 2, 4 - 5, 7 - 8 of relay РП-3, as well as via contacts 1 - 2 and 4 - 5 of relay РП-2. To the power source negative the pilot lamps are connected via the unit or amplifier checked (plug connector No.1).

The bridges in the automatic equipment amplifiers and units are checked for proper functioning by the indications of the respective pilot lamp, which lights as soon as the bridge is disbalanced. The bridge is brought out of balance by

raising the needles of the simulating devices, that is by placing the iron core into the induction coil field.

The operating sequence of the pilot lamps, with the automatic equipment bridges, incorporated in the units and amplifiers disbalanced in turn, is given in Table 12.

Table 12

Operating sequence of pilot lamps, with automatic equipment bridges disbalanced in turn

Simulator designation	Operating sequence of pilot lamps	Simulator designation	Operating sequence of pilot lamps
1A	Lights up ON, GROUP II BOOSTER PUMP, GROUP II	3V	Lights up BOOSTER PUMP, GROUP IV ON, GROUP IV
2B	Goes out BOOSTER PUMP, GROUP I	4B	Goes out BOOSTER PUMP, GROUP III BOOSTER PUMP, GROUP III, ADD.
2H	Lights up ON, GROUP III	4H Fuel reserve for 30 min.	Lights up "30 min"
3B	Goes out BOOSTER PUMP, GROUP III, ADD. BOOSTER PUMP, GROUP II	5 Fuel reserve for 15 min.	Lights up "15 min"

Tester circuit for checking signalling units

The circuit of the tester for checking the transmitter signalling units for proper operation (See Fig.63) consists of transformer 25, two manganin resistors 26 and 27 (1500 ohms each), induction coil 31 with an iron core, induction coil 32, having no iron core, selenium rectifier 28, indicator 30, relays РП-2 and РП-3 (23, 24 and 33), and switches 34 and 35. Aircraft mains plug connector TRANSMITTERS is connected to the plug connector No.3 of the tester, thus, the signalling unit of the transmitter checked is connected into the bridge circuit (the signalling unit representing the fourth arm of the bridge).

The voltage amounting to 115 V is delivered via terminals 10 and 12 of the plug connector No.3 to the primary winding of the transformer and to pilot lamp VOLTAGE CHECK, 115 V; the voltage of 27 V is supplied via terminals 11 and 12. Voltage is fed at the same time to pilot lamp VOLTAGE CHECK, 27 V and to the winding of relay РП-2 (33). The relay picks up, thereby causing its contacts 2 - 3 (when switch $П_1$ is set in the TANK FILLED position) to connect into the bridge.

circuit the induction coil having no iron core; contacts 5 - 6 of the relay (with switch $Ш_1$ set in the TANK EMPTY position) will connect induction coil 31 furnished with an iron core.

With the signalling unit in proper condition, and with switch $Ш_1$ set in the TANK FILLED position, the bridge is in the balanced state, and the indicator pointer sets in the scale zone bearing inscription GOOD (ХОРОШО).

With the signalling unit out of order, its inductance will not be equal to the induction arm of the bridge, incorporated in the tester; this will cause the bridge balance to be disturbed, as a result of which current rectified by the selenium rectifier will appear in the bridge diagonal.

With switch $Ш_2$ (35) set in turn in each of the eight positions, the signalling unit will be connected into the circuit controlling fuel consumption sequence of the left and right engines, depending on which of the amplifiers is connected to the tester.

The sequence of the transmitter signalling unit checking is given in Table 13.

Table 19

Sequence of transmitter signalling unit checking

Positions of switch $Ш_2$	Left engine		Right engine		Refuelling
	Tank No.	Signalling unit designation	Tank No.	Signalling unit designation	Tank No.
1	2	1H	5	1H	2
1	4	2B	3	2B	4
3	4	2H	3 add.	2H	5
4	7	3B	7	3B	3
5	10	3H	10	3H	
6	12	4B	12	4B	
7	16	30 min.	16	30 min.	
8	6	15 min.	6	15 min.	

When checking the signalling units controlling the refuelling procedure, plug connector TRANSMITTERS of the aircraft refuelling line is connected to the connector No.3 of the tester, whereas switch $Ш_2$ is set in the first four positions.

Placed into the tester circuit are two resistors 22 and 29, whose function is to reduce the voltage.

Operation of fuel system automatic equipment

Under normal operating conditions, the aircraft automatic equipment controlling fuel consumption is used as follows:

1. Prior to take-off, the pumps of the fourth and fifth tank groups run at the stand-by duty. The above pumps are started by operating switch STAND-BY PUMPS mounted on the fuel supply panel.

On some of the Ty-16 aircraft, only the pumps of the fourth groups run at the stand-by duty when fuel is being drawn from the first, second, and third tank groups. The pumps of the fifth tank group remain inoperative at that time. As soon as the pumps of the fourth groups start running at the rated duty, the pumps of the fifth tank groups start running at the stand-by duty.

2. Switch MANUAL - AUTOMATIC is set in the AUTOMATIC position. In this case, fuel is first drawn from the first tank groups.

Sequence of automatic equipment operation in the case of manual control of the fuel pumps at engine starting, with some of the fuel tanks empty, is given in the section MANUAL CONTROL OF FUEL CONSUMPTION.

Cases are known when some of the aircraft had their fifth tank groups emptied ahead of the proper time, causing the pilot lamp, indicating 15 min. fuel reserve to light up when fuel was being consumed from the second and third tank groups.

As is known, the pumps of the fourth and fifth tank groups on some of the aircraft run at the stand-by duty during flight. As the outlet pressure from pump ЭЦН-Т at the heavy and normal ratings exceeds the outlet pressure at the stand-by rating by 0.4 - 0.6 kg/sq.cm., fuel from the fourth and fifth tank groups should not be drawn, if the fuel is being still consumed from the previous tank groups. However, in flight, premature fuel consumption from the fifth tank groups takes place on these aircraft.

The cause for the above condition is as follows:

Fuel tanks No.6 (the fifth tank group) are arranged in the fuselage above fuel tank No.3 (See Fig.1). Therefore, fuel level in these tanks is higher than the fuel level in tanks No.7 - 16, and slightly lower than in tanks No.2, No.4, and No.5. As a result, fuel from tanks No.6 will be delivered at a somewhat higher pressure due to a static fuel column resulting in a pressure increase of about 0.13 kg/sq.cm.

Apart from this, fuel from tanks No.6 has to run a shorter distance on its way to the engines, than fuel from the other tanks (See Fig.2). Therefore, hydraulic resistance involved in fuel delivery from tanks No.6 is less in comparison with the case when fuel is supplied from the other tank groups.

Thus, with the fuel consumption automatic equipment functioning properly, some additional supply of fuel from the tanks of the fifth group is experienced during the flight, though some fuel is still contained in the previous tank groups.

To preclude additional fuel supply from the fifth tank group, with fuel consumption controlled automatically, some alterations have been made in the circuit controlling starting and stopping of pumps ЭЦН-Т. These alterations are as follows:

During successive operation of the pumps of the first, second, and third groups at the rated or heavy duty, the fourth tank group runs at the stand-by duty, whereas the fifth tank group is at standstill. As soon as the respective signal causes the pumps of the third group to be switched over to the heavy duty (with about 250 lit. of fuel remaining in each of the third groups), and the pumps of the fourth group from the stand-by to the rated duty, the pumps of the fifth group start running at the stand-by duty. Thus, with the pumps of the first three groups running successively at the operating duties, the fourth tank group pumps run at the stand-by duty; when the pumps of the fourth group run at the rated duty, the pumps of the fifth group operate at the stand-by duty.

[redacted]

With the fuel consumption controlled manually, the pumps of the fifth group start running at the stand-by duty when the circuit breaker of the fourth group is switched on (this circuit breaker is switched on as soon as the blue pilot lamp of the fourth tank group lights up on the fuel supply panel).

The circuit of the fifth tank group pumps with the above alterations is illustrated in the cable and wiring diagram of the fuel consumption control units, presented in Fig.43. By reference to these diagrams, it will be seen that when the signalling unit of the third tank group operates, relay PП-2 picks up (to accomplish switching of the fourth group pumps to the rated duty); in this case negative voltage is supplied from terminal No.3 of relay PП-2 to the windings of contactors K-50A, causing the latter to start the pumps of the fifth tank groups.

It is recommended prior to flight to run the fuel booster pumps (manually) for a few seconds to check their operation and to preclude the possibility of safety fuses blowing out in flight.

Operation of fuel system automatic equipment in emergency

1. One of the engines fails during flight. To preserve the aircraft balance, open the fuel cross-feed valve, taking care to see that fuel is consumed uniformly. If at the time of engine failure the tanks of the first groups are full, see that fuel is consumed uniformly from these tank groups by watching the readings of the fuel gauges, as the fuel contained in the first tank groups strongly affects the aircraft balance. In case fuel is consumed unevenly, control fuel consumption manually. If the engine failure occurred when the tanks contained not more than 30,000 lit. of fuel, non-uniform fuel consumption will not change the aircraft balance to any considerable degree.

2. Pilot lamp lights up indicating 15-min. fuel reserve. Check amount of fuel in each of the tank groups by the readings of the fuel gauge. Normally, fuel should be contained in the fifth tank group only. If the amount of fuel available is not sufficient for performing the landing, pass to the manual control of fuel consumption and switch on the circuit breakers of all the tank groups, to draw any remaining fuel from the tanks.

3. Both of the amplifiers fail (blue pilot lamps are dead). Pass to the manual control of the fuel system.

When passing from one tank group to another, watch the readings of the fuel gauge (manipulate the switch when the fuel gauge reads 250 lit.). Switch off the circuit breakers of the previous tank groups, as soon as the green lamps go out or start flickering.

The amount of fuel remaining for 15-min. flight is read off the fuel gauge, making allowance for the reading error. For instance, the pilot lamp, indicating 15-min. fuel reserve, lights up when the fifth tank group contains 1600 lit. of fuel. However, the fuel gauge reading error may amount to ±25%, which will correspond to 400 lit. of fuel. Thus, the 15-min. fuel reserve as read by the fuel gauge, will amount to 2000 lit.

4. One of the tanks is leaky. It is necessary to pass over to the manual control system and first consume fuel from the faulty tank group. Then proceed with the fuel supply from the other tank groups in proper sequence by means of the manual control system.

5. Blue pilot lamps do not light up in proper sequence. It is necessary to pass over to the manual control system and to check fuel in the tank groups at regular intervals by the readings of the fuel gauge. For instance, if the tank of the left engine fourth group happens to be punctured in combat, when fuel is being drawn from the second tank group, blue pilot lamps of the first, second, and fourth tank groups will light up on the fuel supply panel. Fuel will be consumed from the second and fourth tank groups (green lamps of the second and fourth groups will light up). In this case it is necessary to check fuel level in the respective tank groups and pass over to the manual control. Fuel from the tanks of the right engine fourth group should be supplied to both engines via the cross-feed valve.

6. Green lamp fails to light up whereas blue lamp of the given tank group keeps burning. Check fuel consumption from the tank group in question by the readings of the fuel gauge. If the fuel is being drawn from the tank group (the indicator pointer moves to the left) go on with the automatic control of fuel consumption. In case no fuel is being drawn from the tank group in question, pass over to the manual control, by-passing the group which has failed to supply fuel to the engine.

Note: Fuel from tanks No.6 can flow to the engines in the last turn by gravity. Not all of the fuel can flow out of tanks Nos 1,2,4,5 and from the third and fourth tank groups by gravity. No fuel can be drawn from tank No.3 by gravity.

[redacted]

CHAPTER III

ENGINE INSTRUMENTS

Following are the most important factors affecting engine performance both on the ground and during flight:

- temperature conditions and engine lubrication;
- engine rotor speed;
- pressure of fuel delivered to engine fuel nozzles;
- fuel consumption.

The exhaust gases of a jet engine have a high temperature. The gases streaming through the engine exhaust unit are discharged into the atmosphere at a great velocity. The resulting reaction of the gas stream forces is transformed into the engine thrust.

The higher the temperature of the gases the greater the reaction of the gas stream forces. However, an excessively high temperature of the exhaust gases will result in failure of the turbine blades. Therefore, measuring of exhaust gas temperature is regarded as one of the most important checks.

Proper lubrication of the engine depends not only on oil pressure in the main lubricating oil line, but on the temperature of oil as well. At elevated temperatures oil viscosity decreases resulting in better lubricating property. At low temperatures oil viscosity becomes very high which prevents oil from penetrating into small clearances between the rubbing parts; in this case friction losses increase too. Oil temperature values may be also utilised for checking, to some extent, the temperature conditions of the engine. Therefore, measuring of oil temperature and pressure is also very important from the point of view of checking the engine performance.

Proper operation of the engine will prolong its service life and ensure trouble-free performance. Loads imposed on the engine during flight or when operating on the ground depend on the rotor speed. The higher the rotor r.p.m., the greater the thrust developed by the turbo-jet engine. However, if the rotor develops an excessively high speed, its components may be subjected to overloads, which are likely to cause engine failure. On the other hand, it is not economical to run the engine at a maximum speed, as this is associated with excessive fuel consumption. Therefore, measuring of the engine rotor speed is very important for checking engine operation.

The thrust developed by the engine depends on the pressure of the fuel and pressure ratio of the air, delivered into the engine combustion chambers. In turb jet engines, fuel pressure delivered to the fuel nozzles at the normal rating is tens of times greater than the fuel pressure at starting. Therefore, fuel pressu should also be checked since it represents one of the main engine characteristics.

Finally, the amount of fuel contained in the aircraft tanks is one of the most important factors, determining the time of engine operation. The time period within which the aircraft is capable of flying through the air at given flight conditions depends on the amount of fuel held by the aircraft tanks. Therefore, the amount of fuel in the tanks and the fuel consumption should be kept under constant observation during flight.

Thus, the operating conditions of the power plant (aircraft engines) on the given aircraft include the following main characteristics:

- oil pressure in the engine turbo-starter;
- speed of the engine turbo-starter rotor;
- temperature of exhaust gases in the turbo-starter exhaust pipe;
- speed of the engine rotor;
- fuel pressure upstream of the high-pressure pumps;
- fuel pressure in the primary manifold;
- inlet oil pressure delivered to the engine;
- temperature of oil supplied into the engine;
- temperature of gases in the engine exhaust unit;
- amount of fuel in the aircraft tanks and its consumption.

To determine the respective values, which should be known at any moment, with the engines operating on the ground or in the air, the aircraft is equipped with the required measuring instruments.

All the engine instruments employed on the Ту-16 aircraft may be classified into the following groups:

1. The instruments checking the operation of the turbo-starter in the course of engine starting. These include:

- pressure signalling unit СД-24А for checking oil pressure in the turbo-starter;
- thermometer ТСТ-29 for checking turbo-starter exhaust gas temperature;
- tachometer ТЭ-45 for checking turbo-starter rotor speed.

2. The instruments checking temperature conditions and the condition of engine lubricating oil. These include:

- thermometer ТВГ-11 for checking temperature of the gases effluenting from the engine exhaust unit;
- pressure gauge in the ЭМИ-3Р set for checking oil pressure at the engine inlet;
- thermometer ТУЭ-48 in the ЭМИ-3Р set for checking temperature of inlet oil.

3. The instruments, whose indications may be used for estimation of engine thrust. These include:

- pressure gauge in the 2МИ-3Р set for checking fuel pressure in the primary manifold, downstream of the high-pressure pumps;
- pressure gauge ЭДМУ-3 for checking fuel pressure upstream of the high-pressure pumps;
- tachometer ТЭ-5-2 for checking engine rotor speed.

4. The instruments for checking fuel amount and consumption. These include:

[redacted]

50X1-HUM

- fuel gauge set СЭТС-60Д or СЭТС-60М for checking total amount of fuel and amount of fuel contained in the aircraft individual tank groups;
- fuel flow meter РТС-16 for checking total amount of fuel consumed by the engine.

1. INSTRUMENTS INDICATING TEMPERATURE AND PRESSURE

Following are the instruments indicating temperature and pressure: three-pointer electric engine-gauge unit ЭМИ-3Р, electric remote-reading pressure gauge ЭДМУ-3, thermoelectric thermometer ТВГ-11, thermoelectric thermometer ТСТ-29, and pressure signalling unit СД-24А.

Three-pointer electric engine-gaugh unit ЭМИ-3Р

Purpose

Three-pointer electric engine-gauge unit ЭМИ-3Р is a combination of three instruments serving to measure:

- fuel pressure downstream of the high-pressure pumps;
- inlet oil pressure supplied to the engine;
- temperature of inlet oil.

The ЭМИ-3Р unit set includes: indicator УКЗ-3, fuel pressure gauge transmitter П-100, oil pressure transmitter П-10, and oil thermometer transmitter П-1.

The indicator accommodates three measuring elements in one common housing:

- the fuel pressure gauge with a measuring range of from 0 to 100 kg/sq.cm.;
- the oil pressure gauge with a measuring range of from 0 to 10 kg/sq.cm.;
- the oil thermometer with a measuring range of from -50 to +150°C.

Each of the elements with its transmitter forms an independent measuring circuit.

The indicator dial consists of three sectors designed for the three pointers.

The aircraft is equipped with two ЭМИ-3Р sets. The indicators are mounted on the instrument board of the right-seat pilot.

Transmitters П-100 and П-10 are installed on a special bracket, on top of the engines, transmitter П-1 being accommodated in the oil line pocket. Each of the ЭМИ-3Р sets is switched on by means of circuit breakers АЗС-2, mounted on the circuit breaker panel of the right-seat pilot.

Main technical data of ЭМИ-3Р set

1. Permissible error in ЭМИ-3Р indicator readings, when operating in conjunction with the transmitters, at normal ambient air temperature (+20±5°C) should not exceed the following values:

For dial	Dial points checked	Permissible error
Fuel pressure gauge	10; 20; 40; 60; 80; and 90	±3 kg/sq.cm.
	0 and 100	±5 kg/sq.cm.
Oil pressure gauge	2; 4; 6; and 8	±0.4 kg/sq.cm.
	0 and 10	±0.6 kg/sq.cm.
Oil thermometer	0 and 100	±6°C

2. Variations in readings:
- of pressure gauge at all dial points .... not over 3 kg/sq.cm.;
- of oil pressure at all dial points .... not over 0.4 kg/sq.cm.;
- of oil thermometer at all dial points .... not over ±4°C.

3. ЭМИ-3Р set is supplied with voltage from the aircraft D.C. mains rated for 27 V ±10%.

4. Current consumed by an indicator and its transmitters should not be more than 0.3 A.

5. Similar indicators and transmitters belonging to different sets are interchangeable.

6. Pressure gauge transmitters withstand the following pressures:
- fuel pressure gauge transmitter .... 120 kg/sq.cm.;
- oil pressure gauge transmitter .... 15 kg/sq.cm.

7. Indicator is capable of withstanding vibrational stresses amounting to 1.5 g, vibration frequency being equal to 20 – 80 c.p.s. Transmitters can withstand vibrational stresses up to 4 g, with vibration frequency amounting to 10 – 400 c.p.s.

8. Instrument is capable of functioning within the range of ambient air temperatures of from +50 to -60°C.

9. Weight of ЭМИ-3Р set .... not over 2 kg.

Operating principle of fuel pressure gauge

The fuel pressure gauge is a diaphragm-type electric remote-reading instrument, consisting of an indicator (measuring element) and a transmitter (Fig.64).

The fuel gauge indicator comprises a ratiometer of electromagnetic type with a moving magnet employed as a rotor. The magnet carries a pointer with four fixed coils K_1, K_2, K_3, and K_4, arranged at an angle of 90°. The moving magnet is accommodated inside a copper damper. Fluctuations in the moving system cause Fuco currents to appear in the damper, as a result of which the instrument pointer will be stopped.

An additional fixed magnet serves for returning the pointer in the initial position, when the power supply is cut off. Power is supplied to the circuit via the moving contact of potentiometer П, on the one hand, and via the point of ratiometer coils, on the other. Resistors R_1 and R_2 connected in series with coils K_1 and K_2 serve for adjusting the dial range and uniformity. Resistor R_3 serves for limiting the current consumed. Resistance values of the circuit elements at a normal temperature are given in Table 14.

Table 14

Resistance values and materials used for components incorporated in fuel pressure gauge circuit

Components	Rheostat sections АБ,БВ,ВГ,ГА	Coils K_1 and K_2	Coils K_2 and K_4	Resistor R_1	R_2	R_3
Resistance, ohms	300	140	110	0-25	80-120	45
Wire material	Constantan ПЭЛ, dia. 0.05 mm	Copper ПЭЛ, dia.0.09 mm	Copper ПЭЛ, dia.0.09 mm	Constantan, dia. 0.12 mm		

Fuel pressure gauge transmitter П-100 consists of the following two main assemblies: the sensing assembly and the amplifying transmitter mechanism.

The sensing assembly takes up fuel pressure and actuates the mechanism. The sensing element is represented by a flexible corrugated diaphragm capsule with a box, whose space is connected to the pressure checked.

The last element of the amplifying transmitter mechanism comprises a slide, moving along a linear potentiometer. The potentiometer is divided by three intermediate branches into four sections having identical resistance values. As the external leads of the potentiometer are connected to each other, they act as a circular potentiometer.

The action of the ratiometer with a moving magnet is based on a property of a freely suspended magnet to set along the axis of the magnetic field, created by the coils due to the flow of electric current.

With no pressure in the diaphragm capsule of transmitter П-100, moving contact П of the potentiometer occupies the position exactly in between points 1 and 2. Assuming that the coil resistance values are equal, the currents in coils K_1 and K_2 of the ratiometer will be equal as well, their value being considerably in excess of the currents flowing in coils K_3 and K_4; coils K_3 and K_4 are connected in series into the larger sections of the potentiometer (sections П-1 and П-2 for coils K_1 and K_2, sections П-3 and П-4 for coils K_3 and K_4 respectively). The vector of the resultant (total) magnetic field will be directed as shown in Fig.65, a. The rotor of the indicator will set in the same direction.

Moving contact П is coupled to the sensing element of the transmitter so that as the pressure increases, the contact is displaced from the initial position successively to points 2,3, and 4; this will cause the current value in the coils and hence the magnetic fields to change in the manner allowing the axis of the resultant magnetic field to turn in unison with the movement of contact П.

With pressure amounting to half of the rated value, moving contact П will be in point 3. This means that in coil K_3 the current will be at its maximum. The corresponding vector diagram will look as shown in Fig.65, b (right). The moving magnet will turn in the direction of the resultant field, thereby causing the pointer to set against the division in the middle of the scale.

At maximum pressure contact П will be positioned between points 4 and 1. Accordingly, current redistribution will take place in the circuit, which will determine the direction of the resultant magnetic field vector and of the ratiometer moving magnet (See Fig.65, c).

Thus, one intermediate position of the ratiometer moving system will correspond to each of the intermediate positions of the potentiometer slide.

Operating principle of oil pressure gauge

The oil pressure gauge is a differential pressure gauge, measuring the difference between oil and atmospheric pressures. The pressure gauge consists of a measuring element (indicator) and transmitter П-10.

The oil pressure gauge indicator is represented by a ratiometer of an electromagnetic type with a moving magnet and fixed coils K_1 and K_2, positioned at an angle of 120°.

The construction of the measuring element of the oil pressure gauge is essentially the same as that of the fuel pressure gauge measuring element.

Oil pressure gauge transmitter П-10 differs from fuel pressure gauge transmitter П-100 in that its corrugated membrane is of a different thickness, whereas its potentiometer has no intermediate tapped sections. Besides, the transmitter of the oil pressure gauge is of a differential type; therefore its casing is hermetically sealed and is furnished with a static pressure connection, serving to supply atmospheric pressure to the external side of the membrane.

The circuit of the pressure gauge measuring element (Fig.66) is essentially a bridge having an additional semi-diagonal (resistors R_3 and R_4). Variable sections AC and BC of the potentiometer along with fixed resistors R_1 and R_2 form the bridge arms. Connected into the bridge diagonal are coils K_1 and K_2. Resistor R_5 connected in series with coil K_2 equalizes the coil resistances (the coils have the same number of turns, their dimensions being different). The resistance values as well as the materials and diameters of the winding wires are given in Table 15.

Table 15

Resistance values and materials used for components incorporated in oil pressure gauge circuit

Components	Potentiometer AB	Coils K_1	K_2	Resistors R_1	R_2	R_3	R_4	R_5
Resistance, ohms	255	280	220.	1000-1500	1000-1500	330	2120	60-100
Wire material	Constantan ПЭЛ, dia. 0.1 mm	Copper ПЭЛ, dia. 0.09 mm		Constantan ПЭШОК, dia.0.1-0.12mm		Copper ПЭЛ dia. 0.05 mm		Copper ПЭШО, dia. 0.1 mm

The operating principle of the differential oil pressure gauge is as follows. Oil pressure is taken up by the sensing element - the corrugated diaphragm which deflects under the pressure and displaces moving contact C on potentiometer turns AB through the medium of the amplifying transmitter mechanism; this causes a chang in the ratio of potentiometer arms AC and BC. The ratio of the potentiometer arms

[redacted]

is measured with the aid of a ratiometer, which acts as a rotating magnet capable of setting in the direction of the axis of the magnetic field created by energized coils K_1 and K_2.

Operation of the oil pressure gauge is diagrammed in Fig.67. The currents flowing in coils K_1 and K_2 may be regarded as:

(a) sum total of currents I, flowing in the coils with potentiometer moving contact C in the middle position;

(b) sum total of currents i induced as a result of moving contact deflection from the middle position.

With the oil pressure amounting to the half of the maximum permissible value, moving contact C is positioned exactly in the middle of potentiometer ACB (Fig.67,b). In this case the circuit comes to be absolutely symmetrical, as resistors R_1 and R_2 and hence the potentials at points A and B are identical in value.

Current I, flowing along semi-diagonal R_3 and R_4 branches (from point Д, common to both of the coils) into two currents equal in value and opposing as to the direction of flow. As the coils have the same number of turns, the resultant field, and consequently the moving system of the ratiometer will set in the middle of the scale.

As soon as a pressure change takes place, the circuit symmetry becomes disturbed. As a result, a potential difference, directly proportional to the magnitude of the pressure change, will be created between points A and B.

This potential difference may be positive or negative, depending on the direction in which moving contact C travels from the middle position. The potential difference arising between points A and B causes additional current i to flow in both of the coils in the same direction. Current i disturbs balance of currents flowing in the ratiometer coils, as the currents flowing in the coils will amount now to I+i and I-i respectively.

The resistance of the circuit has been so selected that when pressure is equal to zero, currents I and i become equal in value. Then current in coil K_2 will drop to zero, whereas in coil K_1 it will grow to double its initial value. In this case the moving system of the ratiometer will be positioned along the axis of coil K_1 and the pointer will set against the zero mark of the scale (Fig.67,a).

When the pressure checked reaches the maximum value, currents I and i will become equal again. Then current in coil K_1 will drop to zero, whereas in coil K_2 it will double its value. The moving system of the ratiometer will be arranged along the axis of coil K_2, and the pointer will set against the maximum pressure mark on the scale (Fig.67,c).

Thus, only one definite position of the ratiometer moving system will correspond to each of the positions of the potentiometer moving contact.

Operating principle of oil thermometer

The oil thermometer, type ТУЭ-48, is a general-purpose resistance thermometer. It consists of a measuring element (indicator) and transmitter П-1.

The ratiometer employed by the indicator is identical to that incorporated in the oil pressure gauge.

Oil thermometer transmitter П-1 is essentially a thermo-sensitive element made of 0.15-mm dia. nickel wire. The resistance values and materials used for the components incorporated in the oil thermometer circuit are presented in Table 16.

Table 16

Resistance values and materials used for components incorporated in oil thermometer circuit

Components	Loops		Resistors							
	I	II	R_1	R_2	R_3	R_4	R_5	R_6	R_7	R
Resistance, ohm	280	220	470	60	440	Up to 42 79% 29% $(R_4 + R_5)$		100 (R_4+R_5)	80	8-153
Wire material	Copper		Manganin	Copper	Manganin	Copper	Manganin		Copper	Nickel

The oil thermometer (Fig.68) makes use of the thermo-sensitive element ability to change its resistance depending on the variations in the oil temperature checked. Each of the temperature values is represented only by one definite resistance value which is being constantly checked with the aid of the ratiometer.

The resistance of the circuit is so selected that when the oil temperature equals -50°C, and the transmitter resistance value is equal to 68.3 ohms, the potentials at points A and C are equal, while the potential at point B is higher than that at point A. In loop I current will flow from point B to point A, whereas loop II will be deenergized. Consequently, intensity H, created by loop I will increase, thereby causing the vector of resultant field H_p and the moving magnet of the ratiometer to occupy the extreme left-hand position, for example, in the direction of axis II - II (Fig.69); as a result, the instrument pointer will read -50°C. With an increase of the oil temperature, the resistance of the transmitter will grow, causing an increase in the potential at point A. At an oil temperature of +50°C the transmitter resistance will amount to 108.8 ohms. In this case the potential difference between points B and A will become equal to the potential difference between points A and C. Current will flow from point B to point A and from point A to point C; the currents in the loops and the intensity of magnetic fields H_{K1} and H_{K2} created by these currents will be the same, while resultant field H_p will be arranged in the direction of axis I - I along which the moving magnet will be positioned; the pointer will read a temperature of +50°C.

With the oil temperature further increased, the potential at point A will be approximating the potential at point B thereby gradually increasing in comparison with the potential at point C. Current in loop I will be decreasing and in loop II - increasing; as soon as the oil temperature reaches +150°C, and the transmitter resistance amounts to 153 ohms, current in loop I will drop to zero, whereas current in loop II will reach its maximum value. The moving magnet will set along the vector of the resultant magnetic field, for example along axis III-III, and the instrument pointer will read a temperature of +150°C.

Remote-Reading Pressure Gauge ЭДМУ-3

Purpose

The remote-reading pressure gauge of the ЭДМУ-3 type is designed for measuring low pressure of the fuel upstream of the ПН-28-15 equipment. The aircraft is

[redacted]

50X1-HUM

fitted with two sets of the ЭДМУ-3 pressure gauges, each set consisting of an indicator and a transmitter. The indicators are arranged on the left-hand instrument board, the transmitters being installed on the engines. Both ЭДМУ-3 sets are switched on by means of circuit breakers АЗС-2 located on the circuit breaker panel of the right-seat pilot (Fig.70).

The indicator of the ЭДМУ-3 set is a magnetic ratiometer, having a moving The indicator of the ЭДМУ-3 set is a magnetic ratiometer, having a moving magnet and two fixed coils K_1 and K_2, positioned at an angle of 120°; the moving system of the ratiometer consists of a flat iron-nickel-aluminum magnet, mounted on a cylindrical axle. The same axle carries a pointer and a cross-piece with three balancing weights. The moving system is enclosed inside a copper damper, embraced by two coils K_1 and K_2. Moving system oscillations in the damper induce currents which slow down the magnet thereby causing the oscillations to cease. From the point of view of its construction and operating principle the ratiometer of the ЭДМУ-3 set is identical with the ratiometer employed in the measuring circuit of the oil pressure gauge.

The sensing element of the transmitter of the ЭДМУ-3 set is represented by a flexible bronze diaphragm capsule, taking up the pressure checked through a dynamic pressure connection. The static pressure connection serves for supplying static pressure to the inner space of the casing.

The linkage mechanism of the transmitter consists of a rod, rigidly connected to the capsule; the rod works against one of the arms of a rectangular lever-bell crank. This causes the bell crank to turn and to displace the carrier, attached to the brush holder; the latter turns about its axis thereby displacing the moving contact on the potentiometer.

Main technical data of ЭДМУ-3 set

Measuring range .... from 0 to 3 kg/sq.cm.
Voltage supplied from aircraft D.C. mains .... 27 V ±10%
Current consumed .... 0.1 A
Permissible overload .... 4 - 5 kg/sq.cm.
Main error:
 on scale marks .... 0.6; 1.2; 1.8; 2.4 - - ±0.12 kg/sq.cm.
 on scale marks .... 0 and 3 - ± 0.2 kg/sq.cm.

The electric bridge resistor values are given in Table 17.

Table 17

ЭДМУ-3 set electric bridge resistor values

Circuit components	Coils			Resistors				
	K_1	K_2	ab	R_1	R_2	R_3	R_4	R_9
Resistor value,ohms Wire material	280 Copper	220 Copper	259 Constantan	1290 Constantan	1290 Constantan	2120 Copper	300 Constantan	90 Copper

Operating principle

The operating principle of pressure gauge ЭДМУ-3 is as follows.

An increase in pressure makes the diaphragm capsule expand and cause the amplifying transmitter mechanism to displace contact c, sliding along linear potentiometer ab. As a result, resistance between points b and c will increase; while resistance between points a and c will decrease. The ratio between resistances ac and bc is measured with the aid of a ratiometer. Flowing in the ratiometer coils are currents whose ratio is dependent on the pressure checked.

With the pressure equal to zero (p=0), that is when the resistance of section ac exceeds the resistance of section cb, there is no current in coil K_1 while in coil K_2 the current is at its maximum value (Fig.71, a). In this case the magnetic field is created only by coil K_2, and the moving magnet will set along the axis of coil K_2, causing the pointer to read zero pressure.

As the pressure increases, contact c approaches point a, as a result of which current drops in coil K_2 and increases in coil K_1. Accordingly, the magnetic flux of coil K_2 will decrease, whereas the magnetic flux of coil K_1 will increase. This will cause the axis of the resultant magnetic field to turn. The magnet with the pointer will turn in the same direction thereby reading a pressure increase. As soon as the pressure reaches the mean value ($p = 0.5p_{max}$), the bridge circuit becomes symmetrical, as the resistance of section ac is equal to the resistance of section BC;in this case currents of the same magnitude will flow in both coils thereby creating similar magnetic fields. The axis of the resultant magnetic field will run symmetrically, at the same angles to the coil axes (Fig. 71, b); the magnet will set along this axis and the pointer will read the mean pressure.

At a maximum pressure, ($p=p_{max}$), when resistance of section ac approximates zero, current in coil K_2 will drop to zero causing the magnet to set along the axis of coil K_1; in this case the pointer will indicate the maximum pressure (Fig.71,c).

With the power supply source disconnected, the ratiometer pointer is returned to the zero mark of the scale with the aid of an additional fixed magnet, operating in conjunction with the main moving magnet.

Thermoelectric Thermometer ТВГ-11

Purpose

Thermometer ТВГ-11 is of a thermoelectric type serving for measuring mean temperature of engine exhaust gases. The thermometer comprises indicator ТВГ-1 and four thermocouples Т-1 connected in series.

Indicator ТВГ-1 is essentially a moving coil millivoltmeter whose moving system is represented by a loop rotating between the poles of a permanent magnet. The measuring range of the scale is from 300 to 900°C. The scale numbering is 3, 4 and 9, each number denoting hundreds of degrees. The division value amounts to 10°C.

The thermocouple of the Т-1 type is made in the form of a hollow rod fabricated in heat-resistant steel; the rod accommodates the ends of the thermo-electrodes, welded together and forming the hot junction of the thermocouple.

Nickel-cobalt and alumel alloys are used for the positive and negative electrodes respectively. Inside the rod, the electrodes are bent at an angle of 90°. The gas stream entering the space surrounding the hot junction through the cutout provided at the end of the rod and escaping via the hole 0.8 mm in diameter, has a much lower velocity, than in the engine exhaust unit. This eliminates the error due to high velocity of gas flow.

The thermocouples are connected to each other and to the indicator by means of copper wire of the ЕПРТС mark, 1.5 sq. mm in cross-section. Series connection of the thermocouples is accomplished in the terminal box.

The aircraft is equipped with two sets of the above thermometers, one for each engine. The indicators are located on the left-hand pilot instrument board, the thermocouples being arranged on the engines, along the exhaust unit circumference. Each of the thermocouples is held in position with the aid of special slots provided on the connections, and pins arranged on the thermocouple heads.

Main technical data of thermometer TBT-11

Measuring range	300 - 900°C
Operating range	440 - 750°C
Resistance of thermometer external circuit at the ambient air temperature amounting to +20°C	2.5 ± 0.1 ohms
Weight of the set	3900 gr

The indicators and the thermocouples are interchangeable only with the respective components of the same calibration group, which is duly marked on the indicator scale and on the thermocouple cover.

Thermometer reading error within the temperature range of from 450 to 750°C should not exceed 22°C.

Operating principle

Thermometer TBT-11 employs a thermoelectric principle in its operation (Fig.72), which can be briefly described as follows. Variations in the temperature of the engine exhaust gases cause thermoelectromotive force to be generated in each of the thermocouple. This force is proportional to the temperature of the given area. The total thermoelectromotive force developed by the four thermocouples is applied to the ends of the wires and is measured by the moving coil millivoltmeter.

When current flows through the millivoltmeter loop, the latter is acted upon by the torque resulting from the interaction of the loop magnetic field produced by the current, with the permanent magnet field. As a result, the loop and the rigidly connected pointer will move until the torque is equalised by the force of the coil springs. The angle of the loop deflection is proportional to the magnitude of the current flowing through the loop. The resistance of the thermometer circuit being constant, the magnitude of the current flowing through the loop and the angle of its deflection are proportional to the thermoelectromotive force of the thermocouples and consequently to the temperature checked.

The magnitude of the thermoelectromotive force depends on the material of the thermoelectrodes starting to develop thermoelectromotive force when the hot junction is heated to a temperature of 300°C, and on the temperature difference between the working end (hot junction), enclosed in the rod casing, and the free ends (cold junction), brought to the indicator with the aid of wires.

Thermoelectric Thermometer TCT-29

Purpose

Thermometer TCT-29 is of a thermoelectric type consisting of indicator TCT-2 and thermocouple T-9 with compensatory leads. The thermometer is designed for measuring the temperature of turbo-starter exhaust gases. The aircraft is furnished with two sets of the above thermometer. The indicators are located on the turbo-starter panel, the thermocouples being arranged in the exhaust pipe of each turbo-starter.

Indicator TCT-2 is essentially a moving coil millivoltmeter, whose scale is calibrated in degrees from 0 to 900°C; the scale numbering is 0; 3; 6; 9; the division value is 20°C.

Thermocouple T-9 is of a tubular type; it is made from heat-resistant steel; the tube encloses the ends of thermoelectrodes welded together and forming the working end of the thermocouple.

The thermoelectrodes are manufactured from chromel (the positive electrode) and from alumel (the negative one). To reduce delay of indications to the minimum, the thermocouple tube is provided with two side slots. The multi-core copper-constantan wire of the КНТО-М mark is used as a compensatory wire.

Main technical data of thermometer TCT-29

Measuring range	from 0 to 900°C
Operating range of scale	from 600 to 800°C
Resistance of thermocouple complete with compensatory wire	9±0.6 ohms
Weight of the set	4 kg

The indicators, thermocouples, and compensatory wire sections are interchangeable (respectively).

Thermometer reading error at an ambient air temperature of +20°C should not exceed:

within the operating range	±20°C
beyond the operating range	± 35°C

Operating principle

The operating principle of the thermometer of the TCT-29 type (Fig.73) is based on the measurement of the thermoelectromotive force generated by the thermocouple due to the difference of temperatures between the hot junction (the operating end of the thermocouple) enclosed in the tube and the cold junction (the free end of the thermocouple) brought to the indicator by means of the compensatory wire. The thermoelectromotive force developed due to the variations in the temperature of gases conveyed through the turbo-starter exhaust pipe is measured by the millivoltmeter whose operating principle is referred to in the description of thermometer TBT-11.

Pressure Signalling Unit СД-24А

Purpose

The pressure signalling unit of the СД-24А type (Fig.74) is designed for closing the electric circuit when pressure in the oil system of the turbo-starter

50X1-HUM

increases in excess of a specified value, and for opening the circuit when the oil pressure drops below another specified value.

The sensing element of the signalling unit is a flexible corrugated diaphragm whose inner space is connected to the turbo-starter oil line. The circuit is closed by the action of a flat lower spring contacting the diaphragm fixed centre boss. The contact on the lower spring closes with the contact attached to the upper flat spring. The circuit incorporates a pilot lamp.

The aircraft is furnished with one pilot lamp per two engines; it is located on the turbo-starter panel. The pressure signalling units are mounted on the compressor front casings of the engines and are connected to the turbo-starter oil lines through the medium of tubing.

Main technical data of pressure signalling unit CЖ-24A

Signalling unit contact system is opened when pressure drops below .... 3.5 kg/sq.cm.

Instrument operating error at a temperature of +20, +50 and -60°C does not exceed .... ±0.3 kg/sq.cm.

The instrument is designed for switching off a 5 W pilot lamp, with voltage amounting to .... 27 V ±10%

With a pressure of 800 mm Hg supplied through static and dynamic connections simultaneously, pressure drop in static chamber within 1 min. should not exceed .... 8 mm Hg

No pressure drop should be observed in the dynamic chamber within 5 min., with pressure amounting to 10 kg/sq.cm.

Weight of the signalling unit .... not over 400 gr

Operating principle

The operating principle of signalling unit CЖ-24A is based on the interdependence between varying pressure and deflection of the sensing element (diaphragm).

With the turbo-starter being started, and oil pressure in its system building up, the fixed centre boss of the diaphragm will be forced by the measured pressure to move and work against the contact assembly, thereby closing the pilot lamp circuit. The pilot lamp will light up thereby indicating pressure in the oil line of the turbo-starter.

2. SPEED MEASURING INSTRUMENTS

The speed measuring instruments include: remote-reading electric tachometer TЭ-5-2 and two-pointer remote-reading electric tachometer TЭ-45.

Remote-Reading Electric Tachometer TЭ-5-2

Purpose

The remote-reading electric tachometer TЭ-5-2 is designed for measuring the speed of the engine rotor. It consists of a three-phase A.C. generator of the Д-15 type and a single-pointer indicator.

The aircraft is equipped with two TЭ-5-2 sets. The generators are mounted on the engine drive frames and are coupled to the engine drives with the aid of flanges. The indicators are arranged on the left-hand instrument board.

Main technical data of tachometer TЭ-5-2

Measuring range .... from 0 to 5000 r.p.m.

Division value .... 50 r.p.m.

The generators and indicators are respectively interchangeable. Voltage across the terminals of the generator two phases, with the generator loaded by its indicator and with an engine speed amounting to 4000 r.p.m., should be from 24 to 26 V.

Indicator weight .... 750 gr

Tachometer generator weight .... 1650 gr

The reading error of the instrument should not exceed the following values:

Measuring range, r.p.m.	Instrument error in % of rated scale value, r.p.m. at temperatures					
	+20±5°C		+50±5°C		-60±5°C	
	%	r.p.m.	%	r.p.m.	%	r.p.m.
00-3500	±1	±50	±1.6	±80	±2.6	±130
500-4800	±0.5	±25	±0.8	±40	±1.3	±65
800-5000	±1	±50	±1.6	±80	±2.6	±130

Operating principle

Tachometer TЭ-5-2 operates on the following principle: generator Д-15 transforms the engine rotor speed into the electromotive force, the generated current frequency being directly proportional to the r.p.m (Fig.75).

The spinning rotor of the generator induces three-phase current in the stator, the current being delivered to the synchronous motor of the indicator.

As a result, a rotating magnetic field is produced in the motor stator winding, which causes rotation of the rotor, consisting of two cruciform permanent magnets and a hysteresis disc mounted on a common shaft.

The permanent magnets serve to provide for starting and steady running torques at low speeds, when the magnitude of the magnetic flux is not great.

The function of the hysteresis disc is to ensure a starting torque at higher speeds, when the magnitude of the magnetic flux is great but the additional permanent magnet is not capable of providing synchronous operation of the indicator motor.

At high speeds the hysteresis disc runs the rotor to an approximately synchronous r.p.m., the additional magnet providing for absolute synchronism.

The additional permanent magnet is freely fitted on the shaft, on a common bushing with the hysteresis disc, to which it is coupled through the medium of a spring, transmitting the torque to the shaft of the synchronous motor.

The tachometer indicator utilizes the induction principle.

The indicator synchronous motor rotates the magnet assembly secured at the end of the shaft. The magnetic field produced by the magnets crosses the sensing element (a cap of aluminum-manganese alloy) thereby inducing eddy currents, which act on the magnetic field to produce a torque.

[redacted]

Due to the torque, the sensing element tends to turn about its axle. The other end of the sensing element axle carries a pointer, indicating the engine rotor speed on the instrument scale.

A coil spring attached to the axle of the sensing element represents the counteracting force limiting the motion of the sensing element.

To make the pointer more stable and to improve instrument readings, provision has been made for magnetic damping of the indicator moving system. The damper, similar to the magnet assembly, consists of six pairs of magnets, whose faces are interposed with an aluminium disc, mounted on the axle of the indicator moving system.

Two-Pointer Remote-Reading Electric Tachometer T3-45

Purpose

Tachometer T3-45 is designed for measuring the speed of the turbo-starter rotor within the range of from 400 to 3500 r.p.m.

The aircraft is fitted with two T3-45 sets – one per each turbo-starter. Each of the sets includes a generator installed on the turbo-starter reduction unit drive, and an indicator, mounted on the turbo-starter panel.

Main technical data of tachometer T3-45

Maximum speed measured	3500 r.p.m.
Scale operating range	from 400 to 3000 r.p.m.
Instrument error at ambient air temperature of	+20°C ±35 r.p.m.
	+50°C ±70 r.p.m.
	-60°C ±70 r.p.m.
Gear ratio from turbo-starter to generator	1:10
Indicator weight	625 gr
Generator weight	1190 gr

Operating principle

Tachometer set T3-45 transforms speed into current of definite frequency. The tachometer generator is a three-phase A.C. machine. The frequency of the current generated is directly proportional to the turbo-starter rotor r.p.m.

The three-phase current produced by the generator energizes the synchronous motor of the indicator. The motor r.p.m. is directly proportional to the current frequency. The rotary speed of the synchronous motor is measured by the indicator with the aid of an induction meter (Fig.76).

From the point of view of its operating principle and construction, tachometer T3-45 does not differ from tachometer T3-5-2 (see Fig.75). The small pointer is fixed on a bushing put on the axle of the sensing element. Fitted on the end of this axle is the big pointer. The rotary motion of the small pointer is effected through the medium of four gears, reducing the angle of turn by 10 times.

Arrangement of the transmitters and generators on the engine is illustrated in Fig.77.

3. TOTAL FUEL FLOW METER PTC-16

Purpose

The total fuel flow meter of the PTC-16 type is designed for measuring the amount of fuel consumed by the engine; it also serves to indicate the amount of fuel left in the aircraft tanks, provided the fuel lines are in proper condition and there is no fuel return to the tanks from the line downstream of the fuel flow transmitter.

Fuel flow meter PTC-16 (Fig.79) consists of a transmitter, indicator and a thyratron interrupter with a filter.

The aircraft is fitted with two fuel flow meter sets PTC-16. The transmitters are installed in the engine fuel lines, with the arrows on the bodies turned to the direction of fuel flow; the indicators are mounted on the pilots' middle instrument board; the thyratron interrupters are arranged on the navigator-radar operator starboard side.

Fuel flow meters PTC-16 are supplied with D.C. via circuit breakers AЗC-2 mounted on the circuit breaker panel of the right-seat pilot. A.C. of 115 V, 400 c.p.s. is delivered to the instruments via glass tube safety fuses CП-2, accommodated in the navigator electric panel.

Main technical data of fuel flow meter PTC-16

Fuel flow meter PTC-16 is capable of operation, with fuel consumed at a rate of from 1200 to 16,000 lit/hr.

The reading error of the fuel flow meter set at normal operating conditions does not exceed ±2.5%.

The reading error at a temperature of +50 and -60°C does not exceed ±4.5% of the indicator scale rated value.

Pressure differential in the transmitter at maximum fuel consumption of 16,000 lit/hr and with the impeller running does not exceed 0.25 kg/sq.cm.; with the impeller inoperative the pressure differential amounts to not more than 0.4 kg/sq.cm.

The transmitter housing, as well as the pipe connection-to-housing joint are pressure-tight; they can withstand a pressure of 9 kg/sq.cm.

The fuel flow meter is capable of normal operation at vibration overloads of 4g (for the transmitter); 2.5 g (for the thyratron interrupter); and 1.5 g (for the indicator), with the frequency amounting to 20-80 c.p.s.

D.C. voltage	27 V ±10%
A.C. voltage	115 V ±10%, at 400 c.p.s.
Power consumed	40 W
Thyratron firing lag	100-200 millisec.
Transmitter weight	800 gr
Indicator weight	650 gr
Thyratron interrupter weight	1100 gr

Fuel flow meter indicator

The indicator of fuel flow meter FTC-16 (Fig.79) is essentially an electromagnetic counter of pulses delivered by the fuel flow meter transmitter. The scale is calibrated in lit. of fuel. The measuring range is from 0 to 20,000lit. The division value amounts to 50 lit.

The indicator mechanism consists of an electromagnetic relay, a reduction gear, and a pointer setting gear.

The sensing element of the indicator is represented by the electromagnet. Whenever the contacts of the transmitter relay are closed (that is every 30 revolutions of the impeller), the electromagnet core is attracted thereby turning the ratchet wheel by one tooth. The ratchet wheel motion is imparted through the medium of gears to the pointer, which moves in the counter-clockwise direction.

The pointer setting gear (Fig.80) allows the pointer to be set against any division of the scale, depending on the amount of fuel held by the aircraft tank groups.

After the aircraft has been refuelled, the indicator pointer should be set against the scale division, corresponding to the amount of fuel contained in the aircraft tanks. This is done by manipulating the pointer setting gear accommodated in the indicator and covered with a strip. The strip attachment screw is loosened and the strip is moved aside, then a screw-driver is fitted into the gear pin slot, and the pin is slightly pressed. This makes the gear engage the intermediate gears by rotating the screw-driver in the required direction the indicator pointer is set against the respective division of the scale.

Thyratron interrupter

The thyratron interrupter (Fig.81) is composed of a power transformer, a thyratron, capacitors, resistors, and a voltage divider. All these components are electrically interconnected and mounted on a duralumin panel.

The power transformer serves for energizing the anode circuit (winding 48 V) and the filament circuit of the thyratron (winding 6.3 V).

The blocking capacitor rated for 10 μF is designed for diverting the alternating component of the anode current from the indicator relay.

The capacitor rated for 1.0 μF and the resistor rated for 150 kilohms make up tuned circuit R C within the grid circuit; the tuned circuit delays thyratron firing when the transmitter contacts are open.

Capacitors rated for 1 μF and the resistors rated for 1. kilohms [illegible] the decoupling elements of the filter, serving for elimination of the radio interference in the wires running from the thyratron interrupter to the transmitter and to the aircraft D.C. mains. The blocking capacitors rated for 1.0 μF and 0.5 μF are designed to suppress radio interference in the wire running from the thyratron interrupter to the aircraft mains rated at 115 V, 400 c.p.s.

The voltage divider is composed of two resistors rated for 400 and 1600 ohms. It provides grid voltage of 9.4 V required for thyratron control, with the aircraft mains voltage amounting to 27 V.

The vitrified resistor rated for 75 ohms is used for reducing the mean value of the anode current to 100 mA.

For connection to the transmitter, indicator and the A.C. power supply ource, the thyratron interrupter is furnished with a five-pin plug connector; nnection to the D.C. power supply source is accomplished through the use of a ngle-pin plug connector.

Fuel flow meter transmitter

The transmitter of fuel flow meter FTC-16 (Fig.82) consists of a housing, guide vane assembly, an impeller, a reduction gear, a magnetic coupling, and contact-pulse mechanism.

The central part of the transmitter housing accommodates a guide vane as- mbly with an impeller and a worm reduction gear. The housing has two connections the ends, having a clear opening of 42 mm in diameter. The connections are signed for installation of the transmitter in the fuel line of the engine.

The impeller has five blades. The impeller axle runs in ball bearings of ainless steel, accommodated in the guide vane assembly interior chamber. The iddle portion of the axle is made in the form of a worm engaging the worm wheel ich transmits the rotation of the impeller to the contact-pulse mechanism rough the magnetic coupling.

The magnetic coupling consists of two permanent magnets. The driving magnet rigidly secured at the end of the output shaft of the worm reduction gear, the iven magnet being mounted on the shaft of the contact-pulse mechanism cylindrical terrupter. The magnets are separated by the cover of the worm reduction gear amber to prevent fuel from finding its way into the contact-pulse mechanism. e cover is fabricated from diamagnetic material.

The contact-pulse mechanism comprises a cylindrical interrupter, and two xed platinum-iridium brushes.

Fuel entering the inlet connection flows through the guide vane assembly d actuates the impeller blades, set at a definite angle to the fuel flow. The eed of impeller rotation is proportional to the amount of fuel flowing through e transmitter housing. At the maximum rate of fuel consumption amounting to ,000 lit/hr, the impeller develops a speed of 2400 r.p.m.

The impeller rotates the driving two-pole magnet through the worm drive ig.83) providing for a reduction ratio of 1:30. The driving magnet actuates the iven magnet located above, outside the transmitter housing. Mounted on a common le with the driven magnet is the cylindrical interrupter, contacting the fixed ushes. While turning through one revolution, the interrupter closes and opens mes) the grid circuit of the thyratron, thereby delivering one pulse to the dicator relay. Each litre of fuel, flowing through the transmitter is equivalent 0.3 pulse. The operating time of the indicator relay (time elapsing from the ent the contacts of the transmitter interrupter are opened to the moment the re of the indicator relay is attracted) amounts to about 150 millisec.

For adjustment of the impeller to a predetermined speed, the impeller proper d the enclosing duct are given a conical shape. To change the impeller speed, e impeller should be displaced in the axial direction. This changes the earance between the blades and the housing. As the velocity of fuel flow is pendent on the passage area of the duct, the impeller will change its speed as ll. With the impeller shifted towards the guide vane assembly, the fuel flow locity will increase resulting in the increase of the impeller speed. If the peller is moved away from the guide vane assembly, the fuel flow will slow us causing a reduction in the impeller speed.

Operating principle

The operating principle of the fuel flow meter (Fig.84) is as follows. Fuel flowing through the fuel flow meter transmitter at a certain velocity imparts rotary motion to the impeller, whose speed is proportional to the fuel flow velocity and consequently to the amount of fuel conveyed through the transmitter.

The rotating impeller actuates the contact-pulse mechanism through the medium of the reduction gear and the magnetic coupling. The contact system of the pulse mechanism will deliver one pulse to the thyratron grid each time the impeller turns 30 revolutions.

The anode circuit of the thyratron, using A.C. of 48 V, 400 c.p.s., supplied from the winding of the power transformer, incorporates the indicator relay. If a zero or positive potential is applied to the thyratron grid, supply voltage of 48 V is sufficient for firing the thyratron and energising the indicator relay, blocked by the capacitor rated for 10 µF.

If a negative potential of about 9 V is applied to the thyratron grid, anode voltage of 48 V will not be sufficient for firing the thyratron. In this case the thyratron will be blocked, as a result of which the anode current will be cut out thereby deenergising the indicator relay.

The negative potential is delivered to the thyratron grid through the contacts of the pulse mechanism. With the contacts of the pulse mechanism open, the grid potential is equal to zero. This will make the thyratron fire; as a result, the indicator relay connected in the thyratron anode circuit will pick up, which produces a pulse. With the contacts of the pulse mechanism closed, the thyratron grid is supplied with a negative potential causing the thyratron to go out. The indicator relay will drop out thus making for a pause. When the impeller turns 30 revolutions, the interrupter of the pulse mechanism will make one complete revolution and will send one pulse to the indicator relay.

Thus, the number of indicator relay operations is proportional to the number of impeller revolutions, and consequently to the rate of fuel consumption. The indicator relay actuates the indicator pointer through the reduction gear. At any moment the pointer reads the amount of fuel left in the aircraft tanks (for the right and left engines). This amount is found as a difference between the amount delivered into the aircraft tanks and amount conveyed through the transmitter, that is consumed by the engine.

The description of the instrument measuring the amount of fuel is given in Chapter II.

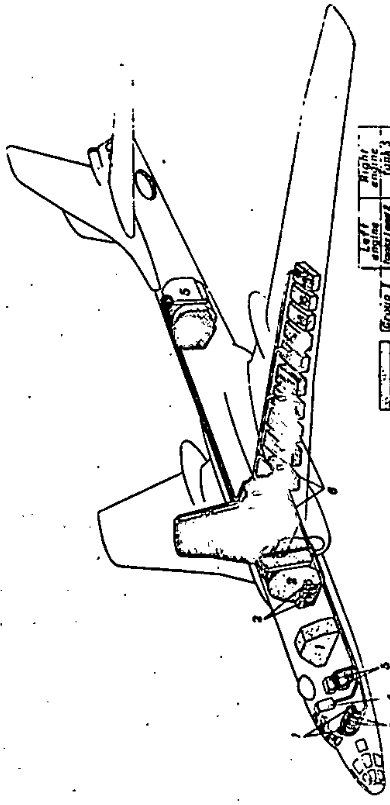

		Left engine	Right engine
▭	Group I	tanks 1 and 2	tank 3
▩	Group II	tank 4	tank 3
▨	Group III	tanks 7-11	tanks 7-11
▧	Group IV	tanks 12-16	tanks 12-16
■	Group V	tank 6	tank 6

Fig. 1. Diagram Showing Arrangement of Fuel Tanks and [illegible] Fuel Gauge Set on Aircraft

1 — fuel gauge indicators; 2 — control unit amplifiers; 3 — selector switches; 4 — fuel supply panel; 5 — fuel gauge measuring equipment equalizers; 6 — fuel gauge transmitters.

[redacted]

Operating principle

The operating principle of the fuel flow meter (Fig.84) is as follows. Fuel flowing through the fuel flow meter transmitter at a certain velocity imparts rotary motion to the impeller, whose speed is proportional to the fuel flow velocity and consequently to the amount of fuel conveyed through the transmitter.

The rotating impeller actuates the contact-pulse mechanism through the medium of the reduction gear and the magnetic coupling. The contact system of the pulse mechanism will deliver one pulse to the thyratron grid each time the impeller turns 30 revolutions.

The anode circuit of the thyratron, using A.C. of 48 V, 400 c.p.s., supplied from the winding of the power transformer, incorporates the indicator relay. If a zero or positive potential is applied to the thyratron grid, supply voltage of 48 V is sufficient for firing the thyratron and energizing the indicator relay, blocked by the capacitor rated for 10 μF.

If a negative potential of about 5 V is applied to the thyratron grid, anode voltage of 48 V will not be sufficient for firing the thyratron. In this case the thyratron will be blocked, as a result of which the anode current will be cut out thereby deenergizing the indicator relay.

The negative potential is delivered to the thyratron grid through the contacts of the pulse mechanism. With the contacts of the pulse mechanism open, the grid potential is equal to zero. This will make the thyratron fire; as a result, the indicator relay connected in the thyratron anode circuit will pick up, which produces a pulse. With the contacts of the pulse mechanism closed, the thyratron grid is supplied with a negative potential causing the thyratron to go out. The indicator relay will drop out thus making for a pause. When the impeller turns 30 revolutions, the interrupter of the pulse mechanism will make one complete revolution and will send one pulse to the indicator relay.

Thus, the number of indicator relay operations is proportional to the number of impeller revolutions, and consequently to the rate of fuel consumption. The indicator relay actuates the indicator pointer through the reduction gear. At any moment the pointer reads the amount of fuel left in the aircraft tanks (for the right and left engines). This amount is found as a difference between the amount delivered into the aircraft tanks and amount conveyed through the transmitter, that is consumed by the engine.

The description of the instrument measuring the amount of fuel is given in Chapter II.

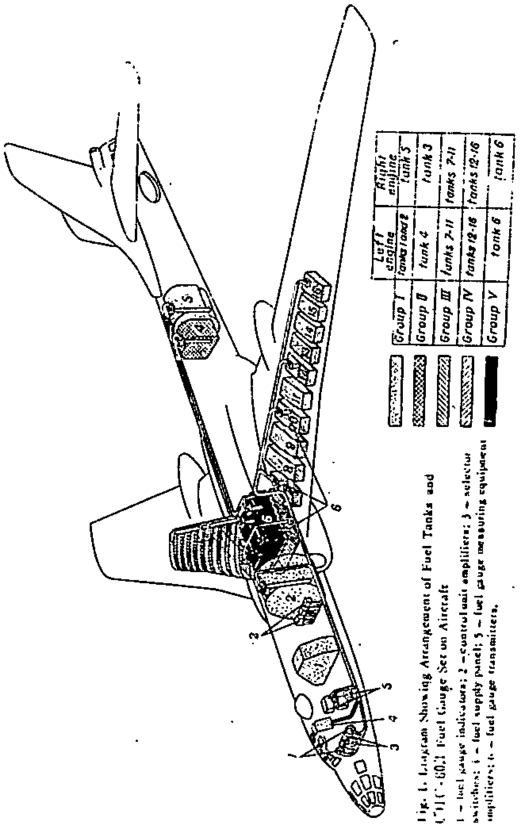

		Left engine	Right engine
▒	Group I	tanks 1 and 2	tank 5
▩	Group II	tank 4	tank 3
▨	Group III	tanks 7-11	tanks 7-11
▧	Group IV	tanks 12-16	tanks 12-16
█	Group V	tank 6	tank 6

Fig. 1. Diagram Showing Arrangement of Fuel Tanks and СЦТ-60.1 Fuel Gauge Set on Aircraft

1 – fuel gauge indicators; 2 – control unit amplifiers; 3 – selector switches; 4 – fuel supply panel; 5 – fuel gauge measuring equipment amplifiers; 6 – fuel gauge transmitters.

[redacted]

50X1-HUM

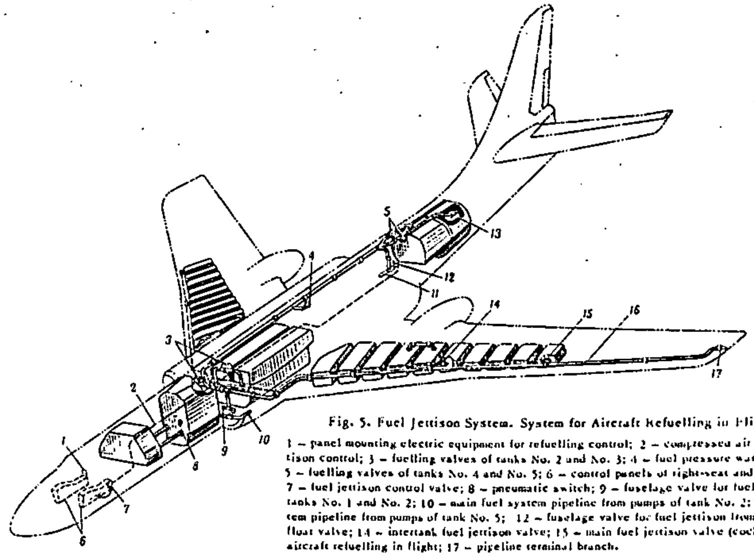

Fig. 5. Fuel Jettison System. System for Aircraft Refuelling in Flight

1 – panel mounting electric equipment for refuelling control; 2 – compressed air line for fuel jettison control; 3 – fuelling valves of tanks No. 2 and No. 3; 4 – fuel pressure warning unit СД-3П3; 5 – fuelling valves of tanks No. 4 and No. 5; 6 – control panels of right-seat and left-seat pilots; 7 – fuel jettison control valve; 8 – pneumatic switch; 9 – fuselage valve for fuel jettison from tanks No. 1 and No. 2; 10 – main fuel system pipeline from pumps of tank No. 2; 11 – main fuel system pipeline from pumps of tank No. 5; 12 – fuselage valve for fuel jettison from tank No. 5; 13 – float valve; 14 – intertank fuel jettison valve; 15 – main fuel jettison valve (cock); 16 – pipeline for aircraft refuelling in flight; 17 – pipeline terminal branch.

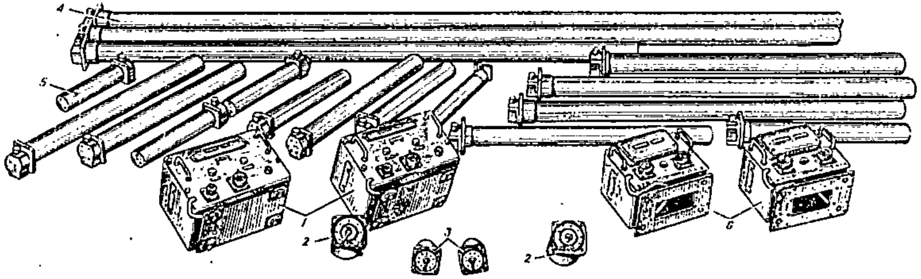

Fig. 6. СПС-602 Fuel Gauge Set

1 – measuring equipment amplifiers УТ-88; 2 – fuel gauge indicators; 3 – fuel gauge selector switches ПП-7; 4 – transmitter (main); 5 – additional transmitter; 6 – fuel consumption control unit amplifiers УАТ-52-5.

[redacted]

50X1-HUM

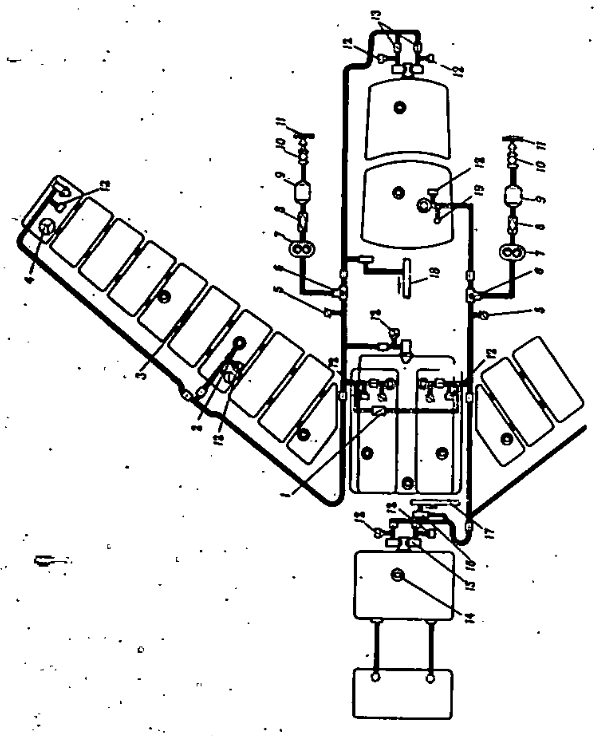

Fig. 2. Main Fuel System Key Diagram

1 – fuel cross-feed valve; 2 – booster pump ЭЦН-Т (mounted vertically); 3 – intertank fuel jettison valve; 4 – main fuel jettison valve; 5 – main dump valve (for left- and right-tank groups); 6 – fuel shut-off valve; 7 – low-pressure pumps (booster pumps ЦН-1А); 8 – transmitters of fuel (flow meters PTC16; 9 – fuel-cooler oil coolers (unit 62); 10 – fuel filters; 11 – high-pressure fuel pumps ПН-28-15 (of plunger type); 12 – pressure warning units СД-3ТУ; 13 – non-return valves; 14 – filler; 15 – booster pump ЭЦН-Т (positioned horizontally); 16 – fuselage fuel jettison valve; 17 and 18 – pipelines for aircraft refuelling in flight; 19 – fuel and water drain cock of tank group.

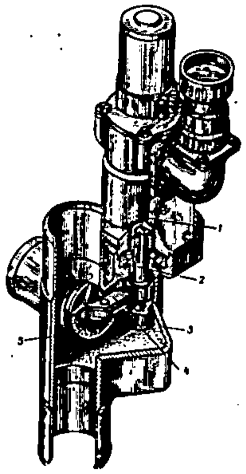

Fig. 3. Fuel Shut-Off Valve

1 – electric mechanism МЗК-2; 2 – valve axle; 3 – valve housing; 4 – valve lever; 5 – valve.

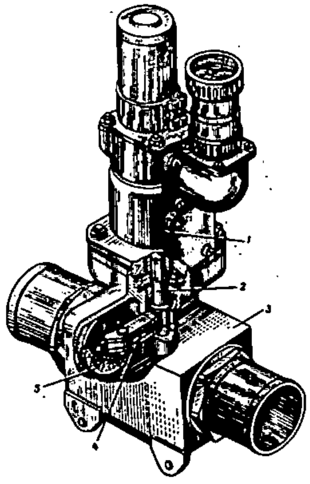

Fig. 4. Fuel Cross-Feed Valve

1 – electric mechanism МЗК-2; 2 – valve axle; 3 – valve housing; 4 – valve lever; 5 – valve.

[redacted]

50X1-HUM

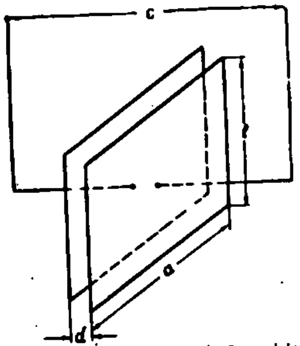

Fig. 7. Accompanying Sketch for Determining Capacitance between Two Flat Plates

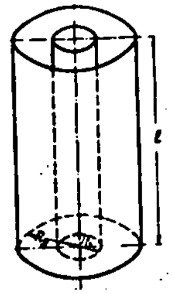

Fig. 8. Accompanying Sketch for Determining Capacitance of Cylindrical Capacitor

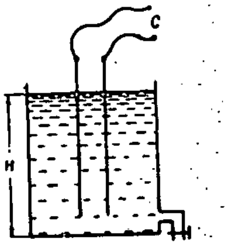

Fig. 9. Accompanying Sketch for Changing of Capacitance between Flat Plates Immersed into Vessel with Kerosene

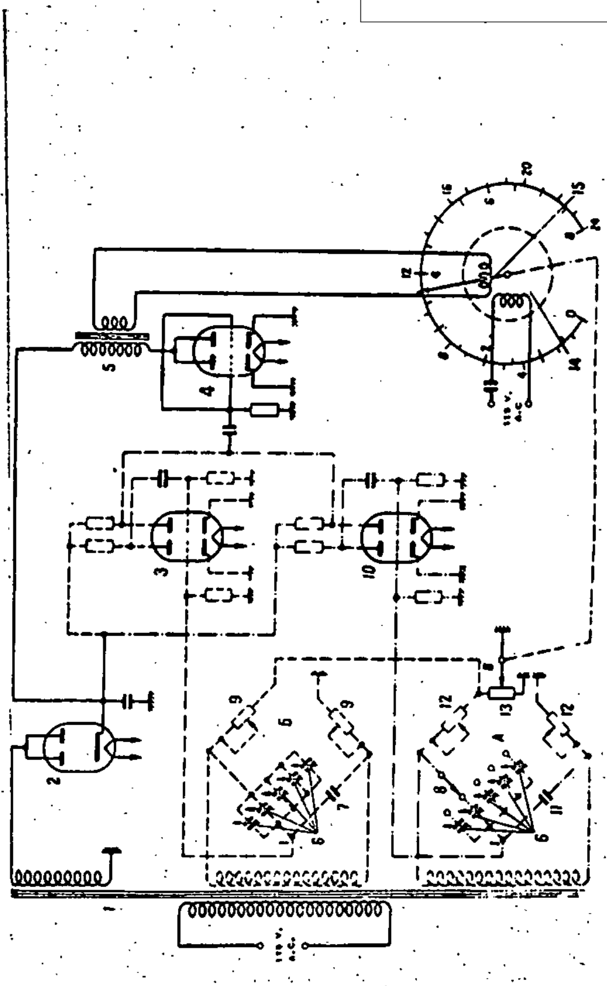

Fig. 10. Diagram of Self-Balancing Bridge

1 – power transformer; 2 – rectifier valve 6II5C; 3 and 10 – amplifier valves 6II9C; 4 – amplifier valve 6II7C; 5 – output transformer; 6 – variable capacitance transmitters; 7 and 11 – fixed capacitors; 8 – switch; 9 and 12 – adjusting resistors; 13 – voltage divider; 14 – electric motor ДИД-0,5 accommodated in indicator; 15 – indicator pointer.

[redacted]

50X1-HUM

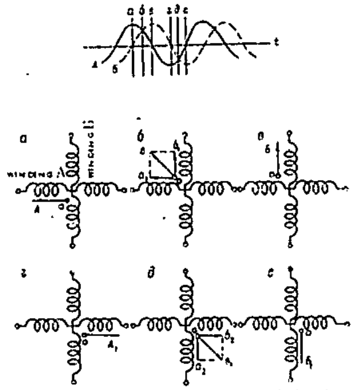

Fig. 11. Changing of Currents in Windings of Electric Motor ДИД-0.5

А and Б — current curves of respective windings; а, б, в, г, д, е — time moments.

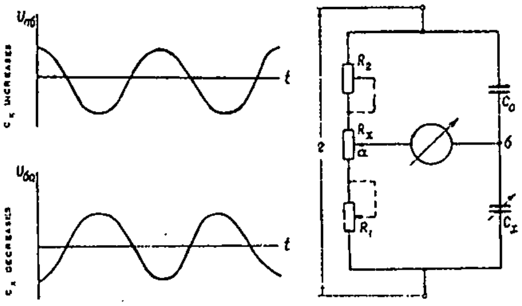

Fig. 12. Changing of Signal Phase

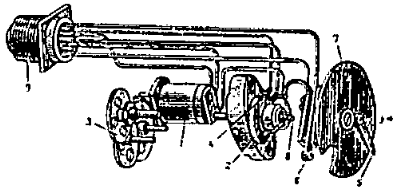

Fig. 13. Mechanical Diagram of Fuel Gauge Indicator

1 — induction motor ДИД-0.5; 2 — rheostat; 3 — reduction gear train; 4 — rheostat slide; 5 — indicator pointer; 6 — contacts; 7 — indicator dial disc; 8 — reduction gear train hand stall; 9 — plug connector.

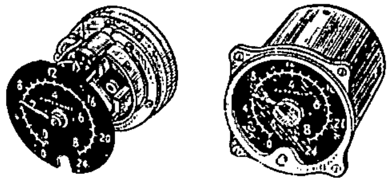

Fig. 14. Fuel Gauge Indicator without Housing and with Housing On

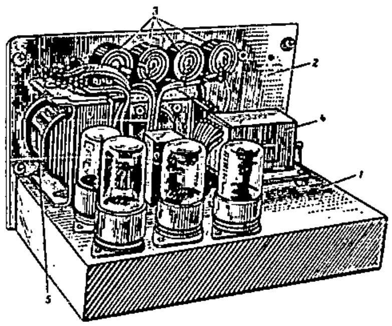

Fig. 15. Fuel Gauge Measuring Equipment Amplifier (with Housing Removed)

1 — mounting frame; 2 — front panel; 3 — rheostats rated for 2 kilohms; 4 — relay III-Б; 5 — power transformer.

[redacted]

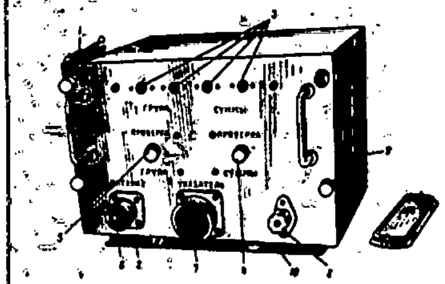

Fig. 16. Fuel Gauge Measuring Equipment Amplifier (in Housing)

1 – negative wire; 2 – shock absorber; 3 – rheostats rated for 3 kilohms; 4 – button "Total Amount Check-Up" (Проверка суммы); 5 – button "Group Check-Up" (Проверка групп); 6 – three-pin plug connector; 7 – twelve-pin plug connector; 8 – safety fuse; 9 – amplifier housing; 10 – bed plate.

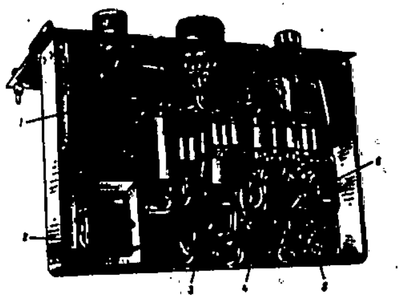

Fig. 17. Fuel Gauge Measuring Equipment Amplifier with Bottom Plate Removed

1 – output transformer; 2 – relay РП-3; 3 – valve 6Н5С; 4 and 6 – valves 6Н8С; 5 – valve 6Н7С.

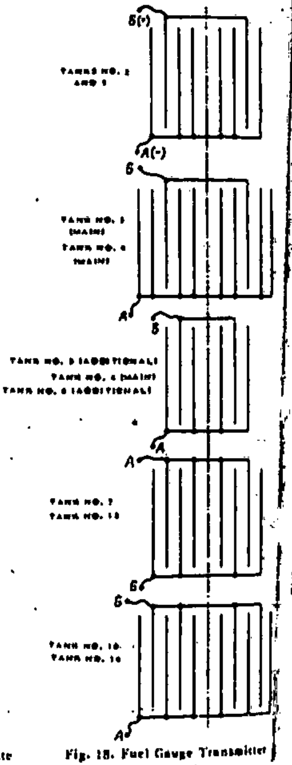

Fig. 18. Fuel Gauge Transmitter Tube Connection Diagram

Fig. 19. Sectional View of Fuel Gauge Transmitter

1 – head; 2 – flange; 3 – profiled tubes; 4 – signalling unit coil; 5 – float; 6 – guiding tube; 7 – plug connector; 8 – earthing screw; 9 – gasket.

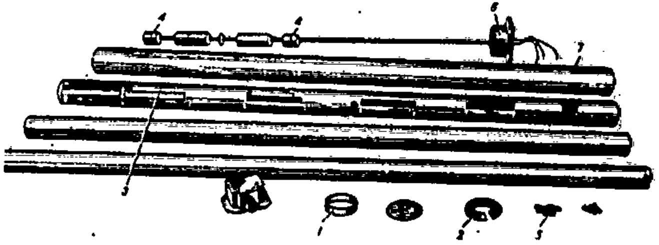

Fig. 20. Fuel Gauge Transmitter, Disassembled

1 and 2 – rings; 3 – profiled tube; 4 – signalling unit coils; 5 – inserts; 6 – flange; 7 – outer tube.

50X1-HUM

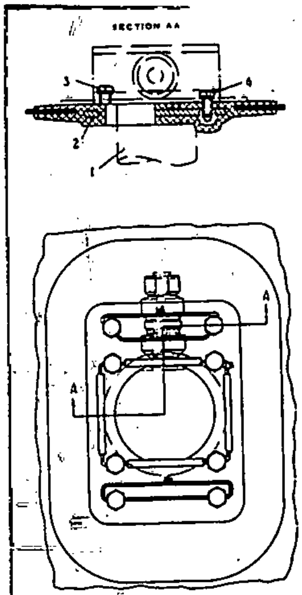

Fig. 21. Attachment of Fuel Gauge Transmitter to Fuel Tank

1 – transmitter; 2 – tank flange; 3 – bolt fastening transmitter to tank flange; 4 – bolt fastening flange to frame.

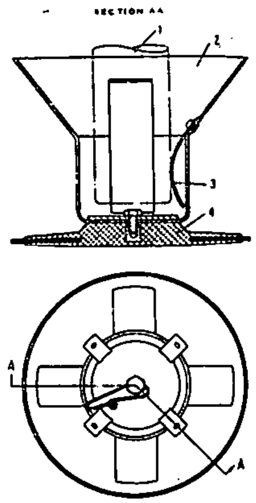

Fig. 22. Attachment of Fuel Gauge Transmitters to Fuselage Tanks No. 2, No. 4, and No. 5

1 – transmitter; 2 – sleeve; 3 – spring; 4 – tank flange.

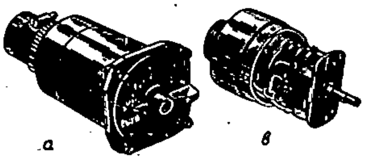

Fig. 23. Rotary Selector Switch ПГ-7

a – in casing; b – with casing removed.

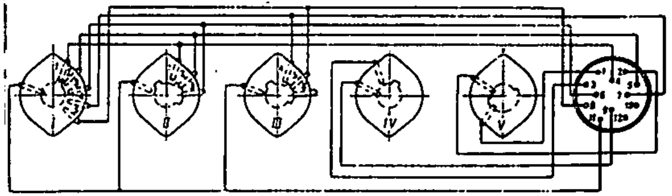

Fig. 24. Diagram of Rotary Selector Switch ПГ-7 in OFF (ВЫКЛЮЧЕНО) Position

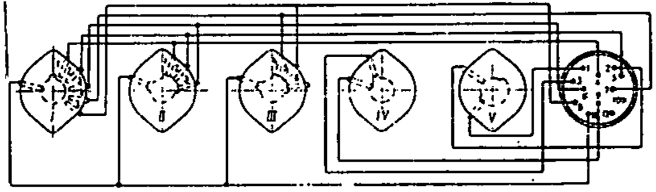

Fig. 25. Diagram of Rotary Selector Switch ПГ-7 in "Total" (Сумма) Position

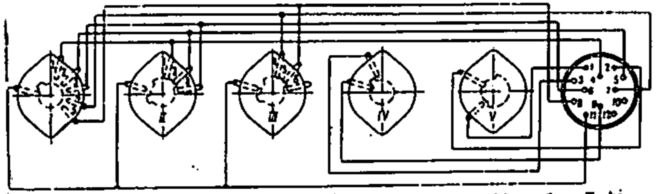

Fig. 26. Diagram of Rotary Selector Switch ПГ-7 when Checking Fuel in 1st Group Tanks

NO FOREIGN DISSEM

50X1-HUM

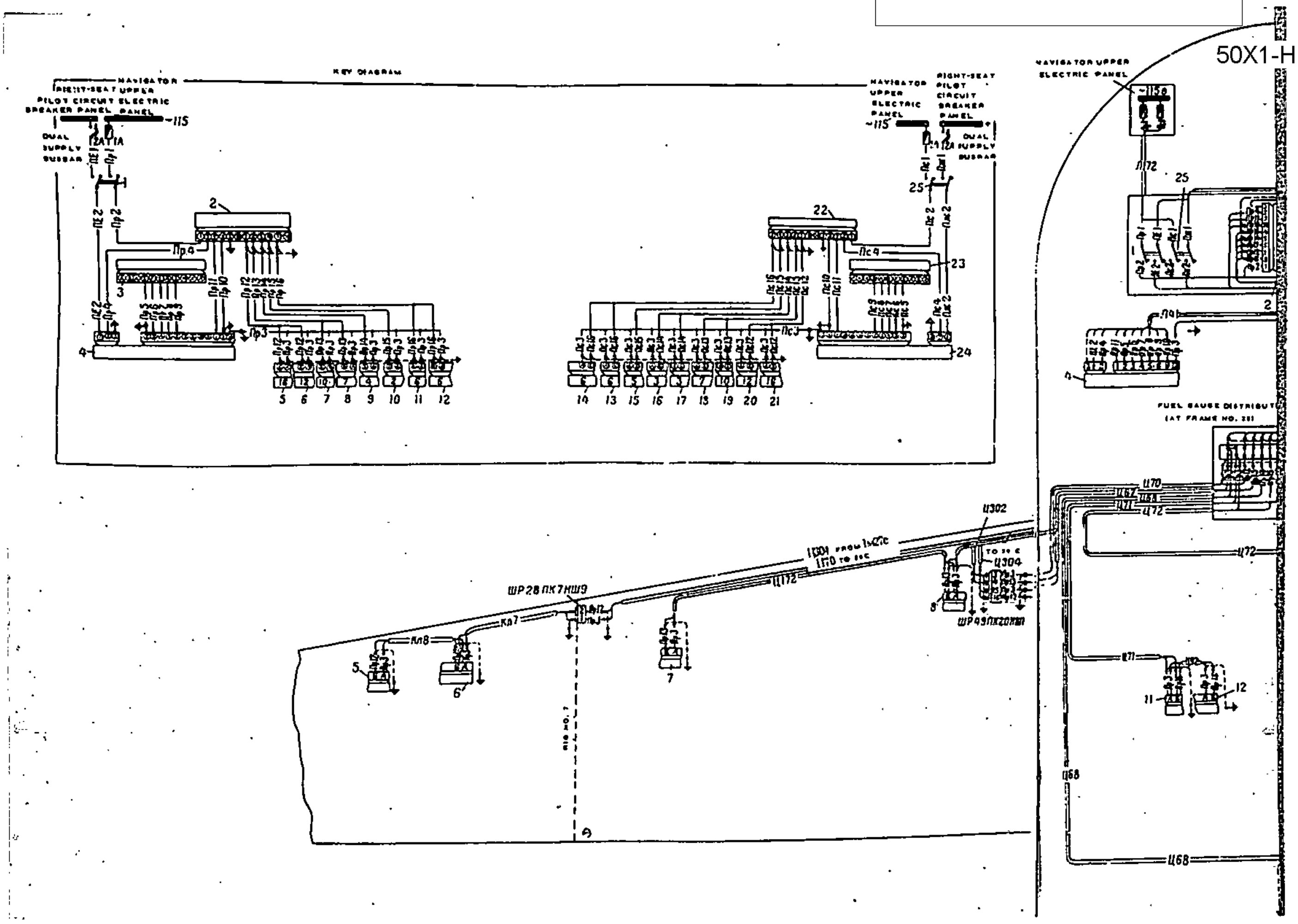

SECRET
NO FOREIGN DISSEM

[redacted]

50X1-HUM

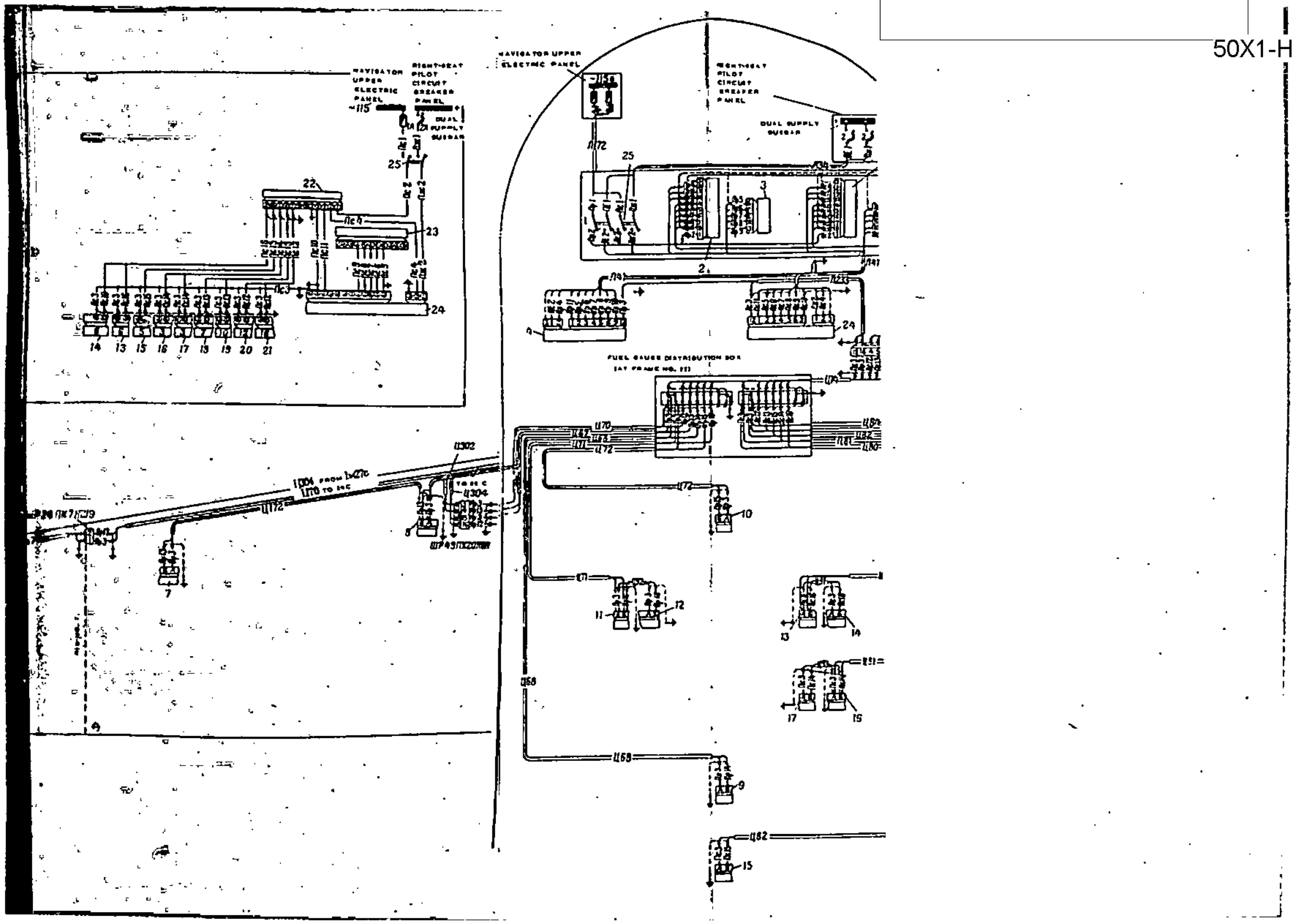

[redacted]

50X1-HUM

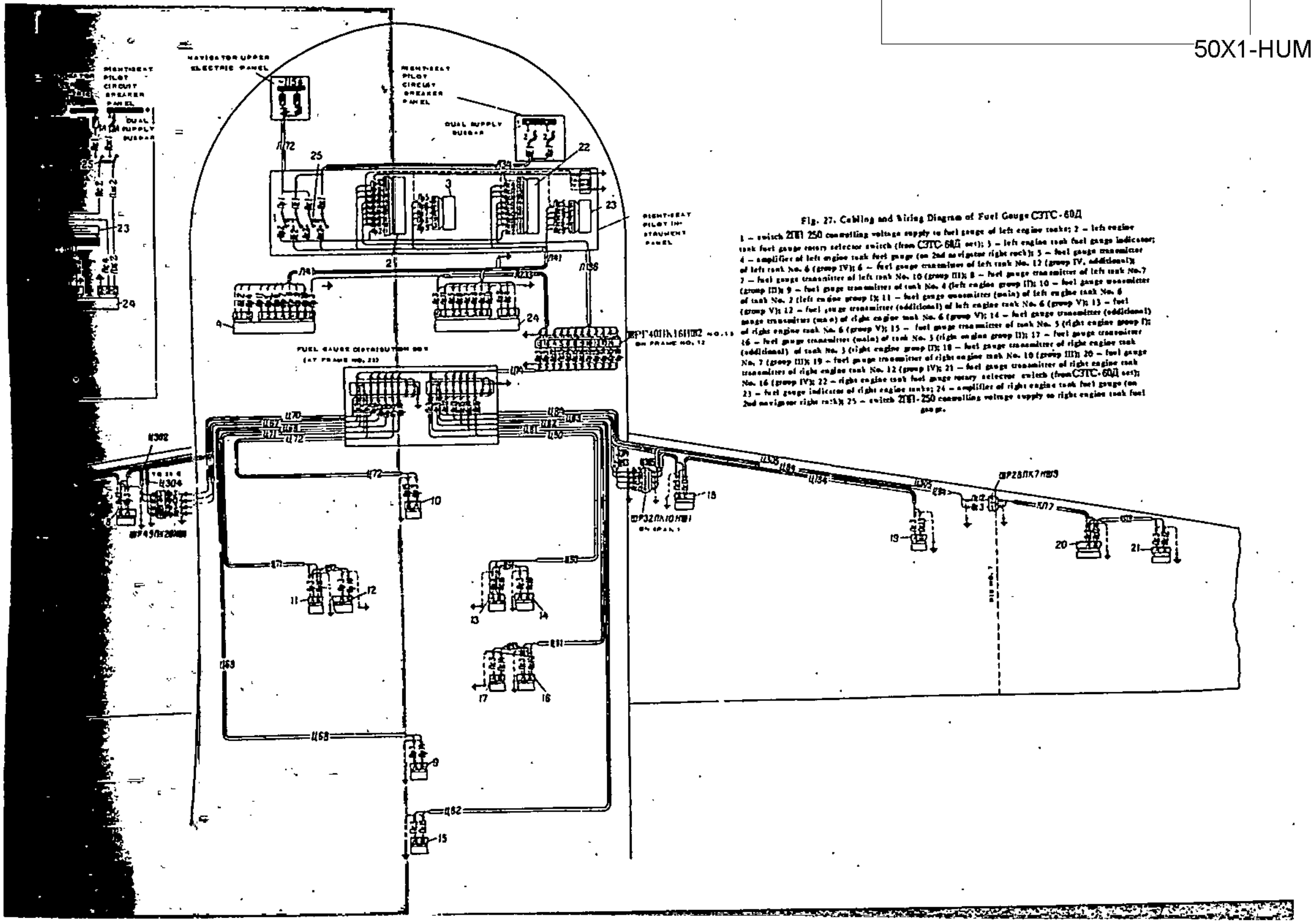

Fig. 27. Cabling and Wiring Diagram of Fuel Gauge СЗТС-60Д

1 – switch 2П1 250 controlling voltage supply to fuel gauge of left engine tanks; 2 – left engine tank fuel gauge rotary selector switch (from СЗТС-60Д set); 3 – left engine tank fuel gauge indicator; 4 – amplifier of left engine tank fuel gauge (on 2nd navigator right rack); 5 – fuel gauge transmitter of left tank No. 6 (group IV); 6 – fuel gauge transmitter of left tank No. 12 (group IV, additional); 7 – fuel gauge transmitter of left tank No. 10 (group III); 8 – fuel gauge transmitter of left tank No. 7 (group III); 9 – fuel gauge transmitter of tank No. 4 (left engine group II); 10 – fuel gauge transmitter of tank No. 2 (left engine group I); 11 – fuel gauge transmitter (main) of left engine tank No. 6 (group V); 12 – fuel gauge transmitter (additional) of left engine tank No. 6 (group V); 13 – fuel gauge transmitter (main) of right engine tank No. 6 (group V); 14 – fuel gauge transmitter (additional) of right engine tank No. 6 (group V); 15 – fuel gauge transmitter of tank No. 5 (right engine group I); 16 – fuel gauge transmitter (main) of tank No. 3 (right engine group II); 17 – fuel gauge transmitter (additional) of tank No. 3 (right engine group II); 18 – fuel gauge transmitter of right engine tank No. 7 (group III); 19 – fuel gauge transmitter of right engine tank No. 10 (group III); 20 – fuel gauge transmitter of right engine tank No. 12 (group IV); 21 – fuel gauge transmitter of right engine tank No. 16 (group IV); 22 – right engine tank fuel gauge rotary selector switch (from СЗТС-60Д set); 23 – fuel gauge indicator of right engine tanks; 24 – amplifier of right engine tank fuel gauge (on 2nd navigator right rack); 25 – switch 2П1-250 controlling voltage supply to right engine tank fuel gauge.

[redacted]

50X1-HUM

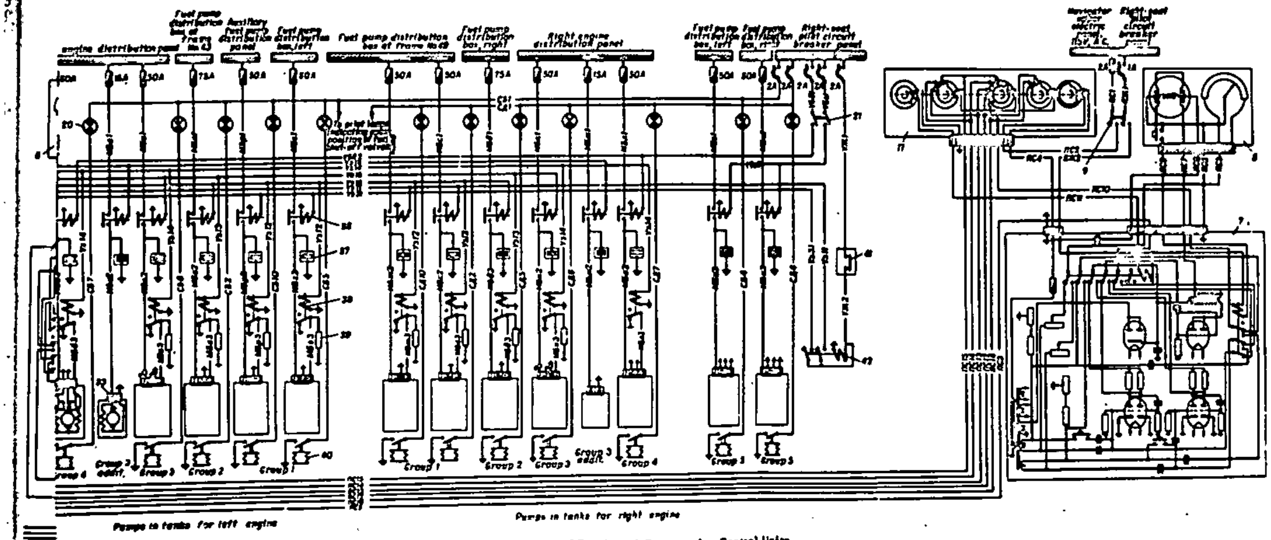

Fig. 28. Key Diagram of Fuel Gauge СЭТС-60Д and Fuel Consumption Control Units

6 – indicator of fuel gauge СЭТС-60Д; 7 – measuring equipment amplifier УТ-8Ф; 8 – zero setting check buttons КН-6А; 9 – switch 2ПП-250 for connection of measuring equipment system; 10 – relay РП-6; 11 – indicator rotary switch ПГ-7; 12 – switch 2ПП-250 for cutting-in automatic equipment system controlling fuel pumps; 13 – fuel pump control equipment amplifier УАТ-52-5; 14 – pilot lamps СЛЦ-51 (blue) – 4 pieces; 15 – pilot lamp СЛЦ-51 indicating "Fuel remaining for 15 min."(Топливо на 15 мин.); 16 – pilot lamp СЛЦ-51 indicating "Fuel remaining for 30 min."(Топливо на 30 мин.); 17 – switch В-45; 18 – manual control circuit breaker; 19 – blocking relay РП-6; 20 – fuel pump pilot lamp СЛЦ-51 – 12 pieces; 21 – stand-by pump switch 2В-45; 25 – button "Group Checking" – КВ-6А; 26 – button "Total Amount Check-Up" – КН-6А; 27 – relay РП-6; 28 – relay РВЗ – 8 pieces; 29 – relay РВЗ-45; 30 – transmitters – 17 pieces; 31 – signalling unit of automatic equipment controlling refuelling valves; 32 – signalling units of automatic fuel pump control; 33 – fuel transfer pump ПН-45Т; 34 – pump ЭЦН-Т-12 pieces; 35 – adjusting resistor; 36 – contactor К-50Д – 12 pieces; 37 – capacitor КБМ-31 – 14 pieces; 38 – blocking relay РП-2 – 10 pieces; 39 – resistor ПО-10-5 – 8 pieces; 40 – signalling unit СЛ-3ТУ – 12 pieces; 41 – pneumatically operated switch; 42 – blocking relay РП-2.

NO FOREIGN DISSEM

[redacted]

50X1-HUM

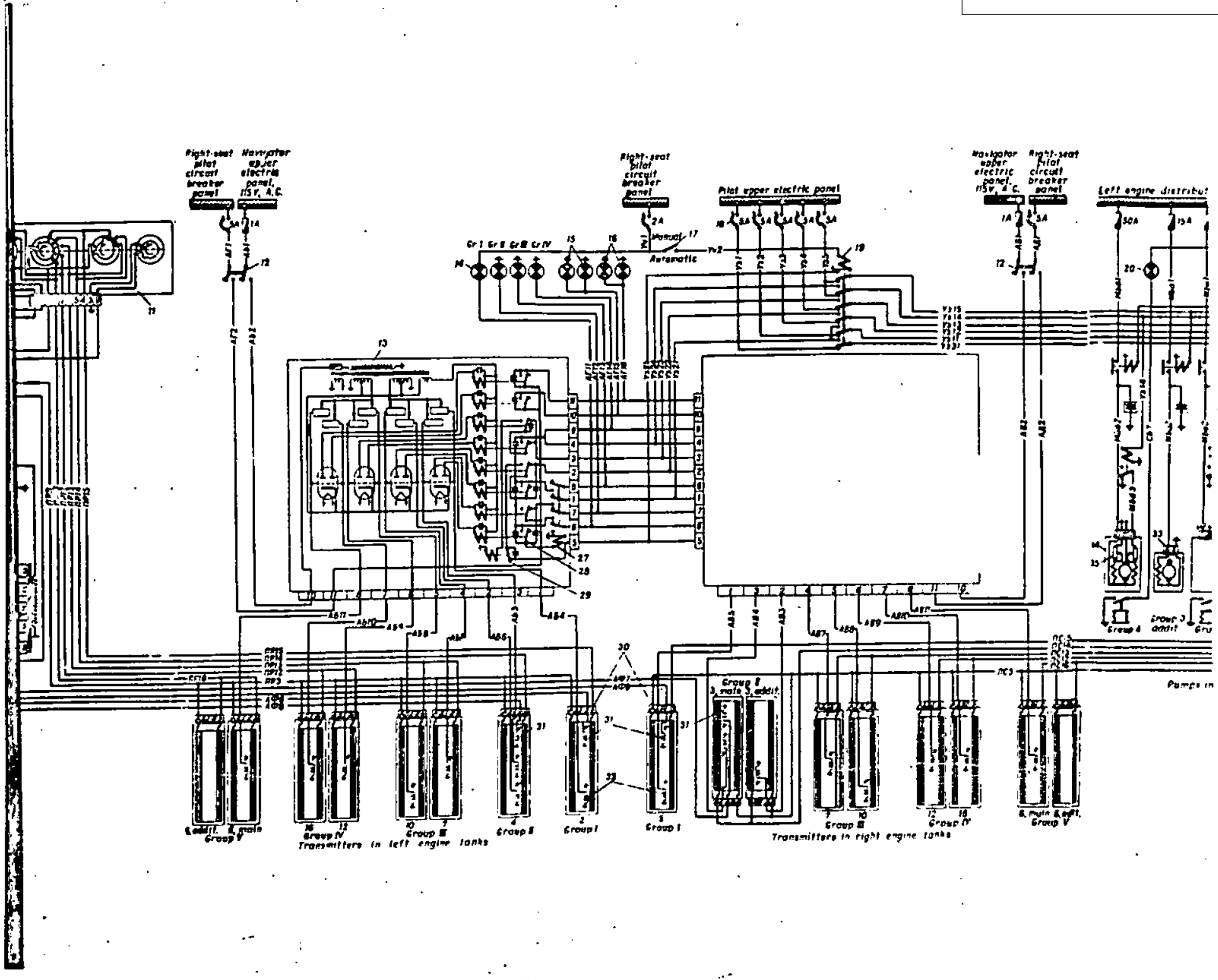

S-E-C-R-E-T
NO FOREIGN DISSEM

NO FOREIGN DISSEM

[redacted]

50X1-HUM

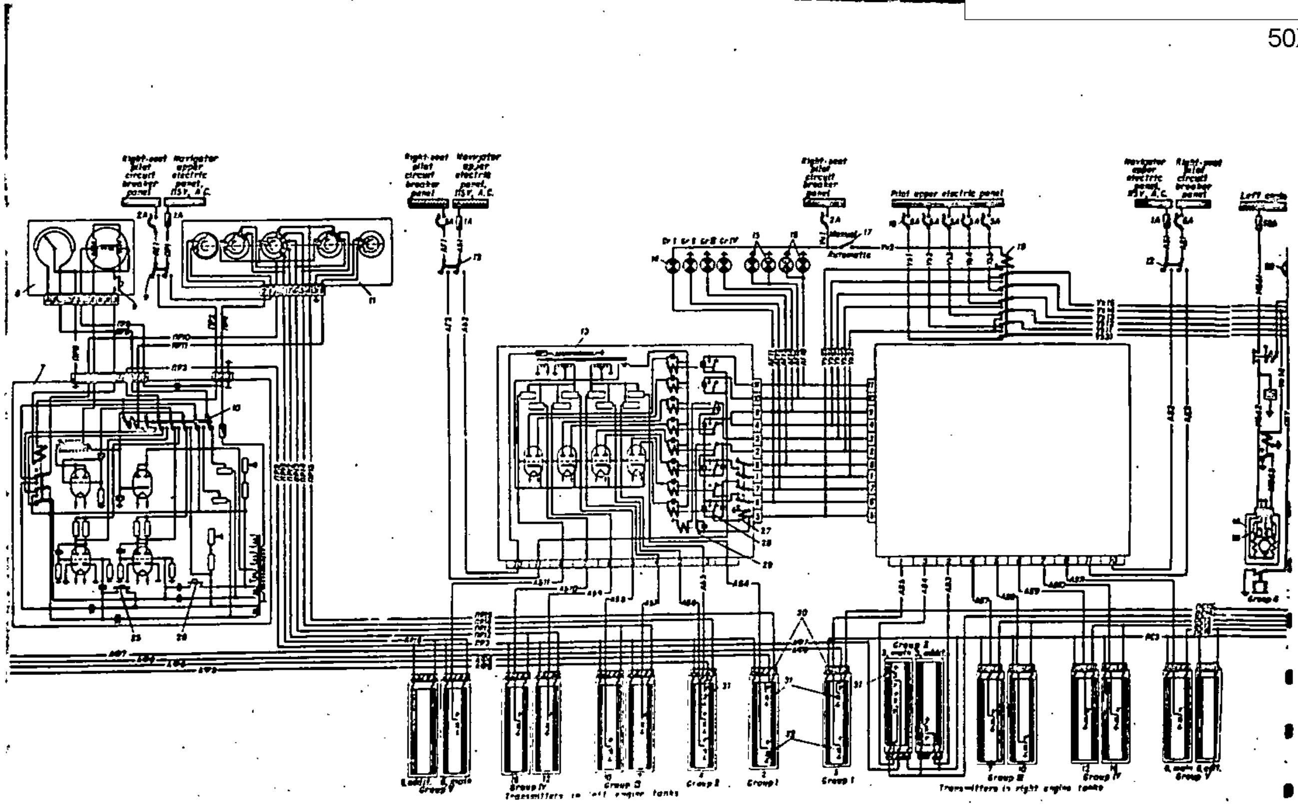

S-E-C-R-E-T
NO FOREIGN DISSEM

[redacted]

50X1-HUM

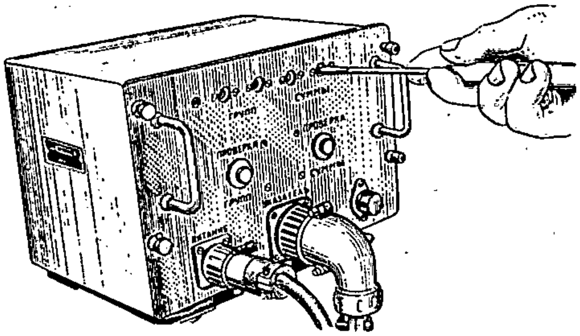

Fig. 29. Adjusting Fuel Gauge against Scale Reference Settings

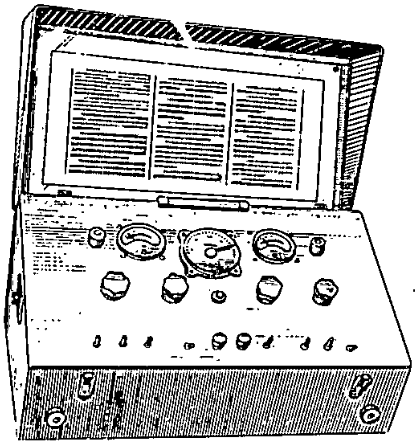

Fig. 30. Tester УПТЕ-1 with Cover Hinged Off

50X1-HUM

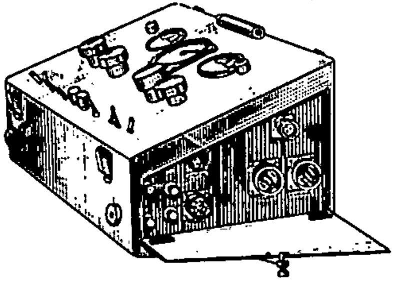

Fig. 31. View on Right Wall of Tester УПТЕ-1

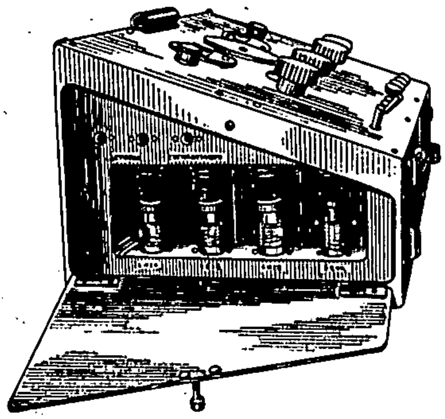

Fig. 32. View on Left Wall of Tester УПТЕ-1

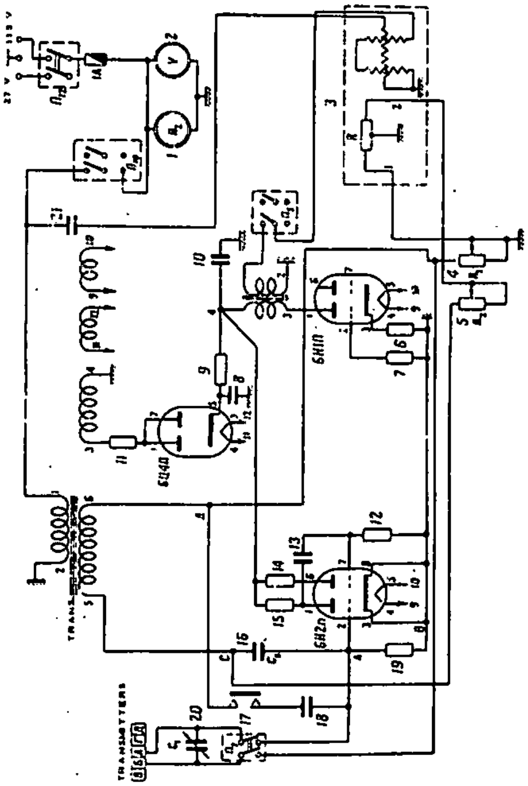

Fig. 33. УПТЕ-1 Tester Circuit for Checking Fuel Quantity Transmitters

1 – ferrodynamic frequency meter ГЧ; 2 – ferrodynamic voltmeter НФ/0-150; 3 – capacitance meter ИЕ-53; 4 and 5 – rheostat rated for 1.5 kilohms; 6 – resistor ВС-1-1-5000; 7 – resistor ВС-0.5-1-0.2; 8 and 10 – capacitor КМБГ-1-400-2 (2μF); 9 – resistor МЛТ-2-9000; 11 – resistor МЛТ-0.5-100; 12 – resistor ВС-0.5-1-0.2; 13 – capacitor consisting of КСО-5 and КСО-2 (10,000 pF); 14 and 15 – resistors ВС-0.5-1-0.2; 16 and 18 – capacitors КСО-5 (500 pF); 17 – button КВ-6А; 19 – resistor ВС-0.25-1-0.51 (510 kilohms); 20 – capacitor box; 21 – capacitor КМБГ-3-250-0.25 (0.25 μF).

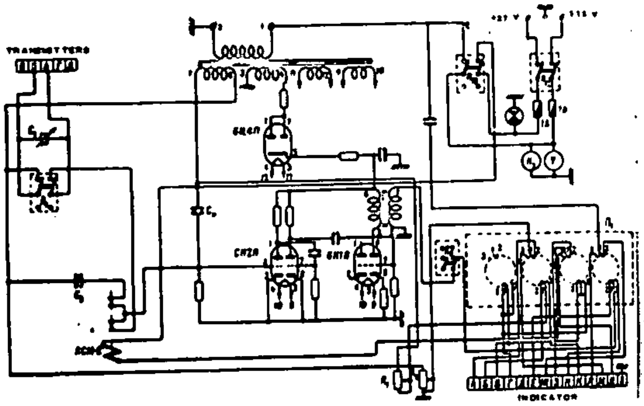

Fig. 34. УПТЕ-1 Tester Circuit for Checking Fuel Quantity Indicators

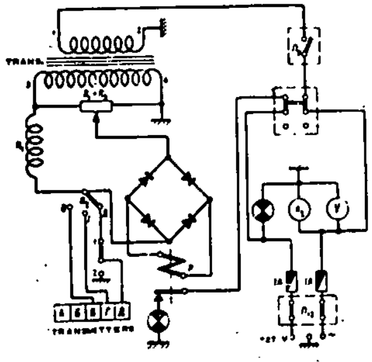

Fig. 35. УПТЕ-1 Tester Circuit for Checking Signalling Units

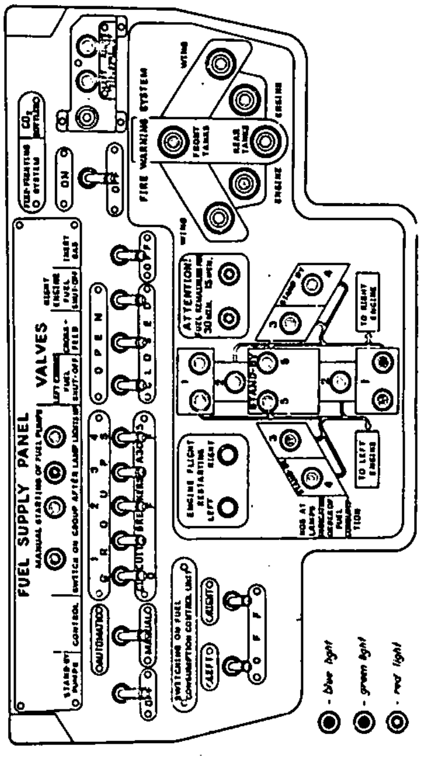

Fig. 36. Fuel Supply Panel

[redacted]

50X1-HUM

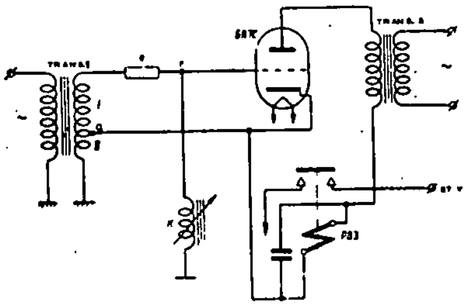

Fig. 37. Key Diagram of Unbalanced Bridge

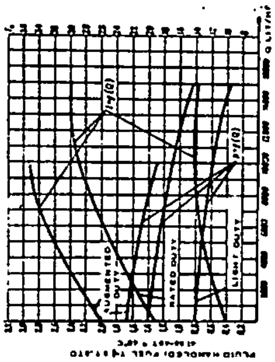

Fig. 40. Performance Curves of Pump ЭЦН-Т
p = f(Q) and I = f(Q)

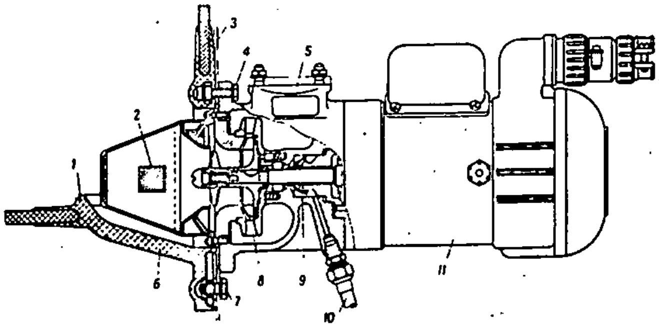

Fig. 38. Attachment of Pump ЭЦН-Т to Fuel Tank

1 — flange collar; 2 — gauze ; 3 — tank container; 4 — bolt fastening pump to tank flange; 5 — outlet pipe connection; 6 — tank flange; 7 — bolt securing flange to frame; 8 — pump impeller; 9 — slinger; 10 — drain pipe; 11 — electric motor MB-650T.

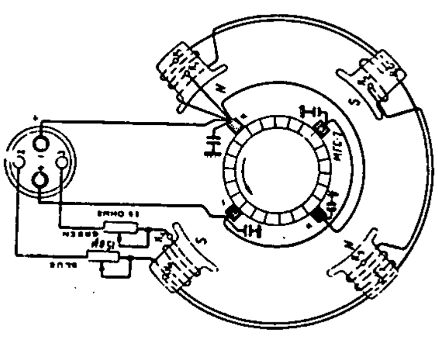

Fig. 39. Diagram of Electric Motor MB-650T (Commutator End View)

H_1, H_2, H_3, and H_4 — winding ins; K_1, K_2, K_3, and K_4 — winding outs; 1, 2, 3, 4 — plug connector terminals.

Note: Resistors rated for 15 ohms serve for factory adjustment of electric motor speed.

[redacted]

50X1-HUM

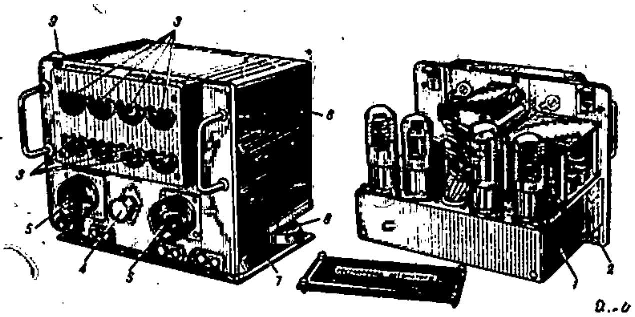

Fig. 41. Fuel Consumption Control Unit Amplifier (in and without Housing)

1 – amplifier mounting frame; 2 – front panel; 3 – rheostats rated for 3 kilohms; 4 – safety fuse; 5 – twelve-pin plug connectors; 6 – amplifier housing; 7 – bed plate; 8 – shock absorbing frame; 9 – negative wire.

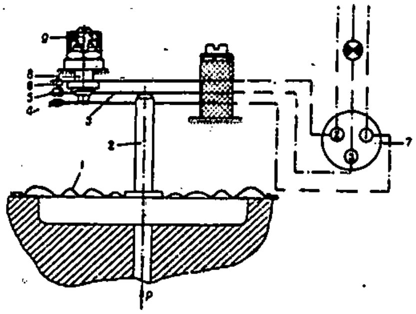

Fig. 42. Key Diagram of Pressure Signalling Unit
СД-3ТУ

1 – membrane; 2 – rigid centre boss; 3 – contact spring; 4, 5, and 6 – contacts; 7 – connector; 8 and 9 – screws.

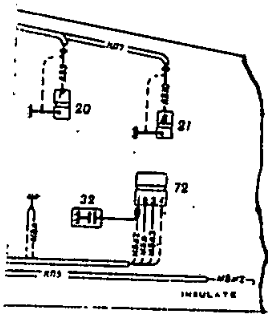

SECRET
NO FOREIGN DISSEM

[redacted]

50X1-HUM

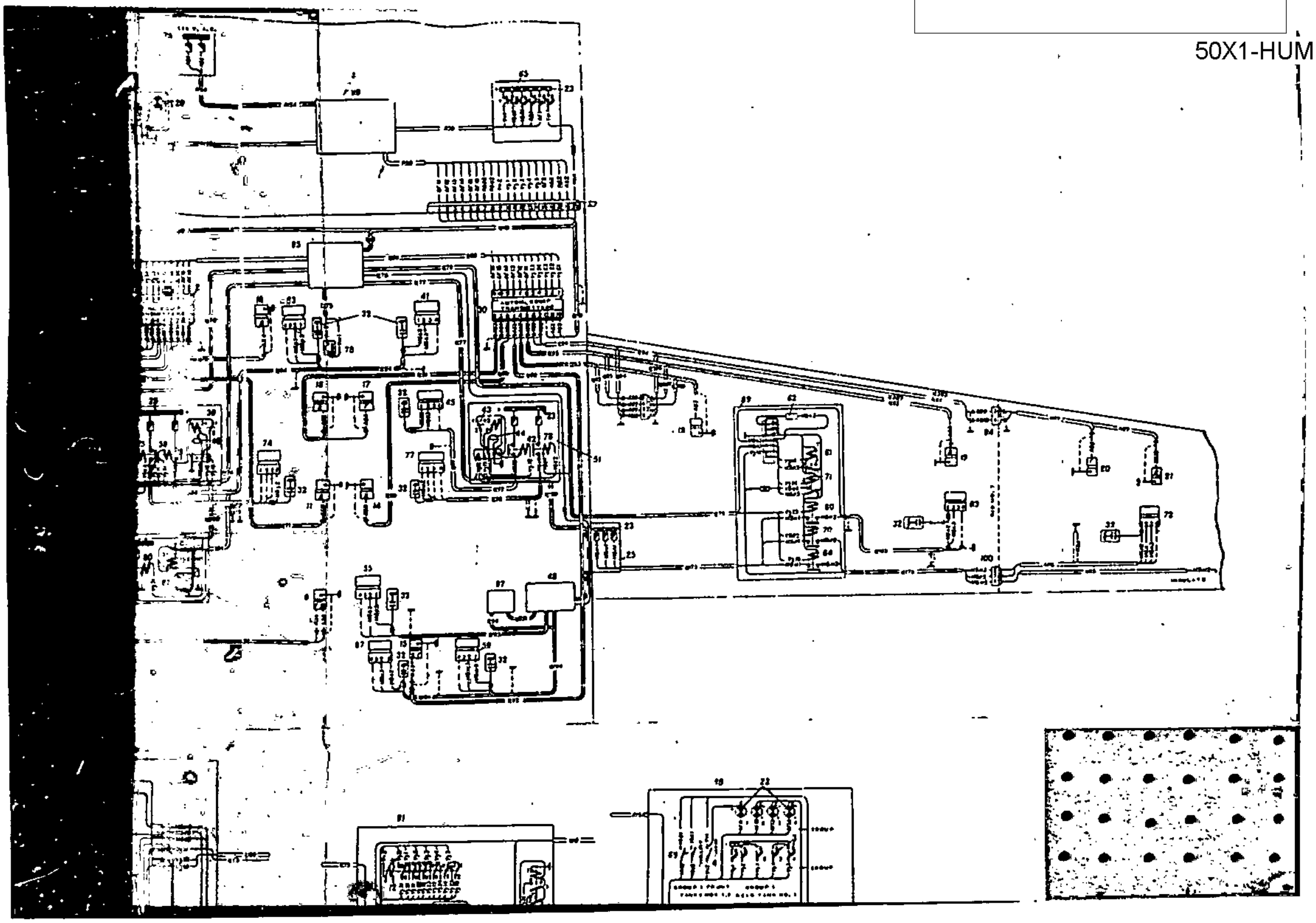

SECRET
NO FOREIGN DISSEM

[redacted]

50X1-HUM

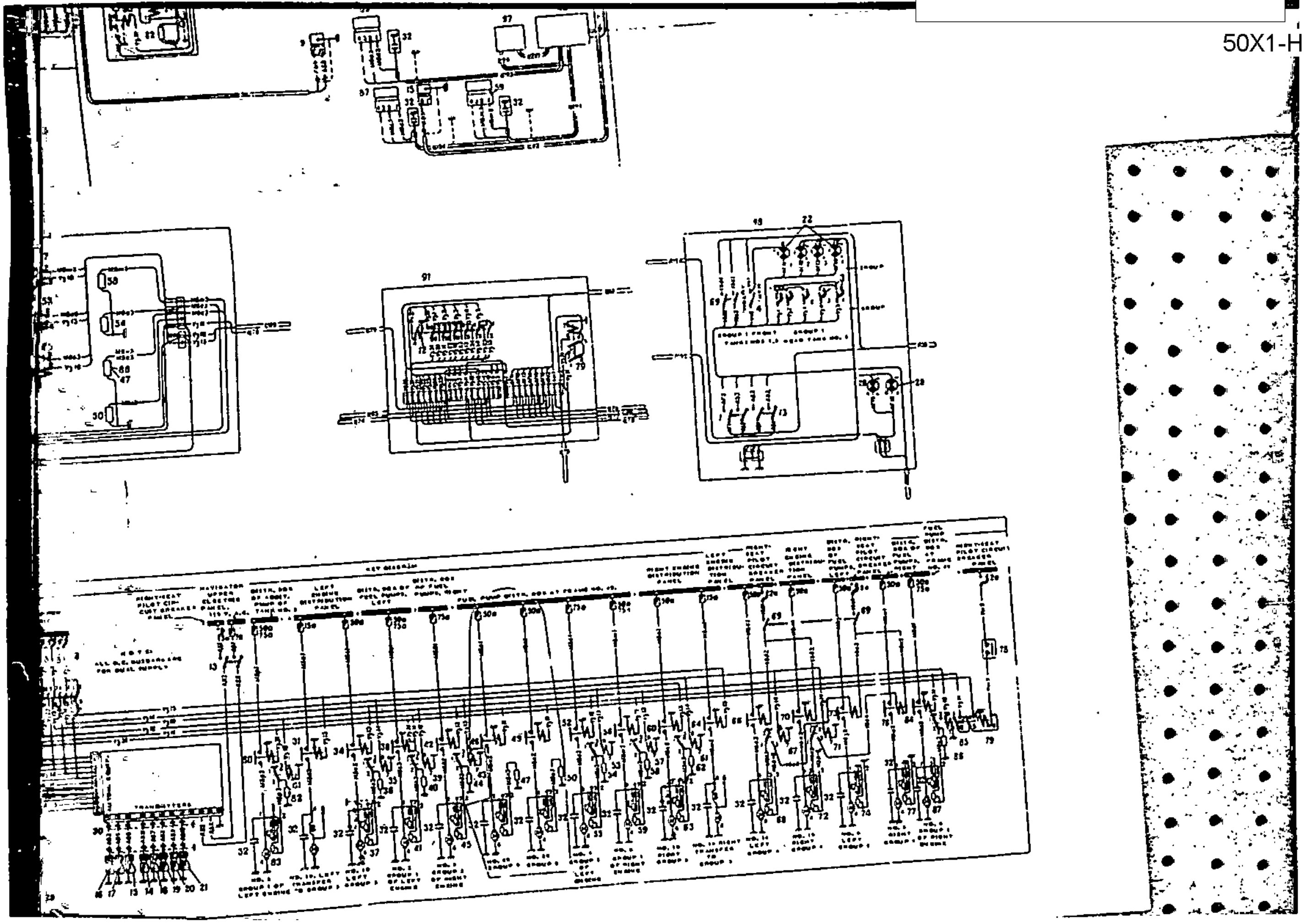

[redacted]

50X1-HUM

SECRET
NO FOREIGN DISSEM

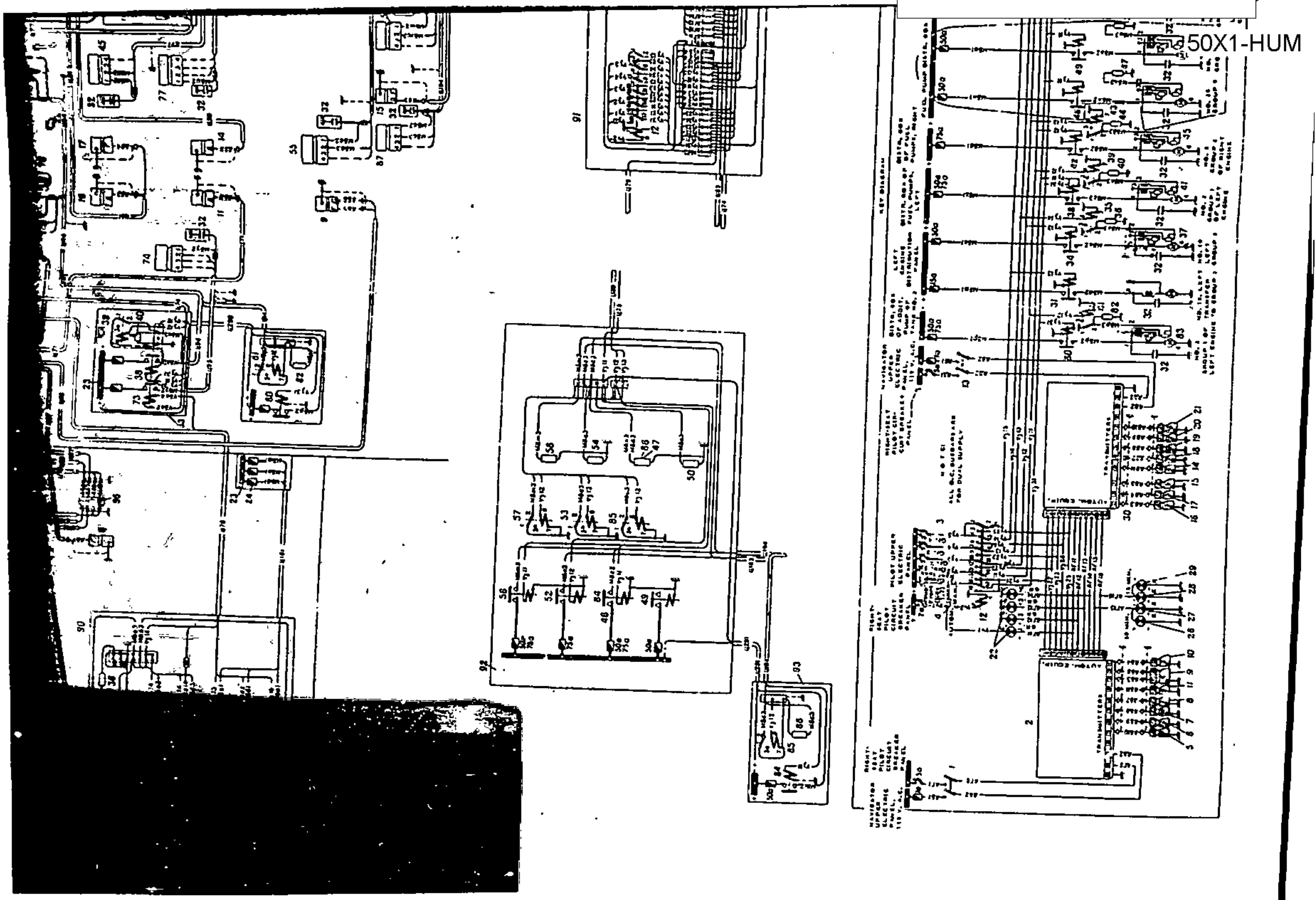

SECRET
NO FOREIGN DISSEM

[redacted]

50X1-HUM

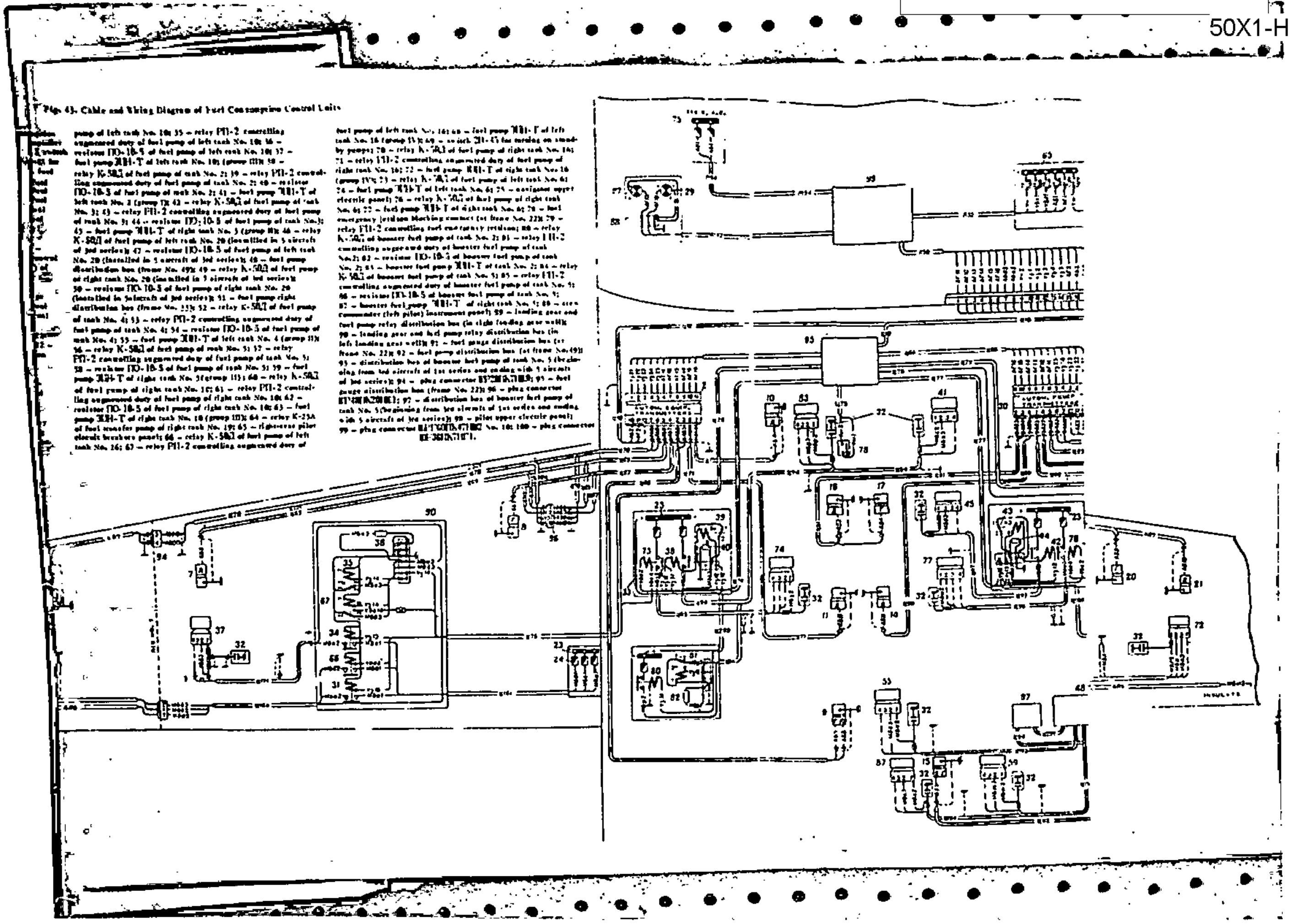

Fig. 43. Cable and Wiring Diagram of Fuel Consumption Control Units

pump of left tank No. 10; 35 – relay РП-2 controlling augmented duty of fuel pump of left tank No. 10; 36 – resistor ПО-10-5 of fuel pump of left tank No. 10; 37 – fuel pump ЭЦН-Т of left tank No. 10; (group III); 38 – relay К-50Д of fuel pump of tank No. 2; 39 – relay РП-2 controlling augmented duty of fuel pump of tank No. 2; 40 – resistor ПО-10-5 of fuel pump of tank No. 2; 41 – fuel pump ЭЦН-Т of left tank No. 2 (group I); 42 – relay К-50Д of fuel pump of tank No. 3; 43 – relay РП-2 controlling augmented duty of fuel pump of tank No. 3; 44 – resistor ПО-10-5 of fuel pump of tank No. 3; 45 – fuel pump ЭЦН-Т of right tank No. 3 (group II); 46 – relay К-50Д of fuel pump of left tank No. 20 (installed in 5 aircraft of 3rd series); 47 – resistor ПО-10-5 of fuel pump of left tank No. 20 (installed in 5 aircraft of 3rd series); 48 – fuel pump distribution box (frame No. 49); 49 – relay К-50Д of fuel pump of right tank No. 20 (installed in 5 aircraft of 3rd series); 50 – resistor ПО-10-5 of fuel pump of right tank No. 20 (installed in 5 aircraft of 3rd series); 51 – fuel pump right distribution box (frame No. 23); 52 – relay К-50Д of fuel pump of tank No. 4; 53 – relay РП-2 controlling augmented duty of fuel pump of tank No. 4; 54 – resistor ПО-10-5 of fuel pump of tank No. 4; 55 – fuel pump ЭЦН-Т of left tank No. 4 (group II); 56 – relay К-50Д of fuel pump of tank No. 5; 57 – relay РП-2 controlling augmented duty of fuel pump of tank No. 5; 58 – resistor ПО-10-5 of fuel pump of tank No. 5; 59 – fuel pump ЭЦН-Т of right tank No. 5 (group II); 60 – relay К-50Д of fuel pump of right tank No. 10; 61 – relay РП-2 controlling augmented duty of fuel pump of right tank No. 10; 62 – resistor ПО-10-5 of fuel pump of right tank No. 10; 63 – fuel pump ЭЦН-Т of right tank No. 10 (group III); 64 – relay К-25А of fuel transfer pump of right tank No. 19; 65 – right-seat pilot circuit breakers panel; 66 – relay К-50Д of fuel pump of left tank No. 16; 67 – relay РП-2 controlling augmented duty of fuel pump of left tank No. 16; 68 – fuel pump ЭЦН-Т of left tank No. 16 (group IV); 69 – switch 2П-45 for turning on stand-by pumps; 70 – relay К-50Д of fuel pump of right tank No. 16; 71 – relay РП-2 controlling augmented duty of fuel pump of right tank No. 16; 72 – fuel pump ЭЦН-Т of right tank No. 16 (group IV); 73 – relay К-50Д of fuel pump of left tank No. 6; 74 – fuel pump ЭЦН-Т of left tank No. 6; 75 – navigator upper electric panel; 76 – relay К-50Д of fuel pump of right tank No. 6; 77 – fuel pump ЭЦН-Т of right tank No. 6; 78 – fuel emergency jettison blocking contact (at frame No. 22); 79 – relay РП-2 controlling fuel emergency jettison; 80 – relay К-50Д of booster fuel pump of tank No. 2; 81 – relay РП-2 controlling augmented duty of booster fuel pump of tank No. 2; 82 – resistor ПО-10-5 of booster fuel pump of tank No. 2; 83 – booster fuel pump ЭЦН-Т of tank No. 2; 84 – relay К-50Д of booster fuel pump of tank No. 5; 85 – relay РП-2 controlling augmented duty of booster fuel pump of tank No. 5; 86 – resistor ПО-10-5 of booster fuel pump of tank No. 5; 87 – booster fuel pump ЭЦН-Т of right tank No. 5; 88 – crew commander (left pilot) instrument panel; 89 – landing gear and fuel pump relay distribution box (in right landing gear well); 90 – landing gear and fuel pump relay distribution box (in left landing gear well); 91 – fuel gauge distribution box (at frame No. 22); 92 – fuel pump distribution box (at frame No. 49); 93 – distribution box of booster fuel pump of tank No. 5 (beginning from 3rd aircraft of 1st series and ending with 5 aircraft of 3rd series); 94 – plug connector [illegible]; 95 – fuel gauge distribution box (frame No. 22); 96 – plug connector [illegible]; 97 – distribution box of booster fuel pump of tank No. 5 (beginning from 3rd aircraft of 1st series and ending with 5 aircraft of 3rd series); 98 – pilot upper electric panel; 99 – plug connector [illegible] No. 10; 100 – plug connector [illegible].

[redacted]

50X1-HUM

Fig. 43. Cable and Wiring Diagram of Fuel Consumption Control Units

1 – switch 2ПП-250 for left amplifier of fuel consumption control unit; 2 – fuel consumption control unit left amplifier УАТ-52-5 (frame No. 22); 3 – circuit breaker АЗС-5 switch for manual control of fuel consumption; 4 – switch В-45 for fuel consumption control (automatic – manual); 5 – fuel gauge transmitter of left tank No. 16 (group IV); 6 – fuel gauge transmitter of left tank No. 12 (group IV); 7 – fuel gauge transmitter of left tank No. 10 (group III); 8 – fuel gauge transmitter of left tank No. 7 (group III); 9 – fuel gauge transmitter of left tank No. 4 (group II); 10 – fuel gauge transmitter of left tank No. 2 (group I); 11 – fuel gauge transmitter (main) of left tank No. 6 (group V); 12 – fuel consumption control relay РП-6 (automatic – manual); 13 – switch 2ПП-250 for fuel consumption control unit right amplifier; 14 – fuel gauge transmitter (main) of right tank No. 6 (group V); 15 – fuel gauge transmitter of right tank No. 5 (group I); 16 – fuel gauge transmitter (additional) of left tank No. 3 (group II); 17 – fuel gauge transmitter (main) of right tank No. 3 (group II); 18 – fuel gauge transmitter of right tank No. 7 (group III); 19 – fuel gauge transmitter of right tank No. 10 (group III); 20 – fuel gauge transmitter of right tank No. 12 (group IV); 21 – fuel gauge transmitter of right tank No. 16 (group IV); 22 – pilot lamps СЛЦ-51 indicating order of fuel consumption from individual tank groups; 23 – double feed bus bar; 24 – left engine distribution panel; 25 – right engine distribution panel; 26 and 27 – pilot lamps СЛЦ-51 indicating that fuel reserve is for 30 min. of flight; 28 and 29 – pilot lamps СЛЦ-51 indicating that fuel reserve is for 15 min. of flight; 30 – fuel consumption control unit right amplifier УАТ-52-5 (frame No. 22); 31 – relay K-25A controlling fuel transfer pump of left tank No. 19; 32 – capacitor КБМ-31; 33 – fuel pump left distribution box (frame No. 33); 34 – relay К-50Д controlling fuel pump of left tank No. 10; 35 – relay РП-2 controlling augmented duty of fuel pump of left tank No. 10; 36 – resistor ПО-10-5 of fuel pump of left tank No. 10; 37 – fuel pump ЭЦН-Т of left tank No. 10; (group III); 38 – relay К-50Д of fuel pump of tank No. 2; 39 – relay РП-2 controlling augmented duty of fuel pump of tank No. 2; 40 – resistor ПО-10-5 of fuel pump of tank No. 2; 41 – fuel pump ЭЦН-Т of left tank No. 2 (group I); 42 – relay К-50Д of fuel pump of tank No. 3; 43 – relay РП-2 controlling augmented duty of fuel pump of tank No. 3; 44 – resistor ПО-10-5 of fuel pump of tank No. 3; 45 – fuel pump ЭЦН-Т of right tank No. 3 (group II); 46 – relay К-50Д of fuel pump of left tank No. 20 (installed in 5 aircraft of 3rd series); 47 – resistor ПО-10-5 of fuel pump of left tank No. 20 (installed in 5 aircraft of 3rd series); 48 – fuel pump distribution box (frame No. 49); 49 – relay К-50Д of fuel pump of right tank No. 20 (installed in 5 aircraft of 3rd series); 50 – resistor ПО-10-5 of fuel pump of right tank No. 20 (installed in 5aircraft of 3rd series); 51 – fuel pump right distribution box (frame No. 33); 52 – relay К-50Д of fuel pump of tank No. 4; 53 – relay РП-2 controlling augmented duty of fuel pump of tank No. 4; 54 – resistor ПО-10-5 of fuel pump of tank No. 4; 55 – fuel pump ЭЦН-Т of left tank No. 4 (group II); 56 – relay К-50Д of fuel pump of tank No. 5; 57 – relay РП-2 controlling augmented duty of fuel pump of tank No. 5; 58 – resistor ПО-10-5 of fuel pump of tank No. 5; 59 – fuel pump ЭЦН-Т of right tank No. 5 (group I); 60 – relay К-50Д of fuel pump of right tank No. 10; 61 – relay РП-2 controlling augmented duty of fuel pump of right tank No. 10; 62 – resistor ПО-10-5 of fuel pump of right tank No. 10; 63 – fuel pump ЭЦН-Т of right tank No. 10 (group III); 64 – relay K-25A of fuel transfer pump of right tank No. 19; 65 – right-seat pilot circuit breakers panel; 66 – relay К-50Д of fuel pump of left tank No. 16; 67 – relay РП-2 controlling augmented duty of fuel pump of left tank No. 16; 68 – fuel pump ЭЦН-Т of left tank No. 16 (group IV); 69 – switch 2В-45 for turning on stand-by pumps; 70 – relay К-50Д of fuel pump of right tank No. 16; 71 – relay РП-2 controlling augmented duty of fuel pump of right tank No. 16; 72 – fuel pump ЭЦН-Т of right tank No. 16 (group IV); 73 – relay К-50Д of fuel pump of left tank No. 6; 74 – fuel pump ЭЦН-Т of left tank No. 6; 75 – navigator upper electric panel; 76 – relay К-50Д of fuel pump of right tank No. 6; 77 – fuel pump ЭЦН-Т of right tank No. 6; 78 – fuel emergency jettison blocking contact (at frame No. 22); 79 – relay РП-2 controlling fuel emergency jettison; 80 – relay К-50Д of booster fuel pump of tank No. 2; 81 – relay РП-2 controlling augmented duty of booster fuel pump of tank No. 2; 82 – resistor ПО-10-5 of booster fuel pump of tank No. 2; 83 – booster fuel pump ЭЦН-Т of tank No. 2; 84 – relay К-50Д of booster fuel pump of tank No. 5; 85 – relay РП-2 controlling augmented duty of booster fuel pump of tank No. 5; 86 – resistor ПО-10-5 of booster fuel pump of tank No. 5; 87 – booster fuel pump ЭЦН-Т of right tank No. 5; 88 – crew commander (left pilot) instrument panel; 89 – landing gear and fuel pump relay distribution box (in right landing gear well); 90 – landing gear and fuel pump relay distribution box (in left landing gear well); 91 – fuel gauge distribution box (at frame No. 22); 92 – fuel pump distribution box (at frame No. 49); 93 – distribution box of booster fuel pump of tank No. 5 (beginning from 3rd aircraft of 1st series and ending with 5 aircraft of 3rd series); 94 – plug connector ШР28ПК7НШ9; 95 – fuel gauge distribution box (frame No. 22); 96 – plug connector ШР48ПК20НШ1; 97 – distribution box of booster fuel pump of tank No. 5 (beginning from 3rd aircraft of 1st series and ending with 5 aircraft of 3rd series); 98 – pilot upper electric panel; 99 – plug connector ШР60ПК47НШ2 No. 10; 100 – plug connector ШР36ПК7НГ1.

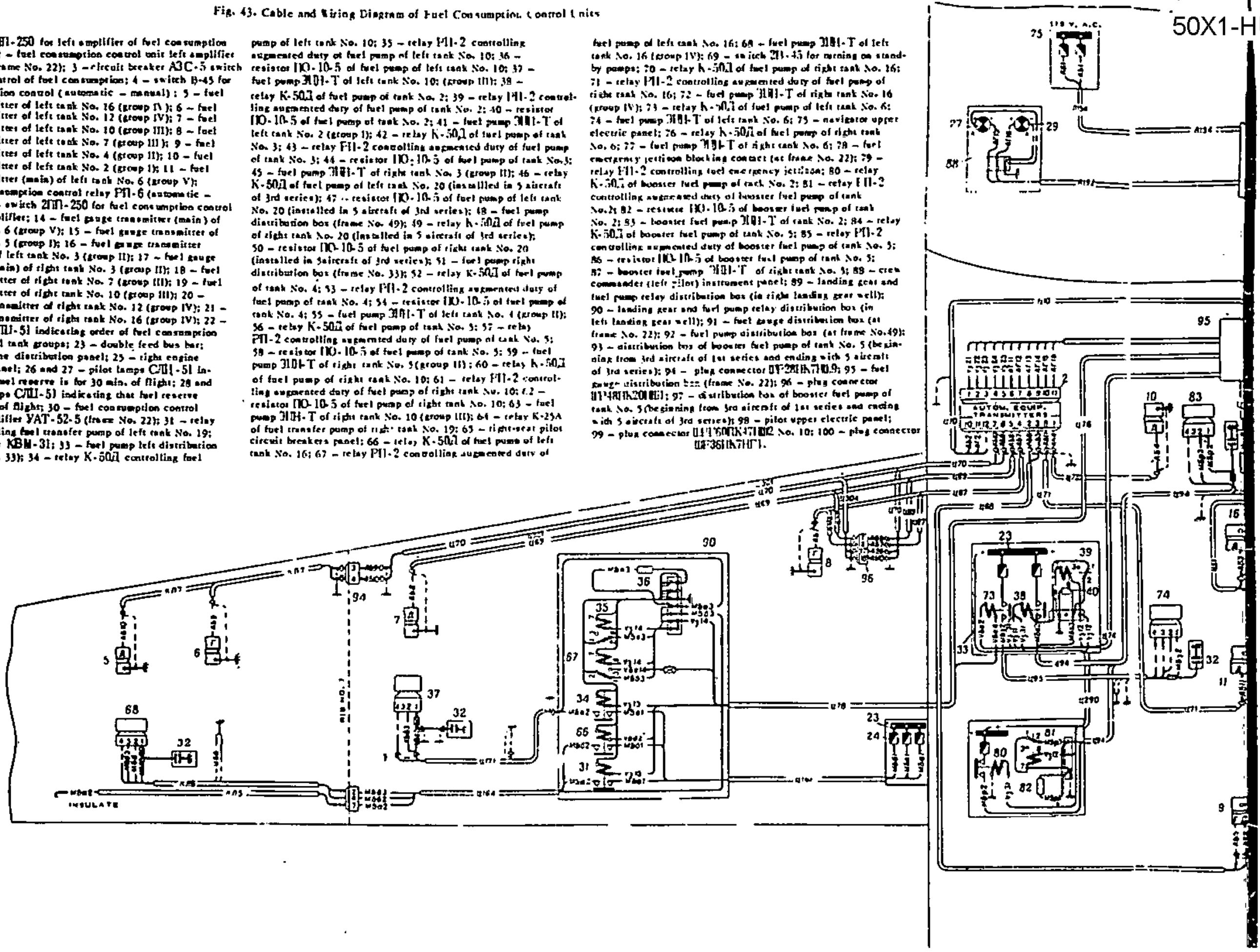

50X1-HUM

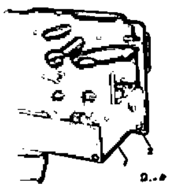

...d without Burning)

...and for 3 blisters; 4 – safety ... bed plant; 8 – shock absorb-

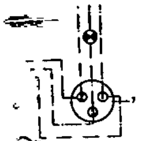

...e Signalling Unit

...e, 3 – contact springs; ...g, 8 and 9 – screws.

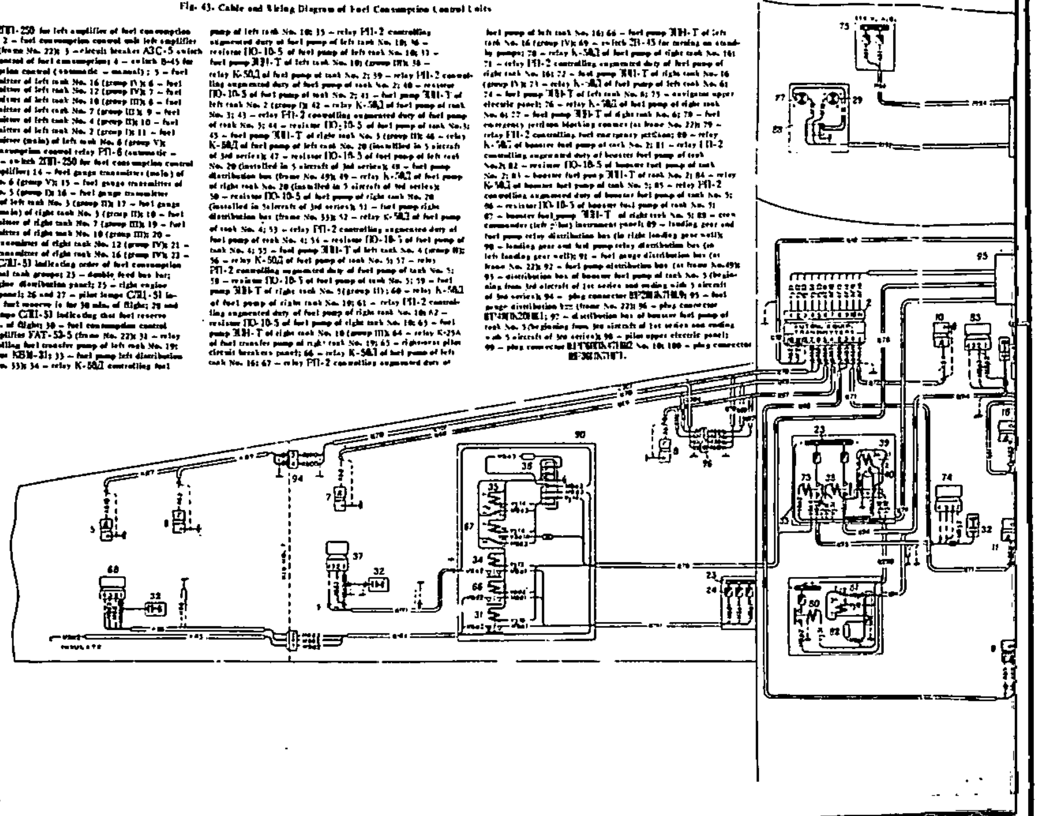

Fig. 43. Cable and Wiring Diagram of Fuel Consumption Control Units

1 – switch 2ПП-250 for left amplifier of fuel consumption control unit; 2 – fuel consumption control unit left amplifier УАТ-52-5 (frame No. 22); 3 – circuit breaker АЗС-5 switch for manual control of fuel consumption; 4 – switch В-45 for fuel consumption control (automatic – manual); 5 – fuel gauge transmitter of left tank No. 16 (group I); 6 – fuel gauge transmitter of left tank No. 12 (group IV); 7 – fuel gauge transmitter of left tank No. 10 (group III); 8 – fuel gauge transmitter of left tank No. 7 (group III); 9 – fuel gauge transmitter of left tank No. 4 (group II); 10 – fuel gauge transmitter of left tank No. 2 (group I); 11 – fuel gauge transmitter (main) of left tank No. 6 (group V); 12 – fuel consumption control relay РП-6 (automatic – manual); 13 – switch 2ПП-250 for fuel consumption control unit right amplifier; 14 – fuel gauge transmitter (main) of right tank No. 6 (group V); 15 – fuel gauge transmitter of right tank No. 5 (group I); 16 – fuel gauge transmitter (additional) of left tank No. 3 (group II); 17 – fuel gauge transmitter (main) of right tank No. 3 (group II); 18 – fuel gauge transmitter of right tank No. 7 (group III); 19 – fuel gauge transmitter of right tank No. 10 (group III); 20 – fuel gauge transmitter of right tank No. 12 (group IV); 21 – fuel gauge transmitter of right tank No. 16 (group IV); 22 – pilot lamps СЛЦ-51 indicating order of fuel consumption from individual tank groups; 23 – double feed bus bar; 24 – left engine distribution panel; 25 – right engine distribution panel; 26 and 27 – pilot lamps СЛЦ-51 indicating that fuel reserve is for 30 min. of flight; 28 and 29 – pilot lamps СЛЦ-51 indicating that fuel reserve is for 15 min. of flight; 30 – fuel consumption control unit right amplifier УАТ-52-5 (frame No. 22); 31 – relay К-23А controlling fuel transfer pump of left tank No. 19; 32 – capacitor КБМ-31; 33 – fuel pump left distribution box (frame No. 33); 34 – relay К-50Д controlling fuel pump of left tank No. 10; 35 – relay РП-2 controlling augmented duty of fuel pump of left tank No. 10; 36 – resistor ПО-10-5 of fuel pump of left tank No. 10; 37 – fuel pump ЭЦН-Т of left tank No. 10 (group III); 38 – relay К-50Д of fuel pump of tank No. 2; 39 – relay РП-2 controlling augmented duty of fuel pump of tank No. 2; 40 – resistor ПО-10-5 of fuel pump of tank No. 2; 41 – fuel pump ЭЦН-Т of left tank No. 2 (group I); 42 – relay К-50Д of fuel pump of tank No. 3; 43 – relay РП-2 controlling augmented duty of fuel pump of tank No. 3; 44 – resistor ПО-10-5 of fuel pump of tank No. 3; 45 – fuel pump ЭЦН-Т of right tank No. 3 (group II); 46 – relay К-50Д of fuel pump of left tank No. 20 (installed in 5 aircraft of 3rd series); 47 – resistor ПО-10-5 of fuel pump of left tank No. 20 (installed in 5 aircraft of 3rd series); 48 – fuel pump distribution box (frame No. 49); 49 – relay К-50Д of fuel pump of right tank No. 20 (installed in 5 aircraft of 3rd series); 50 – resistor ПО-10-5 of fuel pump of right tank No. 20 (installed in 5 aircraft of 3rd series); 51 – fuel pump right distribution box (frame No. 33); 52 – relay К-50Д of fuel pump of tank No. 4; 53 – relay РП-2 controlling augmented duty of fuel pump of tank No. 4; 54 – resistor ПО-10-5 of fuel pump of tank No. 4; 55 – fuel pump ЭЦН-Т of left tank No. 4 (group II); 56 – relay К-50Д of fuel pump of tank No. 5; 57 – relay РП-2 controlling augmented duty of fuel pump of tank No. 5; 58 – resistor ПО-10-5 of fuel pump of tank No. 5; 59 – fuel pump ЭЦН-Т of right tank No. 5 (group II); 60 – relay К-50Д of fuel pump of right tank No. 10; 61 – relay РП-2 controlling augmented duty of fuel pump of right tank No. 10; 62 – resistor ПО-10-5 of fuel pump of right tank No. 10; 63 – fuel pump ЭЦН-Т of right tank No. 10 (group III); 64 – relay К-23А of fuel transfer pump of right tank No. 19; 65 – right-hand pilot circuit breakers panel; 66 – relay К-50Д of fuel pump of left tank No. 16; 67 – relay РП-2 controlling augmented duty of fuel pump of left tank No. 16; 68 – fuel pump ЭЦН-Т of left tank No. 16 (group IV); 69 – switch 2П-45 for turning on stand-by pumps; 70 – relay К-50Д of fuel pump of right tank No. 16; 71 – relay РП-2 controlling augmented duty of fuel pump of right tank No. 16; 72 – fuel pump ЭЦН-Т of right tank No. 16 (group IV); 73 – relay К-50Д of fuel pump of left tank No. 6; 74 – fuel pump ЭЦН-Т of left tank No. 6; 75 – navigator upper electric panel; 76 – relay К-50Д of fuel pump of right tank No. 6; 77 – fuel pump ЭЦН-Т of right tank No. 6; 78 – fuel emergency jettison blocking connector (at frame No. 22); 79 – relay РП-2 controlling fuel emergency jettison; 80 – relay К-50Д of booster fuel pump of tank No. 2; 81 – relay РП-2 controlling augmented duty of booster fuel pump of tank No. 2; 82 – resistor ПО-10-5 of booster fuel pump of tank No. 2; 83 – booster fuel pump ЭЦН-Т of tank No. 2; 84 – relay К-50Д of booster fuel pump of tank No. 5; 85 – relay РП-2 controlling augmented duty of booster fuel pump of tank No. 5; 86 – resistor ПО-10-5 of booster fuel pump of tank No. 5; 87 – booster fuel pump ЭЦН-Т of right tank No. 5; 88 – crew commander (left pilot) instrument panel; 89 – landing gear and fuel pump relay distribution box (in right landing gear well); 90 – landing gear and fuel pump relay distribution box (in left landing gear well); 91 – fuel gauge distribution box (at frame No. 22); 92 – fuel pump distribution box (at frame No. 49); 93 – distribution box of booster fuel pump of tank No. 5 (beginning from 3rd aircraft of 1st series and ending with 5 aircraft of 3rd series); 94 – plug connector [illegible]; 95 – fuel gauge distribution box (frame No. 22); 96 – plug connector [illegible]; 97 – distribution box of booster fuel pump of tank No. 5 (beginning from 3rd aircraft of 1st series and ending with 5 aircraft of 3rd series); 98 – pilot upper electric panel; 99 – plug connector [illegible] No. 10; 100 – plug connector [illegible].

[redacted]

50X1-HUM

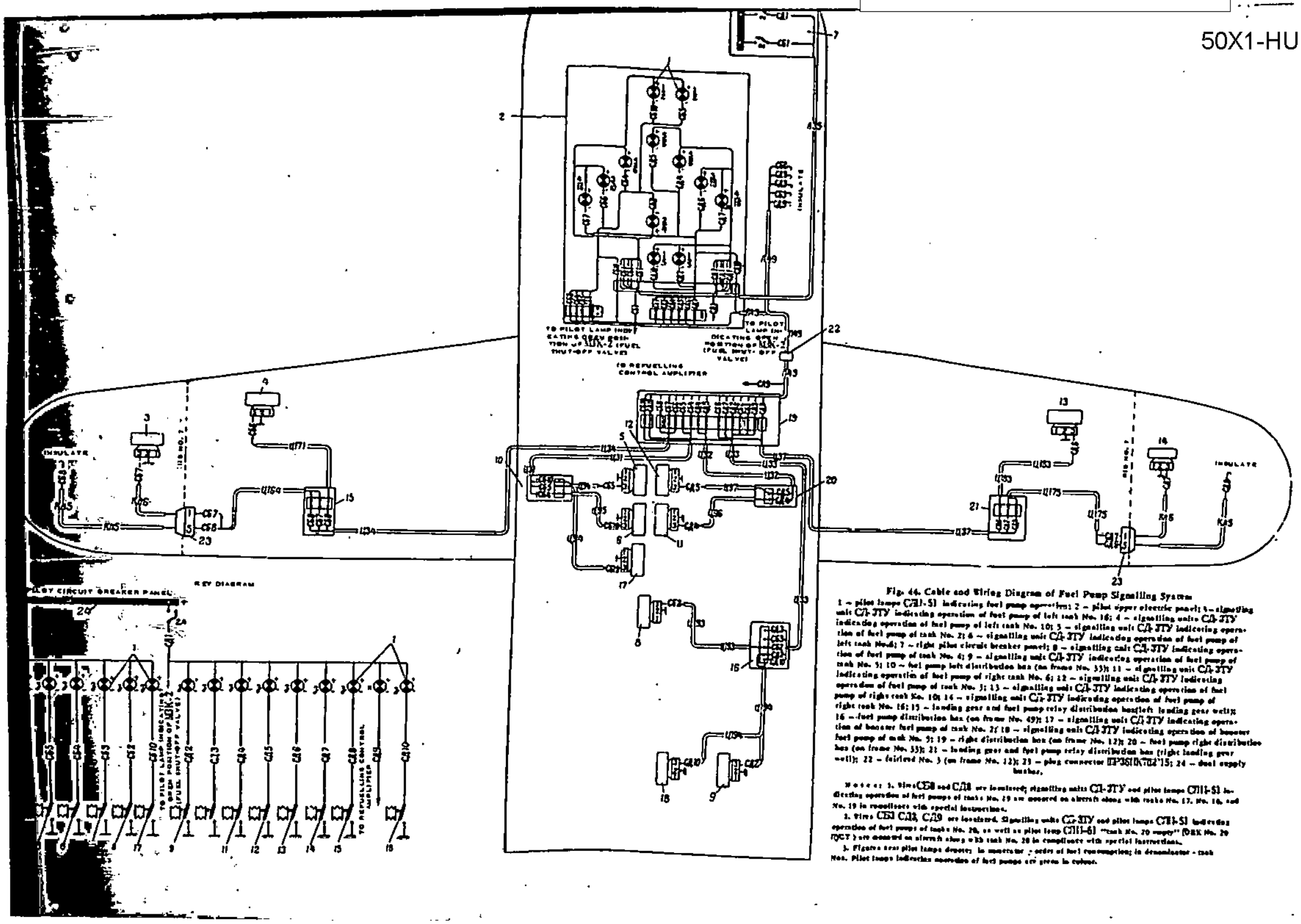

Fig. 44. Cable and Wiring Diagram of Fuel Pump Signalling System

1 – pilot lamps СЛЦ-51 indicating fuel pump operation; 2 – pilot upper electric panel; 3 – signalling unit СД-ЗТУ indicating operation of fuel pump of left tank No. 16; 4 – signalling units СД-ЗТУ indicating operation of fuel pump of left tank No. 10; 5 – signalling unit СД-ЗТУ indicating operation of fuel pump of tank No. 2; 6 – signalling unit СД-ЗТУ indicating operation of fuel pump of left tank No. 6; 7 – right pilot circuit breaker panel; 8 – signalling unit СД-ЗТУ indicating operation of fuel pump of tank No. 4; 9 – signalling unit СД-ЗТУ indicating operation of fuel pump of tank No. 5; 10 – fuel pump left distribution box (on frame No. 33); 11 – signalling unit СД-ЗТУ indicating operation of fuel pump of right tank No. 6; 12 – signalling unit СД-ЗТУ indicating operation of fuel pump of tank No. 3; 13 – signalling unit СД-ЗТУ indicating operation of fuel pump of right tank No. 10; 14 – signalling unit СД-ЗТУ indicating operation of fuel pump of right tank No. 16; 15 – landing gear and fuel pump relay distribution box (left landing gear well); 16 – fuel pump distribution box (on frame No. 49); 17 – signalling unit СД-ЗТУ indicating operation of booster fuel pump of tank No. 2; 18 – signalling unit СД-ЗТУ indicating operation of booster fuel pump of tank No. 5; 19 – right distribution box (on frame No. 12); 20 – fuel pump right distribution box (on frame No. 33); 21 – landing gear and fuel pump relay distribution box (right landing gear well); 22 – fairlead No. 3 (on frame No. 12); 23 – plug connector ШР36П(К)Э2"15; 24 – dual supply busbar.

Notes: 1. Wires СБ8 and СД8 are insulated; signalling units СД-ЗТУ and pilot lamps СЛЦ-51 indicating operation of fuel pumps of tanks No. 19 are mounted on aircraft along with tanks No. 17, No. 18, and No. 19 in compliance with special instructions.

2. Wires СБ3 СД3, СД9 are insulated. Signalling units СД-ЗТУ and pilot lamps СЛЦ-51 indicating operation of fuel pumps of tanks No. 20, as well as pilot lamp СЛЦ-51 "tank No. 20 empty" (ОБК No. 20 ПУСТ) are mounted on aircraft along with tank No. 20 in compliance with special instructions.

3. Figures near pilot lamps denote: in numerator – order of fuel consumption; in denominator – tank Nos. Pilot lamps indicating operation of fuel pumps are given in column.

[redacted]

50X1-HUM

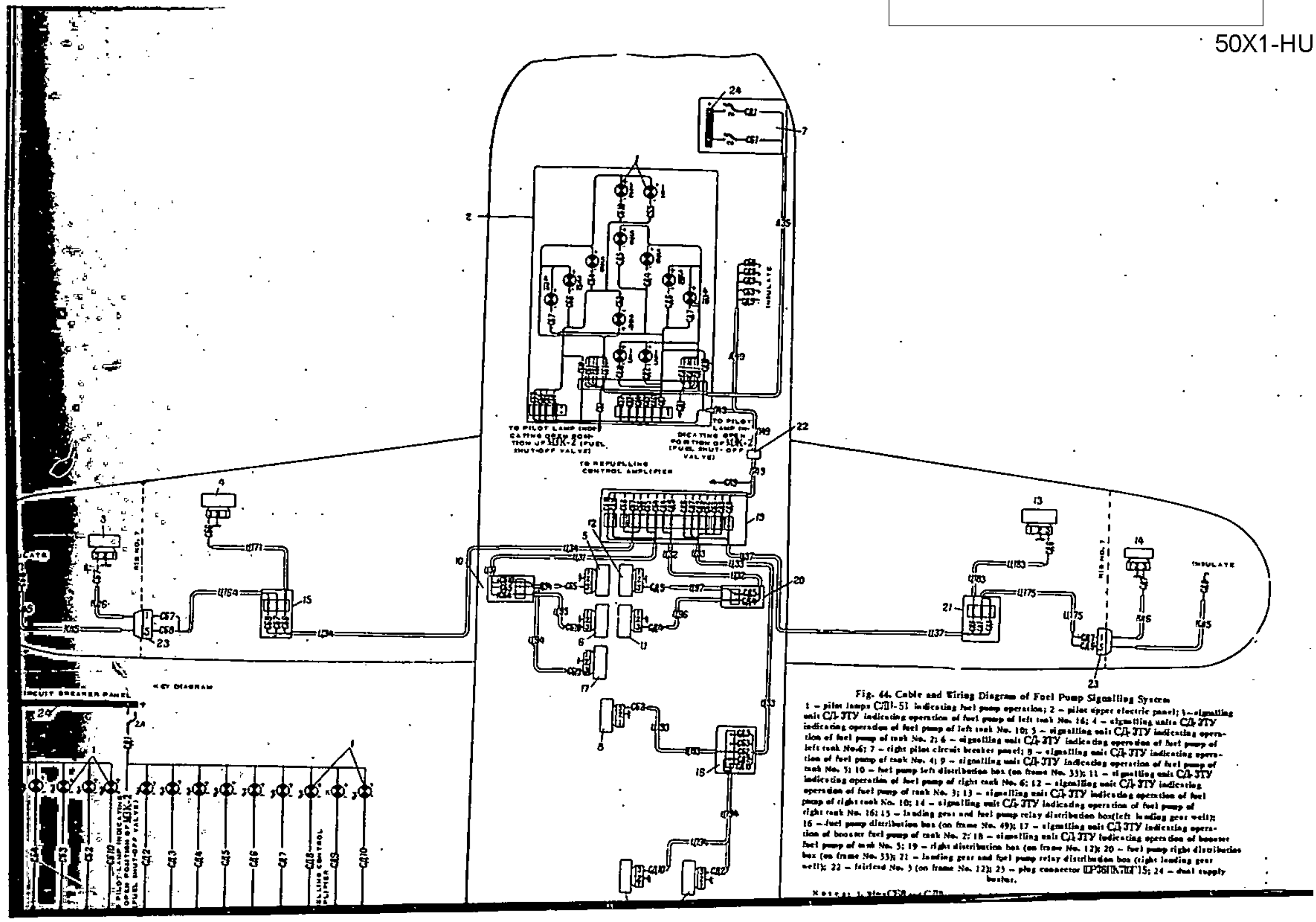

Fig. 44. Cable and Wiring Diagram of Fuel Pump Signalling System

1 – pilot lamps СЛЦ-51 indicating fuel pump operation; 2 – pilot upper electric panel; 3 – signalling unit СД-3ТУ indicating operation of fuel pump of left tank No. 16; 4 – signalling units СД-3ТУ indicating operation of fuel pump of left tank No. 10; 5 – signalling unit СД-3ТУ indicating operation of fuel pump of tank No. 2; 6 – signalling unit СД-3ТУ indicating operation of fuel pump of left tank No. 6; 7 – right pilot circuit breaker panel; 8 – signalling unit СД-3ТУ indicating operation of fuel pump of tank No. 4; 9 – signalling unit СД-3ТУ indicating operation of fuel pump of tank No. 5; 10 – fuel pump left distribution box (on frame No. 33); 11 – signalling unit СД-3ТУ indicating operation of fuel pump of right tank No. 6; 12 – signalling unit СД-3ТУ indicating operation of fuel pump of tank No. 3; 13 – signalling unit СД-3ТУ indicating operation of fuel pump of right tank No. 10; 14 – signalling unit СД-3ТУ indicating operation of fuel pump of right tank No. 16; 15 – landing gear and fuel pump relay distribution box (left landing gear well); 16 – fuel pump distribution box (on frame No. 49); 17 – signalling unit СД-3ТУ indicating operation of booster fuel pump of tank No. 2; 18 – signalling unit СД-3ТУ indicating operation of booster fuel pump of tank No. 5; 19 – right distribution box (on frame No. 12); 20 – fuel pump right distribution box (on frame No. 33); 21 – landing gear and fuel pump relay distribution box (right landing gear well); 22 – fairlead No. 3 (on frame No. 12); 23 – plug connector ШР36ПК7НГ15; 24 – dual supply busbar.

Notes: 1. Wires C58 and C59

[redacted]

50X1-HUM

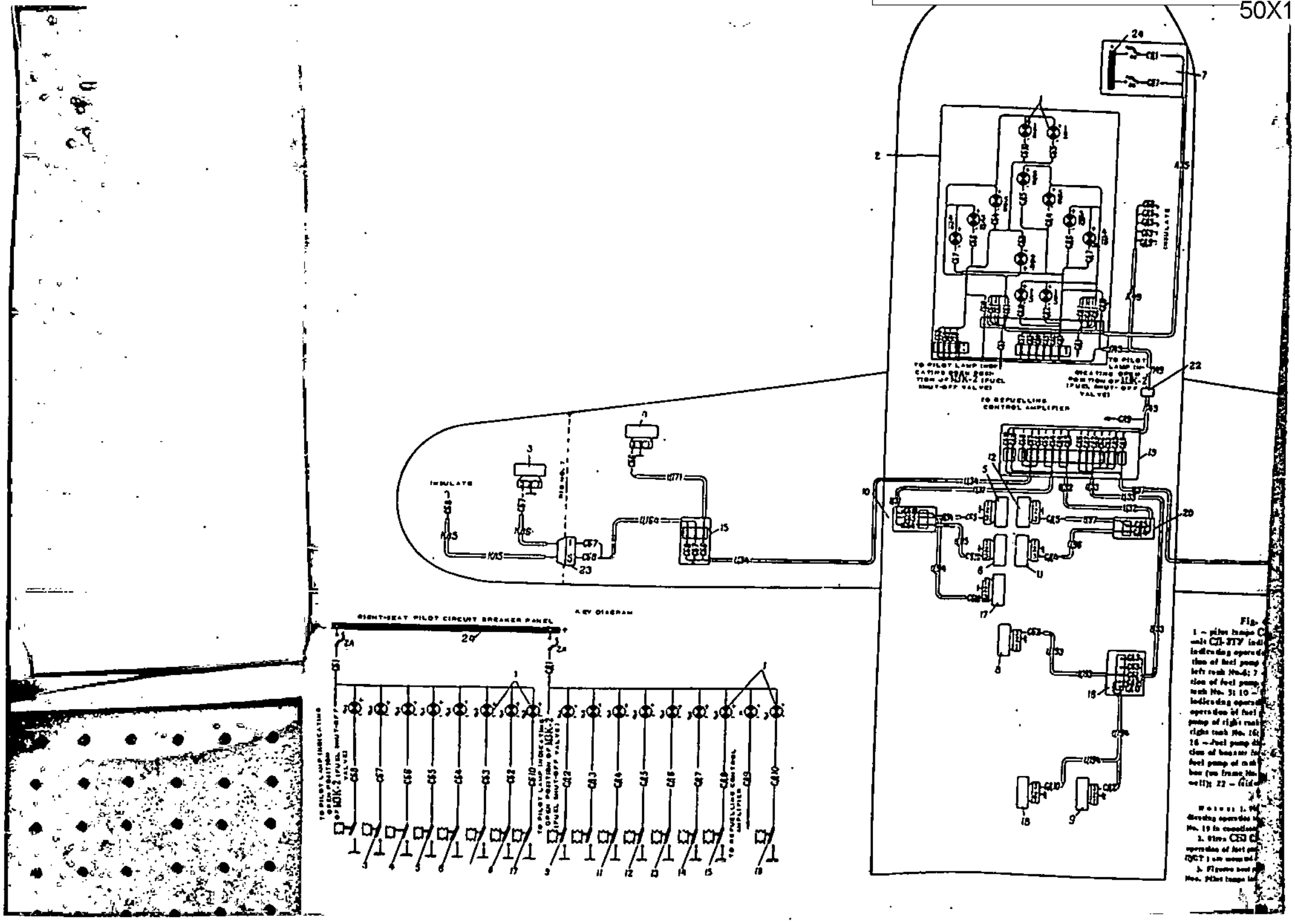

Fig.

1 – pilot lamps C
ule СЛ-37У indi
indicating opera
tion of fuel pump
left tank No.4; 7
tion of fuel pump
tank No. 3; 10 –
indicating opera
operation of fuel
pump of right tank
right tank No. 16(
16 – fuel pump
tion of booster
fuel pump of mai
box (on frame No.
well); 22 – Gid

Notes: 1.
dicating operation
No. 19 is conn

2. Wires C53 C
operation of fuel pu
(QCT) are mounted

3. Figures next
Nos. pilot lamps in

[redacted]

50X1-HUM

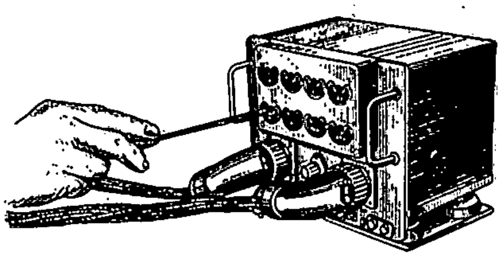

Fig. 45. Adjusting Fuel Consumption Automatic Control Equipment

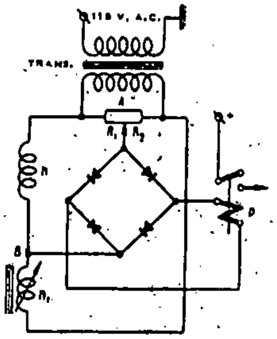

Fig. 46. Key Diagram of Fuel Gauge C3TC-60M Automatic Equipment Bridge.

[redacted]

50X1-HUM

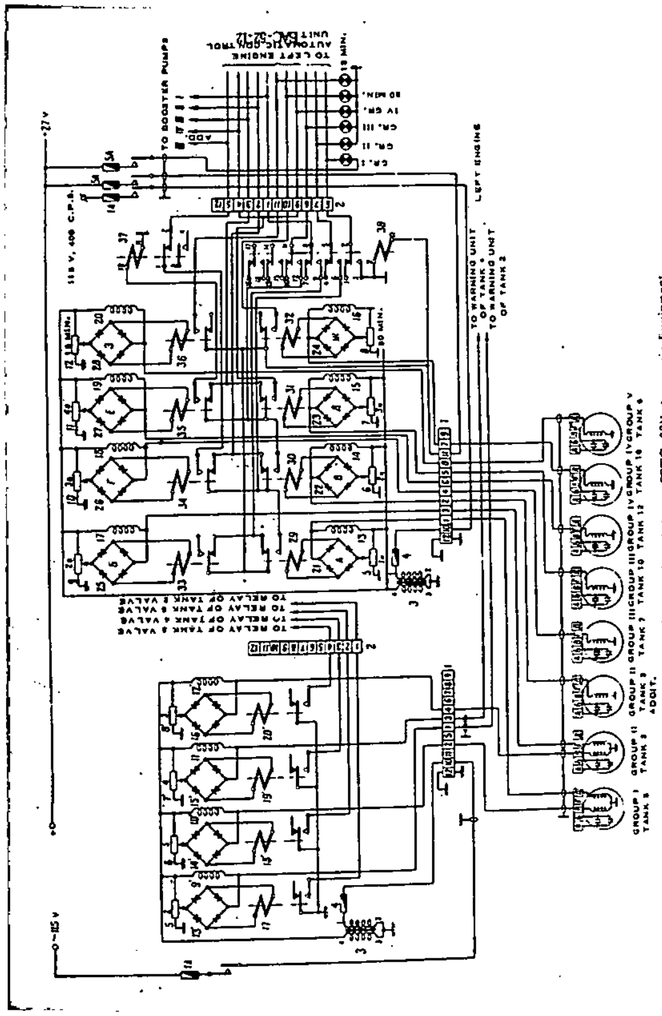

Fig. 47. Electric Diagram of Fuel Gauge СЭТС-60М Automatic Equipment

1 – plug connector ШР32У12НШ1; 2 – plug connector ШР32У12НГ1; 3 – transformer; 4 – tube fuse ПК-45-1; 5, 6, 7, 8, 9, 10, 11, and 12 – rheostats; 13, 14, 15, 16, 17, 18, 19, and 20 – coils; 21, 22, 23, 24, 25, 26, 27, and 28 – selenium rectifiers; 29, 30, 31, 32, 33, 34, 35, and 36 – electromagnetic relays; 37 and 38 – relays.

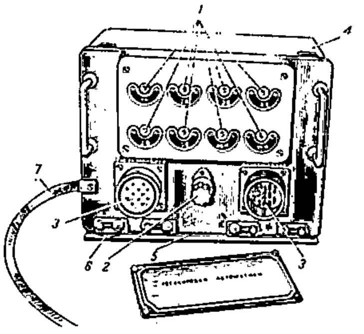

Fig. 48. Automatic Equipment Unit БАС-52-12. Front View

1 – rheostat axles; 2 – safety fuse; 3 – twelve-pin plug connectors; 4 – housing; 5 – mounting plate; 6 – shock absorbers; 7 – bonding strip.

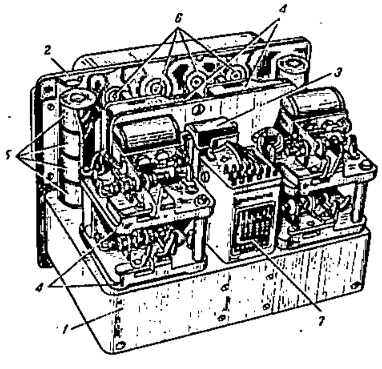

Fig. 49. Automatic Equipment Unit БАС-52-12. Rear View (with Housing Removed)

1 – mounting frame; 2 – front panel; 3 – relay РМС-2; 4 – sensitive electromagnetic relays; 5 – coils; 6 – rheostats; 7 – relay РП 6.

[redacted]

50X1-HUM

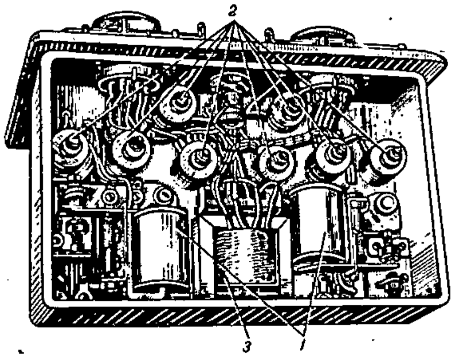

Fig. 50. Automatic Equipment Unit BAC-52-12. Underside View (with Housing Removed)

1 – sensitive electromagnetic relays; 2 – selenium rectifiers; 3 – transformer.

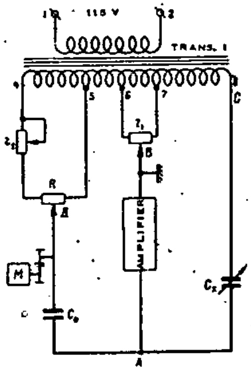

Fig. 51. Key Diagram of Self-Balancing Bridge

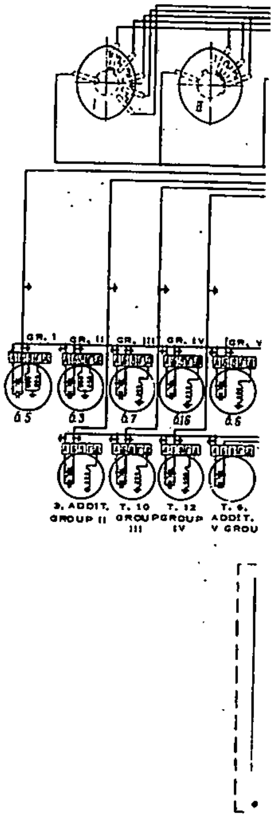

Fig. 52. Measur

1 and 2 – transformers; 3,4,5 and 16, 17, 18, 19, 20, 21, 22, 23, 24, rheostats; 46 – capacitor ; 47 – c

[redacted]

50X1-HUM

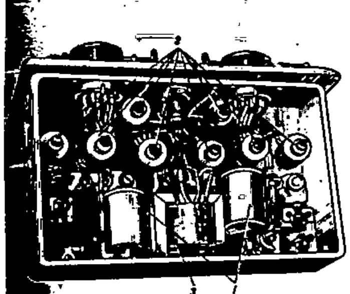

50. Automatic Equipment Unit БАС-52-12. Under-view (with Housing Removed)

sensitive electromagnetic relays; 2 – selenium rectifiers; transformer.

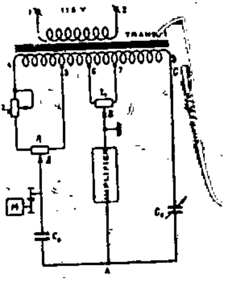

Fig. 51. Key Diagram of Self-Balancing Bridge

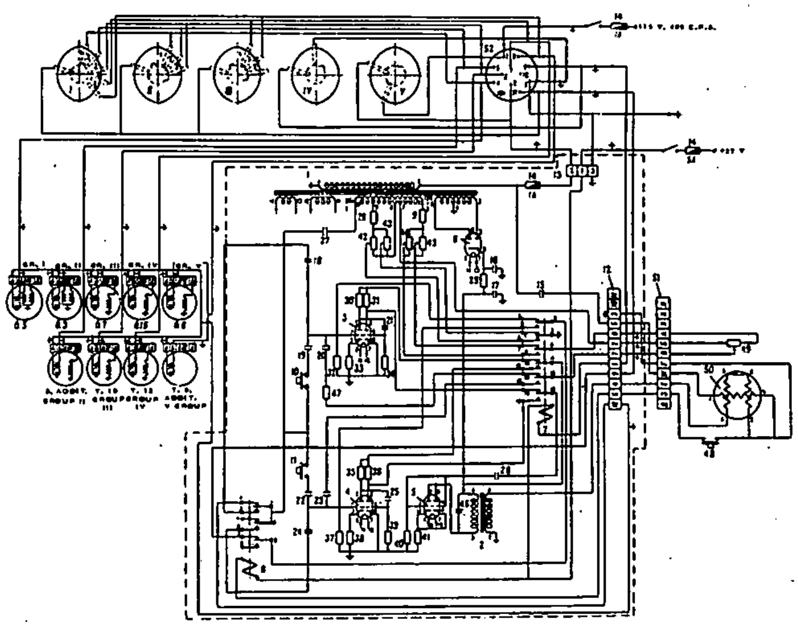

Fig. 52. Measuring Equipment of Fuel Gauge СЭТС-60М. Circuit Diagram

1 and 2 – transformers; 3,4,5 and 6 – valves; 7 and 8 – relays; 9 – coil; 10 and 11 – buttons; 12 and 13, 51 and 52 – plug connectors; 14 – tube fuse; 15, 16, 17, 18, 19, 20, 21, 22, 23, 24, 25, 26, 27 – capacitors; 28 – coil; 29, 30, 31, 32, 33, 34, 35, 36, 37, 38, 39, 40, and 41 – resistors; 42, 43, 44, and 45 – rheostats; 46 – capacitor; 47 – coils; 48 – button; 49 – rheostat; 50 – electric motor.

[redacted]

50X1-HUM

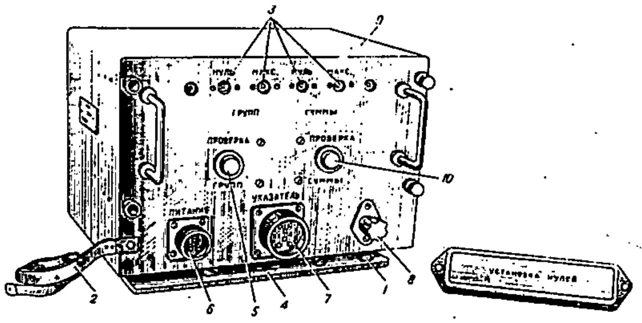

Fig. 53. General View of Amplifier ЭТ-88М in Housing

1 – shock absorber 271c-49-2-6; 2 – bonding wire; 3 – rheostat axles; 4 – mounting plate; 5 – button "Group Check-Up"; 6 – three-pin plug connector; 7 – twelve-pin plug connector; 8 – safety fuse; 9 – amplifier housing; 10 – button "Total Amount Check-Up".

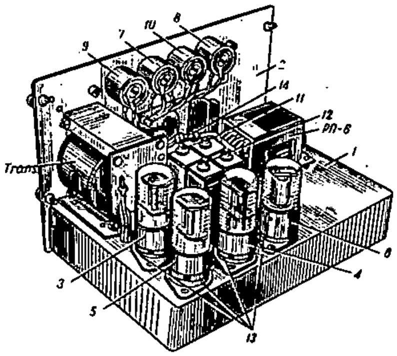

Fig. 54. Amplifier ЭТ-88М with Housing Removed (Rear View)

1 – mounting frame; 2 – front panel; 3,4,5 and 6 – valves; 7, 8, 9 and 10 – rheostats; 11 and 12 – capacitors; 13.– valve panels; 14 – resistor.

[redacted]

50X1-HUM

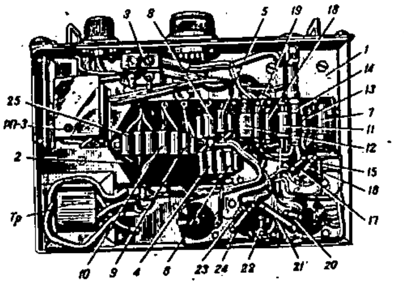

Fig. 55. Amplifier УТ-88М with Housing Removed (Underside View)

1 – mounting frame; 2 – capacitor panel; 3, 4, 5, 6, 7, 8, 9, 10, 11, and 12 – capacitors; 13, 14, 15, 16, 17, 18, 19, 20, 21, 22, 23, and 24 – resistors; 25 – capacitor.

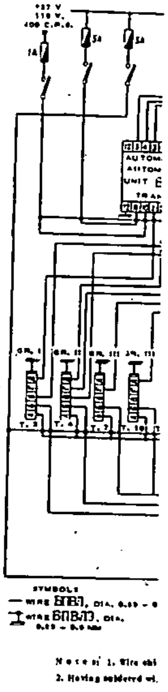

[redacted]

50X1-HUM

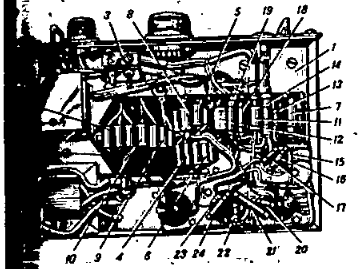

Amplifier УТ-88М with Housing Removed (Underside View)
ing frame; 2 – capacitor panel; 3, 4, 5, 6, 7, 8, 9, 10, 11, and
citors; 13, 14, 15, 16, 17, 18, 19, 20, 21, 22, 23, and 24 –
resistors; 25 – capacitor.

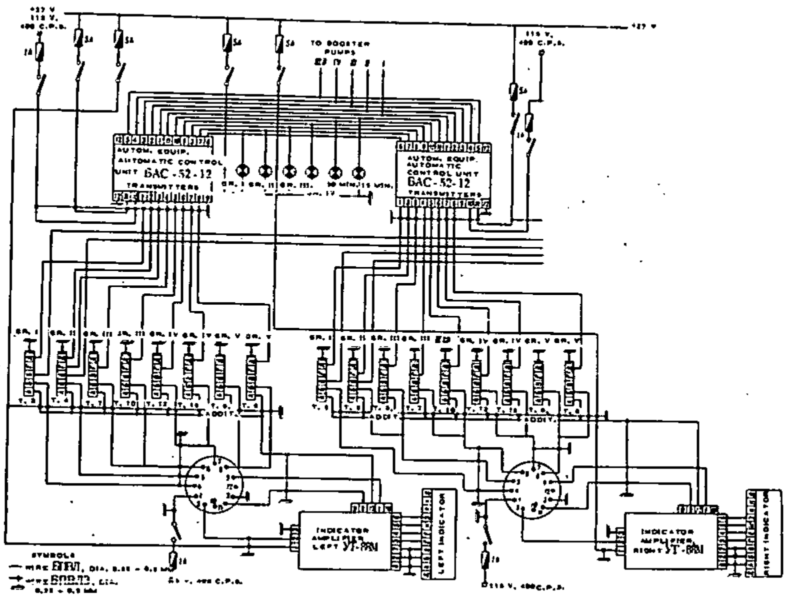

Fig. 56. Interconnection Diagram of Fuel Gauge СЭТС-60М

Notes: 1. Wire shields should not have longitudinal seams.

2. Having soldered wires to plug connectors of transmitters, fill the latter with ceresine (t = 75°C).

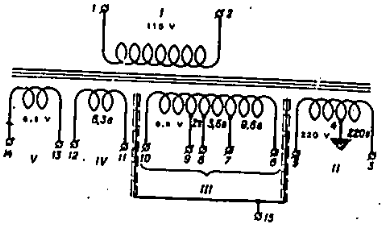

Fig. 57. Diagram of Transformer (I)

Transformer characteristics:

Winding I – voltage 115 V; magnet wire ПЭВ-2, dia. 0.31 mm; number of turns - 288.

Winding II - voltage 400 V; magnet wire ПЭДШО, dia. 0.5 mm; number of turns - 1100, with 550 turn tapped.

Winding III - voltage 22 V; magnet wire ПЭВ-2, dia. 0.12 mm; number of turns - 55, with 24, 33, and 38 turns tapped.

Winding IV - voltage 6.3 V; wire ПЭВ-2, dia. 0.15 mm; number of turns - 16.

Winding V - voltage 6.3 V; wire ПЭВ-2, dia. 0.15 mm; number of turns – 16.

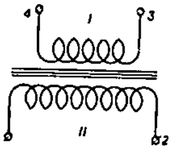

Fig. 58. Diagram of Transformer (II)

Transformer characteristics:

Winding I – magnet wire ПЭВ-2, dia. 0.12 mm; number of turns - 2000.

Winding II - magnet wire ПЭВ-2, dia. 0.15 mm; number of turns - 450.

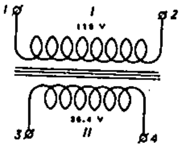

Fig. 59. Diagram of Transformer (III)

Transformer characteristics:

Winding I - magnet wire ПЭВ-2, dia. 0.35 mm; number of turns - 380.

Winding II - magnet wire ПЭВ-2, dia. 0.55 mm; number of turns - 120.

[redacted]

50X1-HUM

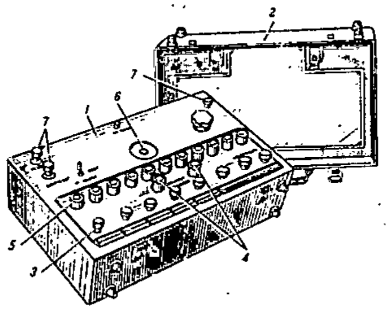

Fig. 60. External View of Tester ЭПА-53-ГО (with Cover Removed,

1 – housing; 2 – cover; 3 – simulator knobs serving for changing inductance (8 pieces); 4 – pilot lamps for checking voltage; 5 – pilot lamps for checking automatic equipment operation; 6 – indicator for checking signalling unit for proper functioning; 7 – terminals for connection of power supply.

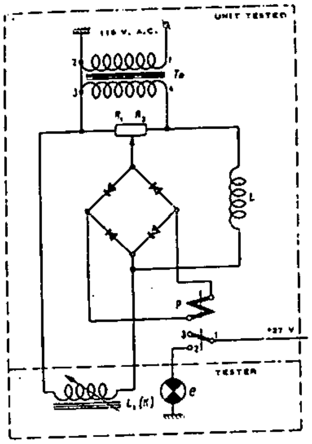

Fig. 61. Checking Automatic Equipment Bridge. Key Diagram

P – relay; 1, 2, 3 – relay contacts; e – pilot lamp; Tp – transformer; L – constant inductance; L_1 – variable inductance; R_1 and R_2 – resistors;

K – core.

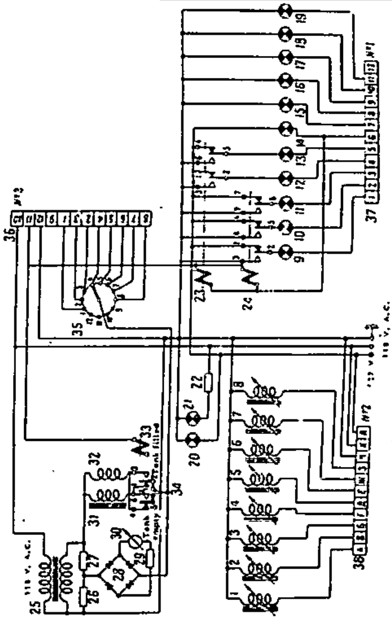

Fig. 63. Circuit Diagram of Tester ЭПА-53-ГО

1, 2, 3, 4, 5, 6, 7, and 8 – coils (simulating devices); 9, 10, 11, 12, 13, 14, 15, 16, 17, 18, 19, 20, 21 – pilot lamps СЦ-30; 22 – resistor ПКО-20-ГОО; 23 and 31 – relay РМП-2; 24 – relay РМП-3; 25 – transformer; 26 and 27 – manganin resistors rated for 1500 ohms; 28 – selenium rectifier (ВС-18-12); 29 – resistor coil rated for 200 ohms; 30 – indicator (ammeter П-300); 31 – inductance coil with iron core; 32 – inductance coil without iron core; 34 and 35 – switches; 36, 37, and 38 – plug connectors.

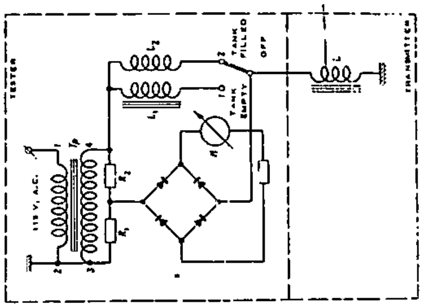

Fig. 62. Checking Transmitter Signalling Units Key Diagram

1 and 2 – switch contacts; k_1 and k_2 – constant coils; L_1 and L_2 – constant inductances; L – variable inductance; И – indicator; Tp – transformer.

[redacted]

50X1-HUM

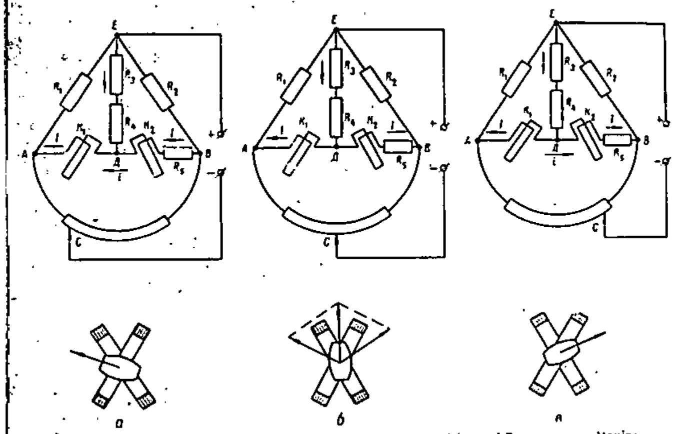

Fig. 67. Diagram of Oil Pressure Gauge Operation at Various Positions of Potentiometer Moving Contact

a – direction of resultant magnetic field vector and indicator rotor with no pressure applied to diaphragm of transmitter П-10; б – direction of resultant magnetic field vector and indicator rotor when pressure applied to diaphragm of transmitter П-10 amounts to half of maximum pressure; в – direction of resultant magnetic field vector and indicator rotor with maximum pressure applied to diaphragm of transmitter П-10; K_1 and K_2 – fixed coils; R_1, R_2, R_3, R_4, and R_5 – resistors; ABC – potentiometer; EД – semi-diagonal.

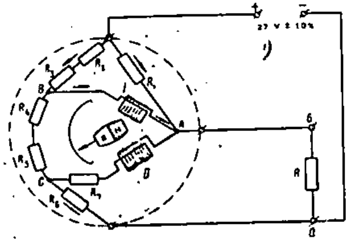

Fig. 68. Key Diagram of Oil Thermometer

I and II – loops; R_1, R_2, R_3, R_4, R_5, R_6, and R_7 – resistors.

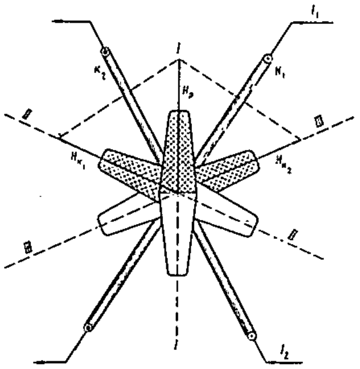

Fig. 69. Vector Diagram of Oil Thermometer Logometer Magnetic Fluxes

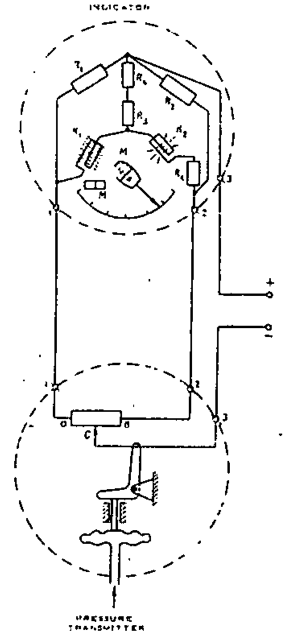

Fig. 70. Key Diagram of Pressure Gauge ДИМ -3

[redacted]

50X1-HUM

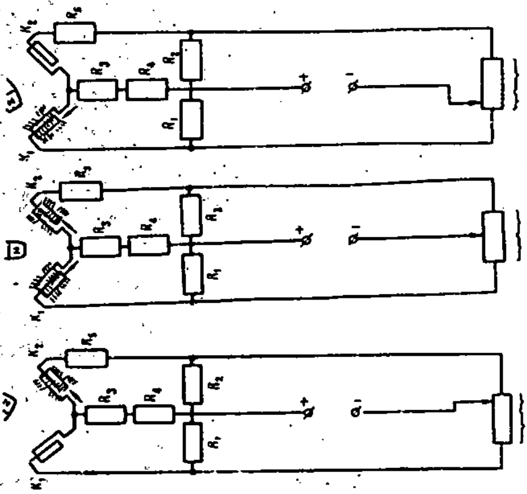

Fig. 71. Diagram of ЭДМУ-3 Operation at Various Positions of Potentiometer Moving Contact

a – $p = 0$; b – $p = 0.5\, p_{max}$; c – $p = p_{max}$.

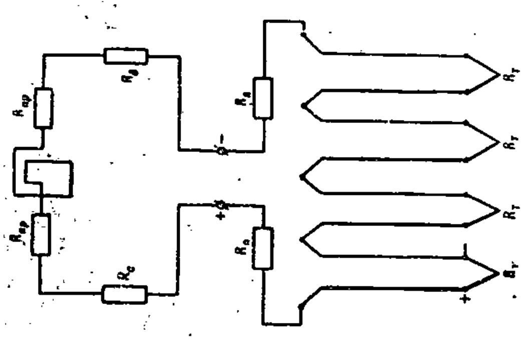

Fig. 72. Circuit Diagram of Thermometer ТВГ-11

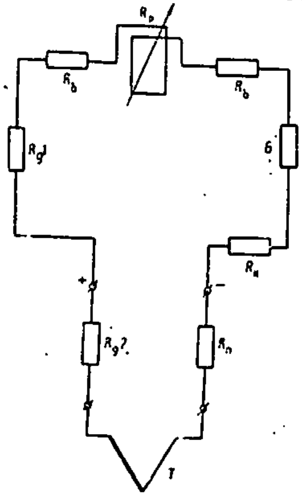

Fig. 73. Circuit Diagram of Thermometer TCT-29

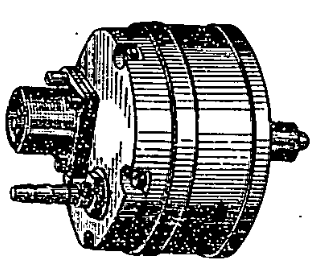

Fig. 74. External View of Pressure Warning Mechanism СД-24А

SECRET
NO FOREIGN DISSEM

50X1-HUM

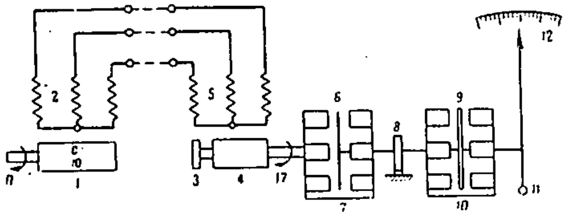

Fig. 75. Key Diagram of Tachometer ТЭ-5-2

1 – generator rotor; 2 – generator stator; 3 – hysteresis disc; 4 – permanent magnet; 5 – synchronous motor stator; 6 – sensing element; 7 – magnet assembly; 8 – hair spring; 9 – damper disc; 10 – damper; 11 – pointer; 12 – scale.

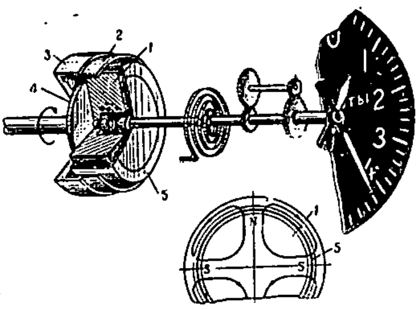

Fig. 76. Diagram of Tachometer ТЭ-45 Indicator

1 – permanent magnet; 2 – iron screen; 3 – duralumin holder; 4 – thermomagnetic shunt; 5 – sensing element.

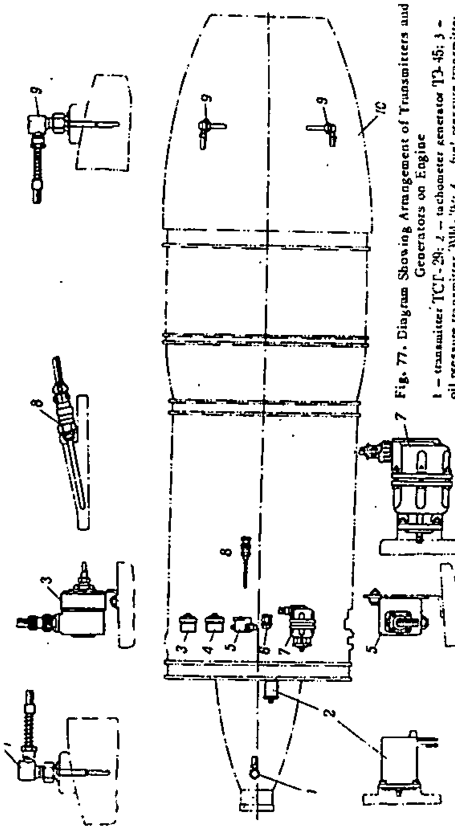

Fig. 77. Diagram Showing Arrangement of Transmitters and Generators on Engine

1 – transmitter ТСГ-29; 2 – tachometer generator ТЭ-45; 3 – oil pressure transmitter ЭМИ-3Р; 4 – fue' pressure transmitter ЭМИ-3Р; 5 – fuel pressure transmitter ЭДМУ-3; 6 – plug connector of tachometer generator ТЭ-45; 7 – tachometer generator ТЭ-5-2; 8 – oil temperature transmitter ЭМИ-3Р; 9 – thermometer transmitter ТВГ-11; 10 – engine.

SECRET
NO FOREIGN DISSEM

[redacted]

50X1-HUM

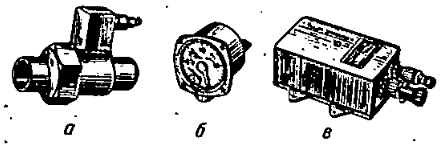

Fig. 78. External View of Fuel Flow Meter Set PTC-16
а – transmitter; б – indicator; в – thyratron interrupter.

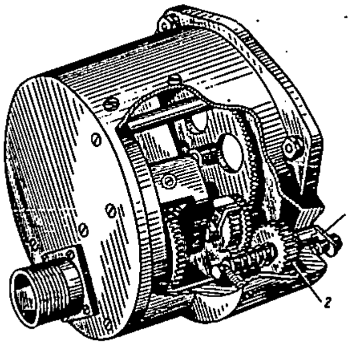

Fig. 80. Indicator of Fuel Flow Meter PTC-16
1 – strip; 2 – pointer setting gear.

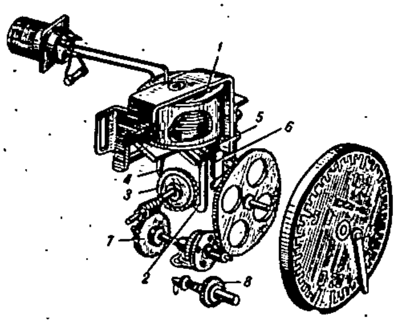

Fig. 79. Indicator of Fuel Flow Meter PTC-16
Mechanical Diagram
1 – electromagnetic relay; 2 – driving pawl; 3 – ratchet wheel; 4 – retaining pawl; 5 – eccentric; 6 – return spring; 7 – reduction gear; 8 – pointer setting gear.

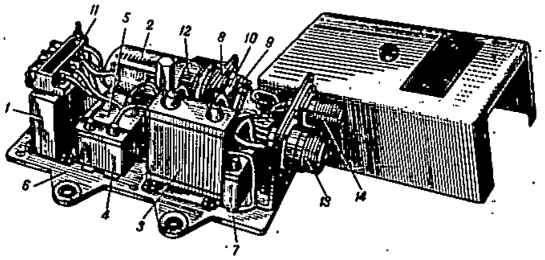

Fig. 81. Thyratron Interrupter
1 – power transformer; 2 – thyratron ТГ-1-01-1,3; 3, 4, 5, and 7 – capacitors; 9, 10, and 11 – resistors; 6 – duralumin panel; 8 – angle plate; 12 – collar; 13 – five-pin plug connector; 14 – single-pin plug connector.

[redacted]

50X1-HUM

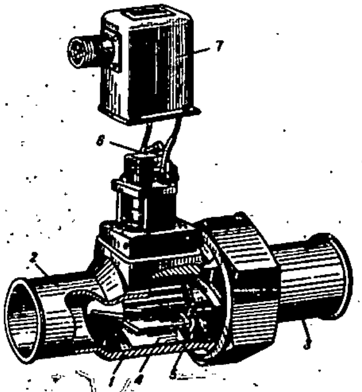

Fig. 82. Transmitter of Fuel Flow Meter PTC-16

1 – housing; 2 and 3 – pipe connections; 4 – guide vane assembly; 5 – impeller; 6 – guard strap; 7 – contact-pulse mechanism casing.

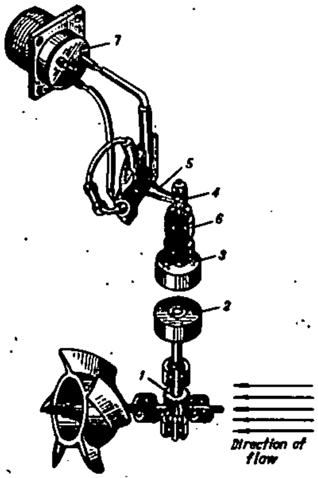

Fig. 83. Transmitter of Fuel Flow Meter PTC-16 Mechanical Diagram

1 – worm reduction gear; 2 – driving two-pole magnet; 3 – driven magnet; 4 – cylindrical interrupter; 5 – fixed platinum-iridium brushes; 6 – interrupter ball bearings; 7 – three-pin plug connector.

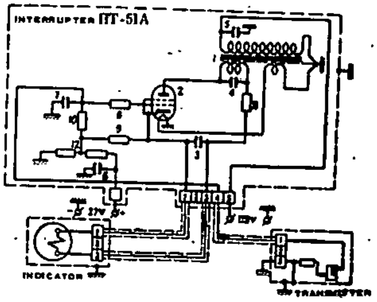

Fig. 84. Circuit Diagram of Fuel Flow Meter PTC-16

1 – power transformer; 2 – thyratron; 3, 4, 5, 6, and 7 – capacitors rated for 10,10; 0.5, 1.0, and 1.0 μF respectively; 8, 9, 10, 11 – resistors rated for 10, 10, 150, and 75 kilohms respectively; 12 – voltage divider.

SECRET
NO FOREIGN DISSEM

50X1-HUM

TU-16 AIRCRAFT

AIRCRAFT SERVICE MANUAL

Book II

Navigation Equipment, Autopilot, Oxygen, Electrical,
Photo, and Radio Equipment

GROUP 1
Excluded from automatic
downgrading and
declassification

SECRET
NO FOREIGN DISSEM

[redacted]

50X1-HUM

ТУ-16 AIRCRAFT SERVICE MANUAL

Book Two

[redacted]

50X1-HUM

TY—16 AIRCRAFT SERVICE MANUAL

Book Two

Navigation Equipment.
Autopilot. Oxygen, Electrical,
Photo, and Radio Equipment

[redacted]

50X1-HUM

The book contains 261 pages.
Besides, there are seven inserts on seven sheets, and figures on forty three sheets at the end of the book.

CONTENTS

[redacted]

50X1-HUM

[redacted]
50X1-HUM

The Aircraft Service Manual comprises three books:

Book One includes: aircraft ground servicing; care and maintenance of airframe, emergency and rescue equipment, aircraft control system, landing gear, hydraulic systems, power plants, high-altitude equipment; packing and shipment of aircraft.

Book Two includes: care and maintenance of navigation equipment, autopilot, oxygen, electrical, photo, and radio equipment.

Book Three includes: care and maintenance of bombing equipment.

[redacted]

50X1-HUM

NAVIGATION EQUIPMENT AND ENGINE INSTRUMENTS

GENERAL

1. The navigation equipment includes:

(a) the Pitot-static system;

(b) the Pitot-static instruments, namely: type КУС-1200 airspeed (I.A.S. and T.A.S.) indicators, type ВД-20 altimeters, type ВАР-30-3 rate-of-climb indicators, type ССН-3 velocity head warning units, type МС-1 machmeters (with warning lights), type ВС-46 cabin pressure warning units, type УВПД-15 cabin altimeters;

Note: Apart from the above-listed instruments, the Pitot-static system actuates the T.A.S. transmitter belonging to the НИ-50Б air position indicator set and the altitude and speed transmitters of the ОПБ-11р optical bombsight set.

(c) the electri al instruments, namely: type ДГМК-7 and type ДАК-ДБ-5 compasses, type НИ-50Б air position indicator, type АГБ-2 gyro horizon, type ГПК-52 directional gyro, type ТУЭ-48 tachometers, type ЭУП-53 turn indicators;

(d) the autonomous instruments, namely: type КИ-12 magnetic compass, type АК-53 hand-operated astrocompass, type ИАС-51 aircraft sextant, type АН-10 accelerometer, types АЧХО and АВР-М clocks.

2. The engine instruments comprise the electric pressure gauges, thermometers, and tachometers.

The arrangement of instruments on the instrument panels is shown in Figs 1 to 7 inclusive.

PITOT-STATIC NAVIGATIONAL INSTRUMENTS

GENERAL

The instruments, types КУС-1200 , ВАР-30-3 , ВД-20, МС-1, ССН-3, УВПД-15 , and ВС-46, are actuated by the Pitot-static pressure system.

For installation on and removal of instruments from the instrument panels refer to the Book "Repair of Aircraft".

Altimeters

Altimeters are mounted on the instrument panels of both pilots, navigator, navigator-radar operator, and radio operator, i.e. five altimeters in total.

The ВД-20 altimeters operate in the temperature range of +50 to -60°C and indicate a relative (barometric) flight altitude within the limits of 0 to 20,000 m. One full revolution of the larger pointer corresponds to 1000 m. One full revolution of the smaller pointer corresponds to 20,000 m.

[redacted]

50X1-HUM

NAVIGATION EQUIPMENT AND ENGINE INSTRUMENTS

GENERAL

1. The navigation equipment includes:

(a) the Pitot-static system;

(b) the Pitot-static instruments, namely: type КУС-1200 airspeed (I.A.S. and T.A.S.) indicators, type ВД-20 altimeters, type ВАР-30-3 rate-of-climb indicators, type ССН-3 velocity head warning units, type МС-1 machmeters (with warning lights), type ВС-46 cabin pressure warning units, type УВПД-15 cabin altimeters;

Note: Apart from the above-listed instruments, the Pitot-static system actuates the T.A.S. transmitter belonging to the НИ-50Б air position indicator set and the altitude and speed transmitters of the ОПБ-11р optical bombsight set.

(c) the electrical instruments, namely: type ДГМК-7 and type ДАК-ДБ-5 compasses, type НИ-50Б air position indicator, type АГБ-2 gyro horizon, type ГПК-52 directional gyro, type ТУЭ-48 tachometers, type ЭУП-53 turn indicators;

(d) the autonomous instruments, namely: type КИ-12 magnetic compass, type АК-53 hand-operated astrocompass, type НАС-51 aircraft sextant, type АМ-10 accelerometer, types АЧХО and АВР-М clocks.

2. The engine instruments comprise the electric pressure gauges, thermometers, and tachometers.

The arrangement of instruments on the instrument panels is shown in Figs 1 to 7 inclusive.

PITOT-STATIC NAVIGATIONAL INSTRUMENTS

GENERAL

The instruments, types КУС-1200, ВАР-30-3, ВД-20, МС-1, ССН-3, УВПД-15, and ВС-46, are actuated by the Pitot-static pressure system.

For installation on and removal of instruments from the instrument panels refer to the Book "Repair of Aircraft".

Altimeters

Altimeters are mounted on the instrument panels of both pilots, navigator, navigator-radar operator, and radio operator, i.e. five altimeters in total.

The ВД-20 altimeters operate in the temperature range of +50 to -60°C and indicate a relative (barometric) flight altitude within the limits of 0 to 20,000 m. One full revolution of the larger pointer corresponds to 1000 m. One full revolution of the smaller pointer corresponds to 20,000 m.

[redacted]

50X1-HUM

Airspeed Indicators

The КУС-1200 airspeed indicators are installed on the instrument panels of both pilots, navigator, navigator-radar operator, and radio operator. The КУС-1200 airspeed indicators function in the temperature range between +50 and -60°C and read I.A.S. from 100 to 1200 km/hr and T.A.S. from 400 to 1200 km/hr at a flight altitude ranging from 0 to 15,000 m. The scale graduation value is 10 km/hr, each 100 km/hr division being numbered.

Rate-of-Climb Indicators

The rate-of-climb indicators are mounted on the instrument panels of both the left-seat pilot and the right-seat pilot. The rate-of-climb indicators operate in the temperature range of +50 to -60°C and give the vertical component of the rate of climb or descent within the range of 0 to 30 m/sec. both towards climb or descent.

Machmeters

The machmeters are installed on the instrument panels of both the left-seat pilot and the right-seat pilot. The machmeters function in the temperature range of +50 to -60°C and read the Mach number within the limits of 0.5 to 1 at a flight altitude ranging from 0 to 18,000 m. At Mach number equal to 0.86 (the instrument is adjusted for this value) the warning lights with red light filters, mounted near the machmeters, go on. Under the warning lights there is a caption "SPEED TOO HIGH". The warning light warns the pilot that the aircraft is approaching the critical Mach number equal to 0.9 for this type of aircraft.

Velocity Head Warning Units

Two warning units are mounted on the aircraft behind the pilot s seats. The warning units operate in the temperature range of -50 to +60°C.By sending electrical signals when the velocity head of $q=2300$ kg/m^2 or Mach 0.86 are reached, the warning units warn the pilot that the aircraft is approaching the maximum allowable flight speed.

Limitations for velocity head q and Mach number for various flying weights versus flight altitude are given in the graph (See Fig.8).

Cabin Altimeters

Two cabin altimeters, type УВПД-15, are mounted on the instrument panels of the right-seat pilot and the radio operator.

The cabin altimeters operate in the temperature range of +50 to -60°C. They are intended to indicate the "altitude" in a pressurized cabin and the difference between the cabin pressure and the outside air.

Pitot-Static System

Schematic diagrams of Pitot and static pressure systems are shown in Figs 9 and 10.

Table 1 gives the necessary data on the connection of instruments to pressure sources.

Table 1

Connection of Instruments to Pressure Sources

Nos	Name of pressure source	Connected instruments
	On Aircraft (See Fig.9)	
1	Pitot tube, front, left-side	Type КУС-1200 airspeed indicator and type МС-1 machmeter on left-seat pilot's instrument panel; type КУС-1200 airspeed indicator on navigator's instrument panel; type ССН-3 velocity head warning unit, left-side
2	Pitot tube, rear, left-side	T.A.S. transmitter of type НИ-50Б air position indicator set; speed transmitter of type ОПБ-11р optical bombsight set; type КУС-1200 airspeed indicator on operator's instrument panel
3	(Flush-type) static vent, upper, left-side	Type КУС-1200 airspeed indicator and type ВД-17 altimeter on instrument panels of navigator and operator
4	Static vent, medium, left-side	Type ССН-3 velocity head warning unit, left-side; type КУС-1200 airspeed indicator, type ВД-17 altimeter, type ВАР-30-3 rate-of-climb indicator, type МС-1 machmeter on left-seat pilot's instrument panel
5	Static vent, lower, left-side	T.A.S. transmitter of type НИ-50Б air position indicator set; speed and altitude transmitters of type ОПБ-11р optical bombsight set
6	Pitot tube, right-side	Type КУС-1200 airspeed indicator and type МС-1 machmeter on right-seat pilot's instrument panel; type ССН-3 velocity head warning unit, right-side; type КУС-1200 airspeed indicator on radio operator's instrument panel
7	Static vent, lower, right-side	Type КУС-1200 airspeed indicator, type ВД-17 altimeter, type ВАР-30-3 rate-of-climb indicator, type УВПД-3 cabin altimeter on right-seat pilot's instrument panel; type ССН-3 velocity head warning unit, right-side; type ВД-17 altimeter, type УВПД-3 cabin

[redacted]

50X1-HUM

Nos	Name of pressure source	Connected instrument
8	Static vent, upper, right-side	altimeter, and type KYC-1200 air-speed indicator on radio operator's instrument panel For type APД-54 automatic cabin-pressure regulator (if type APД-50 automatic cabin-pressure regulator is installed, the static pressure outlet will be blanked off)

Installation of Type K2-75 Speed and Altitude Recorder

1. Type K2-75 recorder is mounted between frames No.9 and No.10 on the right side (Fig.11).

The recorder is connected to the Pitot-static system in the following way:

insert tee-piece H7705-3/8 (available in the spare parts set) between the static line and the CCH-3 velocity head warning unit, connect the recorder hose to the tee-piece.

The recorder supply hoses are connected to tee-pieces 1026A50-4 cut into static line H7702-100-22 and Pitot line H7702-29-6 (the right-seat pilot's mains).

ACCESS

There are free accesses to Pitot-static instruments mounted on instrument panels. The instrument panels of both pilots and navigator flap back thus giving access to the rear side of the instruments.

Access to the Pitot-static system line is difficult in the following places:

(a) between frames Nos 5 - 9 on both sides;

(b) between frames Nos 9 - 12 on both sides. Moisture traps for collecting moisture from the Pitot-static system are located in this section on both sides of the fuselage;

(c) in the F-3 fuselage section, starboard;

(d) in the F-4 fuselage section, starboard;

(e) in the region of frames Nos 49 - 57;

(f) in the F-6 fuselage section, starboard.

To reach the line between frames Nos 5 - 9, starboard, proceed as follows:

(a) open the access panels of the right-hand engine instrument board;

(b) remove the glass heating distribution box.

To reach the line between frames Nos 5 - 9, port, do the following:

(a) flap back the left-seat pilot's instrument panel;

(b) remove the access panels of the left-hand engine instrument board.

To reach the line between frames Nos 9 - 12, starboard:

(a) remove the thyratron interrupters from the starboard rack in the operator's cabin;

(b) remove the dynamotor of the PCБ-70 aircraft radio set from the starboard rack;

To reach the line between frames Nos 9 - 12 port, remove the high-voltage rectifier of the radar bombsight.

In order to reach the line in the F-3 fuselage section, starboard, proceed as follows:

(a) open the hatch door at the bottom section of frame No.12;

(b) open the hatches of the containers of fuel tanks No.1 and No.2;

(c) remove fuel tanks No.1 and No.2;

To get at the line in the F-4 fuselage section in the region of frames Nos 27 - 34, starboard, do the following:

(a) open the hatch in the F-4 fuselage section between frames Nos 27 - 29;

(b) remove starting fuel tank H6154-120;

(c) remove air-cooler H5601-380:

(d) remove drain pipe H6152-38/1;

(e) slacken the yoke on pipe H6152-38/3 and turn the branch pipe;

(f) remove high-altitude equipment pipes H7605-0/23.5.

To reach the line in the F-4 fuselage section in the region of frames Nos 49 - 75, proceed as follows:

(a) open the hatches of the containers of fuel tanks Nos 4 and 5;

(b) remove fuel tanks No.4 and No.5;

(c) lift up the hatches in the containers of fuel tanks.

To gain access to the pipes in the F-6 fuselage section, remove the PCHY radio set equipment from the bottom section of frame No.69.

PRE-FLIGHT INSPECTION

Prior to each flight:

1. Remove protective covers with red warning flags from the Pitot tubes.
2. Take the blanking plugs out of the static vents.
3. Make visual inspection of the instrument panels (check the instruments for cover glass cracks, luminous paint for intactness, instruments for proper attachment, etc.).
4. Drain moisture from moisture traps in rainy weather.
5. Check the position of the selector cock for switching the left-seat pilot's instruments to emergency supply and the presence of safety wire with a seal on the cock. (The selector cock is installed on the left-hand engine instrument board).

The cock must be set and sealed in the NORMAL position.

Before each flight, check the efficiency of the Pitot-static system in the following manner:

1. Set the hands of two-pointer altimeters to zero and the barometric scales for the pressure check,
2. Wind up the clocks and see that they are in good repair.
3. Build up a pressure in the Pitot tubes equal to 60 - 75 mm Hg (which corresponds to a speed of 400 to 550 km/hr).
4. Connect a vacuum source of 85 - 160 mm Hg (which corresponds to an altitude of 1000 - 2000 m.) to the flush-mounted static vents.

When the Pitot-static system is serviceable the instruments will react to supply as follows:

Airspeed indicators - with pressure increase in the Pitot line the hands will rotate clockwise.

Altimeters and cabin altimeters - with vacuum increase the hands will rotate clockwise.

Rate-of-climb indicators - with vacuum increase the hands will deflect upward, while at constant vacuum of any magnitude the hands will return to zero.

5. Check to see that the CCH-3 velocity head warning unit sends a warning signal. To this end:

(a) connect in turn a pressure source of the KИУ-3 test set type to the

[redacted]

50X1-HUM

ТП-156 Pitot tubes for both the left-hand and right-hand instrument panels of the pilots;

(b) build up a pressure in the Pitot-static system equal to 169 ± 4 mm Hg. At this the СШ-51 warning lamp will light up on a respective panel of the pilot.

6. Check to see that the MC-1 machmeter sends a warning signal. To this end:

(a) disconnect the impact pressure lines from the CCH-3 velocity head warning units; blank off the pipe line ends;

(b) connect in turn a pressure source of the КПУ-3 test set type to the ТП-156 Pitot tubes for both the left-hand and right-hand instrument panels of the pilots;

(c) build up a pressure in the Pitot-static system equal to 473 ± 19 mm Hg. At this the warning lamp will light up on the pilot's instrument panel, whereas the MC-1 machmeter needle will be on the red line.

Note: If atmospheric pressure does not equal to 760 mm Hg, then during the check create a pressure of 760 mm Hg in the static system.

PROBABLE TROUBLES OF NAVIGATIONAL INSTRUMENTS AND THEIR REMEDIES

The Pitot-static system troubles include:

(a) unserviceable condition of Pitot-static instruments;

(b) leakage or clogging of the Pitot-static system proper.

To draw a conclusion on good or bad repairs of an instrument, if obvious defects are not available, check the instrument as indicated below.

Leakage of the Pitot-static system is eliminated by tightening the nipple joints and replacing the rubberized hoses (in case the latter are worn out). Clogging is eliminated by blowing the system.

Checking the Instruments

Altimeter

The altimeter check-up includes visual inspection of the instrument, checking its readings for errors and its case for tightness. The altimeter case tightness and the errors in altimeter readings can be checked in situ by means of the КПУ-3 test set and master mercury barometer.

To check the altimeter, proceed as follows:

(a) set the pointers of both the master barometer and the altimeter under test to zero;

(b) disconnect the altimeter to be checked from the aircraft static pressure line and join it to a tee-piece connected with one end to the master barometer (Fig.12) and with the other end to the КПУ-3 test set;

(c) using the КПУ-3 test set, create a rarefaction in the altimeter corresponding to definite altitudes as read off the master barometer. Take into account the altimeter instrumental corrections;

(d) record the readings of the altimeter under test in the check list and compute the errors. In doing so, take into consideration the corrections of the master mercury barometer;

(e) compare the obtained corrections of the altimeter under test with the corrections entered into the altimeter correction card.

If these corrections vary, compile a new correction card and use it in flights.

The altimeter admissible errors (total instrumental errors) are given in the altimeter Certificate. If during the altimeter check it is found out that the

altimeter errors exceed the maximum permissible values, the instrument should be replaced by a new one and the defective altimeter should be sent for adjustment to a special workshop.

After the errors and the instrument case tightness have been checked, check the lines for leakage.

Airspeed Indicator

1. The operating efficiency of the airrpeed indicator is determined by visual inspection and check test.

2. The static system is checked for leakage at normal temperature by connecting the instrument to a vacuum source. When rarefaction, corresponding to the 1200 km/hr instrument reading, is created, the vacuum source is shut off with a cock. By clamping the hose at the pipe connection of impact pressure line, watch the instrument pointers, the readings of which should not change during one minute.

3. Errors in the instrument readings are checked at normal temperature in the following manner (Fig.13):

(a) connect a pressure source to the instrument pipe connection with index P(Д) and a vacuum source to the pipe connection with index S (C);

(b) check the error value for each numbered division of the dial by building up a pressure (as read off a pressure gauge) corresponding to the dial readings;

(c) take the readings of the values to be checked both clockwise and counterclockwise at one and the same dial mark.

Maintain pressure at each dial mark being checked for not less than 1 minute.

Maximum pressure, corresponding to the 1200 km/hr dial mark, should be maintained for not less than 15 minutes. Error value will be determined by comparing the readings of the airspeed indicator under test with that of the master pressure gauge;

(d) maintain vacuum (when checking the instrument at various altitudes), corresponding to the altitude under check as read off the master barometer, taking into account the calibration card given in the Service Manual of the airspeed indicator;

(e) compare the data obtained during the check with that entered into the correction card for speed and altitude. Correct the card should any difference occur;

(f) replace the airspeed indicator if the corrections obtained exceed the permissible errors given in the instrument Certificate.

The correction cards are furnished with the speed and altitude indicators mounted on the instrument panels of navigator, navigator-radar operator, and both pilots.

The values to be determined by formula

$$V_{indic} = \delta V_{instr} + \delta V_{aer} + \delta V_{compr}$$

will be entered into column V_{indic},

where V_{indic} is I.A.S. (indicated airspeed);
δV_{instr} are the errors in instrument reading determined as stated above
δV_{aer} is an aerodynamic correction. It is a constant value for I.A.S. and equals to 13 km/hr;
δV_{compr} is a compressibility correction to be taken from tables.

[redacted]

50X1-HUM

The values to be determined by formula

$$\Delta V_{true} = \delta V_{instr} + \delta V_{aer}$$

will be entered into column ΔV_{true},

where V_{true} is T.A.S. (true airspeed), δV_{aer} at standard atmosphere will be taken from the graph (Fig.14). The data obtained for δV_{aer}, determined at an altitude of H = 8000 m., will be entered into the third column, whereas the data for δV_{aer}, determined at an altitude of H = 12,000 m., will be entered into the fourth column.

Corrections for type BД-20 altimeter will be entered into column ΔH.

It is said on the reverse sides of the tables: "Aerodynamical and instrumental corrections and compressibility corrections are accounted for in ΔV_{indic} Aerodynamical and instrumental corrections are taken into account in ΔV_{true}".

For the table of aerodynamical corrections see the aircraft Service Log.

Rate-of-Climb Indicator

The instrument check-up includes visual inspection and airtightness check. The instrument should be so tight that at a rarefaction of 380 mm Hg the rate of pressure drop during one minute would not exceed 2 mm Hg. Vacuum should be created gradually without sharp jerks of the climb indicator's pointer.

Machmeter

The instrument check-up comprises visual inspection, check of static pressure line for tightness, and check for errors in readings.

The static system should be so tight at a rarefaction of 380 mm Hg, supplied to both pipe connections, that the rate of pressure drop during one minute would not exceed 8 mm Hg.

The machmeter will be checked as shown in Fig.15.

The machmeter may be checked in situ. The machmeter is checked by the numbered divisions of the dial, namely 0 km. and at altitudes of 2, 6, 10, 14, and 18 km. To check at these altitudes use the calibration card of the machmeter Certificate. The Mach number readings will be taken both clockwise and counter-clockwise. The error value will be determined by comparing the readings of the machmeter being tested with the reading of the master pressure gauge at an altitude of 0 km. If atmospheric pressure does not correspond to 760 mm Hg, then build up a pressure of 760 mm Hg in the static system when checking the instrument at an altitude of 0 km.

To check the machmeters at an altitude of 0 km., proceed as follows (Fig.15): close cock 7, open cock 9, and using cock 1 supply the line with pressure which should be read off pressure gauges 2 and 3 and which corresponds to the dial divisions under check. In doing so maintain a pressure of 760 mm Hg as read by the barometer. Simultaneously take the machmeter readings.

To check the machmeter at different altitudes, proceed as follows: close cock 1, open cocks 7 and 9, and using cock 8 create controlled by the barometer a rarefaction, corresponding to the altitude at which the machmeter should be checked. Rarefaction should be read off barometer 4. This done, close cocks 7 and 8, and using cock 1 build up in the line pressure which should be read off pressure gauges 2 and 3, and which corresponds to the main dial divisions (according to the calibration table in the machmeter Certificate). Simultaneously take the machmeter readings.

Upon completion of the machmeter check at a given altitude, close cock 1 at the final reading of the pressure gauge, gradually open cocks 7 and 9 and then through cock 8 create a rarefaction corresponding to the subsequent altitude.

Velocity Head Warning Unit

The instrument check comprises visual inspection, checking the pitot-static system for tightness, checking the operation of warning lamp for errors, as well as checking the electric circuit insulance.

1. The static pressure line is checked for tightness at normal temperature by connecting the impact and static pressure pipe connections to a pressure source of 300 mm Hg (Fig.16). The pressure source will be blanked off with a cock. Pressure differential rate per minute should not exceed 0.5 mm Hg.

The impact pressure system (Fig.17) is checked by connecting the dynamic pressure pipe connection to the pressure source.

Airtightness should be preserved for 5 minutes at a pressure of 330 mm Hg. No pressure differential is allowed during this time.

2. Operation of the warning lamp at normal temperature is checked for errors in the following way. The warning unit is connected to the pressure source (Fig.17). By gradually increasing pressure, watch the moment the circuit is closed (the warning lamp goes on). When taking the reading counter-clockwise, gradually decrease pressure and watch the moment the circuit is open (the warning lamp goes off). The error value is determined by the readings of the master pressure gauge at the moment the warning lamp lights up.

3. Insulance of the current-carrying elements at relative humidity of 30 to 80% is checked by means of a megger, one wire of which is simultaneously connected to three pins of the plug, while the other wire of the megger is connected to the warning unit case. Insulance should not be less than 20 megohms.

Cabin Altimeters

The instrument check includes visual inspection and testing the instrument case for tightness. The instrument case is tested for tightness by connecting the case pipe connections to a vacuum source. At a rarefaction corresponding to an altitude of 8 km. as read by the instrument, the vacuum source is blanked off with a cock. Then, by clamping the hoses at the pipe connections, watch rarefaction decrease in the instrument case. The rate of pointer drop should not exceed 400 m.per minute.

Airtightness of the instrument diaphragm assembly is checked by connecting the pipe connection with index C to the vacuum source. At a rarefaction corresponding to the instrument reading of 0.6 kg/cm^2, read off the excessive pressure scale, the vacuum source is blanked off with a cock. Then, by clamping the hose at the pipe connection, watch the pointer, the reading of which should not change during one minute.

The altimeter readings are checked for errors using the method of checking the instrument case for tightness by creating rarefaction in the instrument corresponding to the readings of the dial numbered divisions under check.

Rarefaction should be maintained at each dial mark being checked for not less than 1 minute and at a maximum rarefaction - for not less than 15 minutes.

The differential pressure gauge operation should be checked in the same manner as the diaphragm assembly is checked for tightness.

To determine the instrumental errors, the altimeter readings are compared with the readings of the master mercury barometer, while the readings of the

[redacted]

50X1-HUM

differential pressure gauge are compared with the readings of the master mercury pressure gauge which are both connected to the test set.

Checking the Pitot-Static System for Tightness

Testing the Static Lines for Tightness

(a) Disconnect the rate-of-climb indicators from the static lines and blank off the ends.

(b) Insert in turn the hose, connected to the vacuum source, into the holes of all five static vents and create rarefaction (vacuum) corresponding to 700 km/hr as read off the airspeed indicator.

Note: It is allowed to check the static pressure lines for tightness with the rate-of-climb indicators connected to the line. However, in this case create vacuum, corresponding to an airspeed of 700 km/hr, and equalize it with the atmospheric pressure gradually and for not less than 2 minutes.

(c) Clamp the hose running from the vacuum source. Note the reading of the airspeed indicator pointer and then determine the rate of airspeed drop per minute.

(d) Permissible leakage of the static pressure lines corresponds to a value at which the rate of drop in the readings of the airspeed indicators does not exceed 5 km/hr per minute.

Testing the Impact (Dynamic) Pressure Line for Tightness

(a) Fit a rubber hose, connected with the pressure source, onto the Pitot tubes (see to it that the drain hole is closed). Create a pressure in the line corresponding to an airspeed of 700 km/hr read by the airspeed indicator.

(b) Clamp the hose running from the pressure source. Take the reading of the airspeed indicator pointer and then determine the rate of airspeed drop per minute.

Permissible leakage of the impact pressure line corresponds to a value at which the rate of drop in the readings of the airspeed indicators does not exceed 2 km/kg per minute.

POST-FLIGHT OPERATIONS

If during the flight the Pitot-static instruments worked without failure, then after the flight do the following:

(a) put the covers on the Pitot tubes;

(b) insert the blanking plugs into the static vents;

(c) make visual inspection of the instruments on the instrument panels (instrument glasses, attachment of instruments, etc.);

(d) drain moistness from the moisture traps in rainy weather.

Should any malfunctions be detected in the operation of the instruments during the flight, such as, for example, erroneous readings of the instruments, fluctuation of pointers, different readings of identical instruments (for instance type КУС-1200 airspeed indicators), installed on various instrument panels, etc., blow the Pitot-static system, check the system for airtightness and efficiency as indicated above.

ELECTRICAL INSTRUMENTS OF NAVIGATION EQUIPMENT

GENERAL

The electrical instruments of navigation equipment include: type ДГМК-7 remote-reading gyromagnetic compass, type ДАК-ДБ-5 remote-reading astrocompass, type НИ-50Б air position indicator, type АГБ-2 gyro horizon, type ГПК-52 directional gyro, and type ТУЭ-48 thermometer.

Type ДГМК-7 Remote-Reading Gyromagnetic Compass

The ДГМК-7 compass is a basic magnetic compass on the aircraft. It is intended to determine the magnetic and true courses of the aircraft.

The ДГМК-7 compass complete set (Fig.18) comprises:

type ПДК-3 transmitter	1 pc;
type Г-2 gyro unit	1 pc;
type У-10 amplifier	1 pc;
type УГМ master indicator (navigator's indicator)	1 pc;
repeater (additional indicator)	3 pcs;
type ВК-53РБ erecting cutout	1 pc;
type СК-8 junction box	1 pc;
type 5k fast slave button	2 pcs;
type ПТ-125 inverter	1 pc

Basic Specifications

1. Power supply	27 ± 2.7 V D.C., 36 ± 3.6 V, three-phase A.C., 400 ± 40 c.p.s.
2. Power consumed from D.C. mains	
with inverter	not over 250 W
without inverter	not over 25 W
3. Power drawn from A.C. mains	not over 110 W
4. Navigator's indicator error by the scale of compass course	not over 4°
by the scale of true course (after measurement method error, instrumental error, and compass deviation have been eliminated)	not over 1°
5. Additional error in compass readings for each minute of turn	not over 0.6°
6. Error in repeaters' readings	not over 3°
7. Permissible angle of bank of aircraft, at which the compass readings can be taken without using the fast slave button	65°
8. Temperature range (except for master indicator and repeaters)	from +50 to -60°C

[redacted]

50X1-HUM

9. Temperature range for master indicator and repeaters	from +50 to -35°C
10. Altitude limit	up to 15,000 m.
11. Compass is ready for operation	in 3 min. after power supply is on

Under unfavourable combination of flight conditions (bank with angular speed less than 0.2° per second, altitude change, longitudinal acceleration, etc.) the error in compass readings may reach 10°.

All the assemblies, which go to make the ДГМК-7 compass complete set are interchangeable. In case the ПДК-3 transmitter or master indicator are to be replaced, correct an installation error and remove deviation on 24 compass points,

Air Position Indicator НИ-50Б

The НИ-50Б air position indicator is designed for continuous indication of the aircraft position in rectangular axes, the drift being taken into account.

The НИ-50Б set (Fig.19) includes:

(a) T.A.S. transmitter - 1 piece;
(b) automatic course device - 1 piece;
(c) wind setter - 1 piece;
(d) D.R. computer - 1 piece;
(e) distribution box - 1 piece;
(f) supply-line filter СФ-2 - 1 piece;
(g) supply-line filter СФ-4 - 1 piece;
(h) inverter ПАГ-1Ф (Fig.20) - 1 piece.

Basic Specifications

1. Power supply	D.C., 27 ± 1 V, A.C., three-phase, 36 ± 3.6 V, 400 ± 40 c.p.s.
2. Range of operating speeds	300 to 1200 km/hr
3. Range of wind speed	0 to 150 km/hr
4. Altitude	up to 15,000 m.
5. Coordinate system	rectangular with any arrangement of the axes
6. Maximum error at normal temperature (altitude up to 8000 m., speed from 300 to 1100 km/hr)	5.5% max.
7. Cource indication error at 24 points (repeated readings of ДГМК-7 compass main indicator)	1° max.
8. Power consumed:	
direct current	25 W max.
alternating current in most loaded phase	35 W max.

The units of the НИ-50Б set are interchangeable. But in case of replacement of any unit except the inverter and filters, it is necessary to determine

the total error of the set and the new correction to the change-over table of the distribution box. After replacement of the distribution box or automatic course device, do not fail to adjust the zero signal anew and to match the readings of the ДГМК-7 compass main indicator with those of the НИ-50Б automatic course device.

Gyro Horizon АГБ-2

The АГБ-2 electric gyro horizon with slide indicators are designed to determine the position of the aircraft in the space relative to the true horizon, as well as to determine aircraft sideslip.

The АГБ-2 gyro horizon makes it possible to check the following aircraft acrobatics:

(1) aircraft circle turns with up to 80° banks;
(2) diving and climbing at angles up to 60°

The peculiarity of the АГБ-2 gyro horizon lies in the fact that the lateral erecting mechanism is cutout at an angular velocity of aircraft turning exceeding 0.2 deg/sec. In this connection, the АГБ-2 gyro horizon operates in conjunction with a ВК-53-РБ erecting cutout.

The gyro horizon and erecting cutout are supplied from the ПАГ-1Ф inverter.

Basic Specifications

1. Power supply	alternating three-phase current, 36 ± 3.6 V, 400 ± 40 c.p.s.
2. Error in horizon determination	1° max.
3. Time of initial erection at ambient temperature of:	
50 ± 5°C	3 min.max.
20 ± 5°C	3 min.max.
-60 ± 5°C	6 min.max.
4. Erection time from lateral and longitudinal tilts	6 to 12 min.
5. Time difference in gyro erection from opposite tilts	3 min.max.
6. Errors in circle turns and turns lasting not more than 6 min.	2°

The АГБ-2 gyro horizon units are interchangeable.

Erecting Cutout ВК-53-РБ

The purpose of the erecting cutout is to cut out the erecting mechanism of the gyro horizon when performing circle turns at an angular velocity exceeding 0.2 deg/sec.

The erecting cutout of the ДГМК-7 compass cuts out the gyro erecting unit at a turning velocity exceeding 0.3 deg/sec.

On some aircraft the cutout of the erecting unit of the gyro horizon and ДГМК-7 compass is performed with the help on one common erecting cutout which is adjusted to operate at a turning velocity exceeding 0.2 deg/sec.

[redacted]

50X1-HUM

Basic Specifications

1. Power supply	alternating three-phase current, 36 ± 3.6 V, 400 ± 40 c.p.s. direct current, 27 ± 2.7 V
2. Maximum power consumed in A.C. circuit	0.45 A per phase
3. Maximum power consumed in D.C. circuit	3 W
4. Sensitivity	0.2 or 0.3 deg/sec.
5. Time of erecting cutout lag	5 to 15 sec.
6. Maximum erecting cutout lag time asymmetry	8 sec.

Note: The erecting cutout should be so mounted on the aircraft that the twin shock-absorbing springs are located on top and index "F" on the erecting cutout casing is also on top.

Electric Resistance Thermometer ТУЭ-48

The ТУЭ-48 resistance thermometer is designed to measure the outside air temperature. The instrument includes the following units:

(a) indicator - 1 piece;
(b) transmitter - 1 piece.

Basic Specifications

1. Power supply	27 ± 2.7 V
2. Range of measurement	-70 to +150°C
3. Error of instrument does not exceed:	
at 20 ± 5°C	±5°C
at 50 ± 5°C	±7°C
at -60 ± 5°C	±8°C

The thermometer units are interchangeable.

MAINTENANCE INSTRUCTIONS

During service check the instruments of the navigation equipment before and after the flight observing the instructions given below. Check also the instruments in those cases which are specially prescribed for each instrument individually.

Pre-Flight Inspection

The pre-flight inspection comprises visual inspection of the aircraft and a check of their readiness for operation.

Visual Inspection

In inspecting the instruments visually make sure that their outer surfaces are not damaged, that the instruments are reliably secured to the instrument board or to the respective bracket and that the plug connectors or wires are reliably connected to the respective terminal blocks. See also that the safety fuses are in their places, that they are used in conformity with the diagrams and reliably secured in their seats. Check the amplifier valves for proper installation and the wires for good condition, especially in places of attachment to the plug connectors or respective terminal blocks. Make also sure that the

respective knobs and spur racks rotate smoothly, that the dials move properly, that the switches are reliably fixed in their positions, etc.

In performing visual inspection of the navigation equipment observe the following sequence:

(a) examine, on the instrument board of the left pilot, the gyro horizon, directional gyro indicator, indicator of the ДГМК-7 compass, and fast slaving button of the ДГМК-7 compass;

(b) examine, on the instrument board of the right pilot, the gyro horizon, directional gyro indicator, and the ДАК-ДБ-5 compass course indicator;

(c) examine, on the navigator's instrument board, the ДАК-ДБ-5 compass course indicator, track corrector of the ДАК-ДБ-5 compass, main indicator of the ДГМК-7 compass, fast slaving button of the ДГМК-7 compass, T.A.S. transmitter, automatic course device, wind setter and D.R. computer of the НИ-50Б air position indicator;

(d) inspect the distribution box of the НИ-50Б air position indicator and the amplifier of the ДГМК-7 compass;

(e) examine the ПАГ-1Ф, ПТ-70 and ПТ-125 inverters through which the gyro horizons, the ГПК-52 directional gyro, air position indicator НИ-50 and the ДГМК-7 compass are energized;

(f) inspect the computer of the ДАК-ДБ-5 compass;

(g) examine the transmitters of the ДАК-ДБ-5 compass, and the ДГМК-7 compass;

(h) clean the transparent hood of the ДАК-ДБ-5 compass transmitter of dust and dirt. To avoid scratches wipe the hood with a piece of soft fabric soaked in alcohol;

(i) check the colour of the silica gel crystals in the dehydrator of the ДАК-ДБ-5 compass transmitter. If the silica gel crystals have turned pink or brown, replace the dehydrator by a spare one.

Remote-Reading Gyromagnetic Compass ДГМК-7

1. Switch on the ДГМК-7 compass circuit breaker on the circuit breaker panel of the navigator.

2. Cut in the switch of the ДГМК-7 set on the upper electric board of the navigator.

3. In 2 - 3 min. after switching on power supply, press the fast slaving button located on the instrument board of the navigator or left-seat pilot and release the button after 10 - 15 sec.

4. Check the readings of the main indicator compass course scale with those of the magnetic compasses. The difference in the readings must not exceed 10°, the magnetic compass corrections being taken into account.

5. Turn the main indicator magnetic variation scale to make sure that the pointers of the auxiliary indicators repeat the readings of the main indicator pointers, the error not exceeding 3°.

6. Turn the compass transmitter card with the aid of a permanent magnet to check the movement of the main and auxiliary indicator pointers, with the fast slaving button pressed.

7. Release the slaving button and take the magnet away from the transmitter.

8. Check the follow-up rate of the navigator's indicator pointer with the slaving button not pressed. The follow-up rate should be within 1 - 4° per minute

9. Cut off the power supply from ДГМК-7 compass.

[redacted]

50X1-HUM

Air Position Indicator НИ-50Б

1. On the circuit breaker panels of the navigator switch on the circuit breakers of the ДГМК-7 compass and НИ-50Б air position indicator.

2. On the upper electric board of the navigator put the ДГМК-7 compass switch and two switches of the НИ-50Б indicator in position ON.

3. In 5 minutes after the line has been energized, turn the magnetic variation spur rack of the ДГМК-7 compass main indicator to make sure that the pointe of the automatic course device follows the readings of the main indicator; then out out the ДГМК-7 compass power supply switch. When this is done, the pointer of the automatic course device must not shift. This will indicate to the fact, that the zero signal has been adjusted correctly. Should the pointer of the automatic course device shift, use a screw-driver to turn the adjustable resistor screw located in the distribution box to the left (if viewed from the terminal blocks, See Fig.21). The screw must be turned until such a position is found at which movement of the pointer ceases.

4. Set the chart angle on the automatic course device just by 45° less than the reading of the automatic course device pointer. Set the wind speed knob of the wind setter to zero.

5. Use a КПУ-3 testing device or a special pressure producer which belongs to the УПН-50 testing installation to create gradually a pressure in the dynamic system of the T.A.S. transmitter corresponding to a speed of 1150 km/hr. As the speed changes from 300 to 1150 km/hr check the rotation of the D.R. computer check indexes, the turning rate of the check indexes should change smoothly without sharp jumps or binding.

6. At a speed of 1150 km/hr change gradually the value of the chart angle of the T.A.S transmitter from 0 to 360°.

The turning rate of the D.R. computer check indexes should change gradually.

7. Reduce the pressure in the dynamic system of the T.A.S. transmitter to zero.

8. Shift the wind speed knob on the wind setter gradually from zero to division 150 km/hr. The turning rate of the D.R. computer check indexes should change smoothly.

9. Change gradually the wind direction on the wind setter from 0 to 360°. The turning rate of the check indexes should change smoothly.

10. Switch off A.C. and D.C. supply from the НИ-50Б air position indicator.

Gyro Horizon АГБ-2

1. Switch on the power supply of the gyro horizon.

2. Turn the starting handle located on the front of the gyro horizon to the left. This done, a red bulleye should appear in the zone of the port.

Not later than 3 min. after energizing the instrument, the horizon line should assume the horizontal position, the permissible deviation being ±1°.

Make sure that the skid indicator fluid contains no air bubbles.

Note: With the ambient temperature below zero, the gyro erecting time may increase up to 6 min.

Electric Turn Indicator ЭУП-53

1. Switch on the power supply of the turn indicators.

2. Wait 2 - 3 minutes, then press against the edge of the pilot's instrument board to turn it about its vertical axis as far as the shock absorbers

permit. When this is being done, the moving index of the turn indicator should deflect from its central position.

3. Make sure that the skid indicator fluid contains no air bubbles.

4. Switch off the power supply from the instrument.

Postflight Inspection

The postflight inspection of the navigation equipment comprises the following operations:

1. Examine visually the units of the navigation equipment in the same way as during preflight inspection.

2. Cover the transparent hood of the ДАК-ДБ-5 compass transmitter with a protective casing.

3. Check the colour of the silica gel of the ДАК-ДБ-5 compass transmitter. If the silica gel crystals have turned pink or brown, replace the dehydrator with a spare one, since pink or brown silica gel is not capable of absorbing moisture. The silica gel can be reconditioned by drying, for which purpose it must be poured on a metal sheet and dried on a moderate fire until it turns blue again. After the dehydrator is placed on the transmitter, do not fail to open the hole in the dehydrator bottom.

In addition to the visual inspection of the instruments, find out the causes of the defects which have been revealed in the flight. Sometimes the defects and their causes may be found in the course of the check carried out in the sequence adopted for the preflight inspection. Therefore this inspection must be performed immediately after the flight. Sometimes a more careful check is required. The scope and sequence of this check is described below.

Besides, trouble-shooting is facilitated by the fault finding chart which contains the most frequent defects of the navigation instruments, their causes and remedies.

Checking the Instruments for Correspondence to Their Basic Specifications

Such a check is to be carried out as soon as you begin to doubt whether the readings of some instruments are correct, and not less than once every three months.

Taking into consideration that special installations for checking some instruments may not always be available under service conditions, the checking method has been so worked out as to reduce the number of the instruments to be removed from the aircraft to the minimum and to carry out the entire check directly on the aircraft.

When special testing equipment is available it is used for checking the instruments in accordance with the Instructions of the respective installation (if available) or in compliance with the given Instructions.

In addition to the method of checking the instruments for correspondence to their Specifications, this Section contains some special instructions on mounting, care and maintenance of the navigation equipment instruments.

Remote-Reading Gyromagnetic Compass ДГМК-7

1. Disconnect the plug connectors from the transmitter and check, using a megger, the insulance between the terminals of the plug connectors and the transmitter body. The insulance must not be below 20 megohms.

2. After having slightly tapped against the cover of the transmitter casing,

[redacted]

50X1-HUM

note the reading of the transmitter scale, then use a permanent magnet to deflect the transmitter card by 10° to the right and take away the magnet. Take again the readings off the scale of the transmitter. The difference between the last and first readings will be the card lag.

In the same way check the lag of the transmitter card when the latter is deflected to the left. The absolute lag value of the transmitter card must not exceed 7°.

3. Disconnect the double-terminal plug connector from the transmitter.

4. Disconnect the plug connector from the gyro unit and check the insulance between the following pins of the gyro unit plug:

(a) the insulance between pins 3 and K must be from 100 to 130 ohms;

(b) the insulance between pins Ж and M must be from 400 to 600 ohms;

(c) the insulance between pins A and Б , Б and B, A and B should be from 355 to 586 ohms;

(d) the insulance between pins 3 and Ж should be from 450 to 580 ohms.

5. Using a megger check the insulance between the following jacks of the plug located at the end of the wire bundle: A and Ж , A and M, A and Г , as well as between jacks A and the aircraft framework.

The insulance must be not less than 1 megohm.

6. Check the insulance between jacks A and Б , Б and B, A and B of the gyro unit plug located at the end of the wire bundle. The insulance should be equal (accurate within ±20 ohms) and at least 100 ohms each.

7. Connect the plug connectors to the gyro unit and to the transmitter.

8. Supply power to the ДГМК-7 compass.

9. Wait 2 and 3 min. and press the fast slaving button. Release the button after 15 - 20 sec. The readings of the compass course scale of the main indicator and the scale readings of the magnetic transmitter should agree within 3°, whereas the readings of the auxiliary indicators should agree with those of the main indicator also accurate within 3°.

10. Using a permanent magnet turn the transmitter card and check, every 30 - 40°, to see that the readings of the compass course scale and those of the repeaters correspond to the readings of the transmitter scale and main indicator pointer respectively.

With the compass operating, oscillation of the main and auxiliary indicator pointers within ±0.5° is permissible.

11. Check the follow-up rate of the navigator's main indicator pointer with the slave button not pressed. The follow-up rate must be within 1 - 4° per minute.

<u>CAUTION</u>: 1. It is strictly prohibited to use in the junction box a safety fuse other than type ПК-0.15 A.

2. Prior to cutting the compass into the electric mains after some units have been replaced or defects in the aircraft diagram have been eliminated, do not fail to check the insulance in conformity with Item 6 of the given Section.

3. Prior to energizing the compass make sure that plug connectors Nos 8 and 11 of the ОПБ-11р sight computer are not confused to avoid failure of the compass.

Air Position Indicator НИ-50Б

Checking total error of the set. Prior to checking the set for total error, make sure that the static and impact pressure lines of the T.A.S.

nsmitter are airtight. Check also the zero signal and serviceability of the

1. The set is checked for airtightness as follows:

(a) use a КПУ-3 test set to create a pressure in the T.A.S transmitter

namic system corresponding to a speed of 700 km/hr. Pressure drop in the

stem must not exceed 2 km/hr per one minute;

(b) use a КПУ-3 test set to create a vacuum in the T.A.S. transmitter

atic system corresponding to a speed of 700 km/hr. With pressure supply cut

f, leakage must not exceed 5 km/hr per min.;

2. The zero signal and the serviceability of the set are checked in

cordance with the method adopted for preflight inspection.

3. The total error in the set readings is determined at four different

urses selected so that the error may be found by one of the selected courses

the intervals from 0 to 90°, from 90 to 180°, from 180 to 270° and from 270

360°.

4. Switch on the A.C. and D.C. power supply of the compass and НИ-50Б air

sition indicator.

5. Measure the voltage across terminals B' of the distribution box of the

НИ-50Б air position indicator. The voltage is to be measured with a voltmeter

ving reading corrections within the range of 24 to 30 V. Taking the corrections

to consideration, ensure exactness of voltage readings within ±0.1 V.

6. Switch off the power supply from the НИ-50Б air position indicator

d the compass. Change over the internal wiring diagram of the indicator dis-

ibution box to a voltage of 27 V.

7. Switch on the power supply of the НИ-50Б air position indicator and

mpass.

8. Create a pressure in the T.A.S. transmitter dynamic system corresponding

a speed of 700 km/hr, which is to be checked by the КУС-1200 airspeed

dicator having corrections for indication errors.

When applying the pressure, take into consideration the corrections for

mospheric pressure given in Table 2.

Table 2

Speed of 700 km/hr with Corrections for Atmospheric Pressure

Atmospheric pressure, mm of mercury	Airspeed, km/hr
1	2
- 720	718.7
- 725	716.45
- 730	714.25
730 - 735	715.0
735 - 740	709.8
740 - 745	707.6
745 - 750	705.4
750 - 755	703.2
755 - 760	701.05

[redacted]

50X1-HUM

1	2
760 - 765	698.95
765 - 770	696.8
770 - 775	694.7
775 - 780	692.65
780 - 785	690.6
785 - 790	688.55

9. Place a permanent magnet closely to the compass transmitter and turn the main indicator magnetic variation spur rack to set the course automatic device scale to a course equal to 45° or divisible by 10 deg. within an interval of 0 to 90°.

10. Set the wind setter to a wind speed of 60 km/hr and a direction divisible by 10° or equal to 45°.

11. Set the chart angle on the course automatic device and on the wind setter to zero.

12. Switch off the D.C. supply from the HM-50Б air position indicator and set the D.R. computer pointers to zero. Send the pointers to zero position by moving them in a direction opposite to their usual movement (in this case - counterclockwise).

13. Switch on the D.C. supply of the HM-50Б air position indicator and start simultaneously a stopwatch.

14. Wait 8 min. and 34 sec., then switch off the D.C. power supply of the HM-50Б air position indicator and take the readings of north and east pointers of the D.R.computer.

<u>Notes:</u> 1. In case the voltage across terminals B of the distribution box is other than 27 ± 0.1 V and if it is impossible to bring it to this value, multiply the testing time (8 min.34 sec.) by coefficient K:

$$K = \frac{27}{V_{ind}}$$

where V_{ind} - is the voltage measured across terminals B of the indicator distribution box.

2. During the test maintain a pressure in the dynamic system of the course automatic device which corresponds to a speed of 700 km/hr.

15. Using Table 3 determine the rated changes in the D.R. computer pointer readings for a flight in calm weather.

16. Using Table 4 determine the rated changes in the D.R. computer pointer readings depending on the direction of the wind.

17. Determine the rated changes in the readings of the north pointer L_N and east pointer L_E for a flight with drift correction introduced.

$$L_N = 1_N + L'_N \ ;$$

$$L_E = 1_E + 1'_E \ .$$

Values l_N, 1_E, $1'_N$ and $1'_E$ should be taken with the signs indicated in Tables 3 and 4.

Table 3

Rated Changes in Readings of Pointers l_N and l_E Depending on Course in Calm Weather

Course	0°	10°	20°	30°	40°	45°	50°	60°	70°	80°
l_N km. l_E km.	+100 0	+98,5 +17.4	+94 +34,2	+86,6 +50	+76,6 +64,3	+70.7 +70.7	+64.3 +76.6	+50 +86,6	+34,2 +94	+17,4 +98,5
Course	90°	100°	110°	120°	130°	135°	140°	150°	160°	170°
l_N km. l_E km.	0 +100	−17,4 +98,5	−34,2 +94	−50 +86,6	−64,3 +76,6	−70,7 +70,7	−76,6 +64.3	−86,6 +50	−94 +34,2	−98,5 +17.4
Course	180°	190°	200°	210°	220°	225°	230°	240°	250°	260°
l_N km. l_E km.	−100 0	−98,5 −17,4	−94 −34,2	−86,6 − 50	−76,6 −64,3	−70.7 −70.7	−64.3 −76.6	−50 −86,6	−34,2 −94	−17,4 −98.5
Course	270°	280°	290°	300°	310°	315°	320°	330°	340°	350°
l_N km. l_E km.	0 −100	+17.4 −98.5	+34.2 −94	+50 −86,6	+64.3 −76,6	+70,7 −70,7	+76,6 −64,3	+86,6 −50	+94 −34.2	+98.5 −17,4

l_n – change in readings of north pointer

l_E – change in readings of east pointer

Table 4

Rated Changes in Readings of Pointers l'_N and l'_E Depending on Wind Direction

Course	0°	10°	20°	30°	40°	45°	50°	60°	70°	80°
l'_N km. l'_E km.	+8,6 0,0	+8,4 +1,5	+8 +2,9	+7,4 +4,3	+6,6 +5,5	+6,1 +6,1	+5,5 +6,6	+4,3 +7,4	+2,9 +8	+1,5 +8.4
Course	90°	100°	110°	120°	130°	135°	140°	150°	160°	170°
l'_N km. l'_E km.	0 +8.6	−1,5 +8,4	−2,9 +8	−4,3 +7,4	−5,5 +6,6	−6,1 +6,1	−6,6 +5,5	−7,4 +4,3	−8 +2,9	−8,4 +1,5
Course	180°	190°	200°	210°	220°	225°	230°	240°	250°	260°
l'_N km. l'_E km.	− 8,6 0	−8,4 −1,5	−8 −2,9	−7,4 −4,3	−6,6 −5,5	−6,1 −6,1	− 5,5 −6,6	−4,3 −7,4	−2,9 −8	−1,5 −8,4
Course	270°	280°	290°	300°	310°	315°	320°	330°	340°	350°
l'_N km. l'_E km.	0 −8,6	+1.5 −8,4	+2,9 −8	+4.3 −7,4	+5,5 -6,6	+6,1 −6,1	+6,6 − 5,5	+7,5 −4.3	+8 −2,9	+8,4 −1,5

l'_N – change in readings of north pointer

l'_E – change in readings of east pointer

[redacted]

50X1-HUM

18. By comparing the actually obtained changes in the D.R. computer readings L'_N and L'_E with the rated values L_N and L_E determine the absolute errors in the readings of the D.R. computer north pointer ΔL_N and east pointer ΔL_E.

$$\Delta L_N = L'_N - L_N ;$$

$$\Delta L_E = L'_E - L_E .$$

19. Using the graph presented in Fig.22 determine covered distance L by the rated indications of the D.R. computer, i.e. L_N and L_E.

For example, a change in the readings of the north pointer L_N is 82 km. and that of the east pointer L_E is 78 km. Lay off 82 and 78 km. on the axes L_N and L_E respectively. From these points erect perpendiculars to the axes until they mutually intersect. Lay off the distance from the intersection point to the beginning of the coordinates on one of the coordinate axes (in this example it is axis L_E). This distance will determine in the adopted scale the covered distance L in km. (in the given example the covered distance is 114 km.).

20. Making use of the graph given in Fig.23 determine the absolute error ΔL by the covered distance.

For instance, the absolute error of the north computer ΔL_N is 6.15 km. and that of the east computer ΔL_E is 4.7 km.

From these points draw lines until they mutually intersect.

Lay off the distance from the intersection point to the beginning of the coordinates on one of the axes and determine the absolute error of the set (in this example the absolute error of the computer ΔL is 7.75 km.).

21. Determine the total error of the set Δ from the formula:

$$\Delta = \frac{\Delta L}{L} \, 100\% \; .$$

22. Following the same routine determine the complete errors of the set at courses within the intervals from 90 to 180°, from 180 to 270° and from 270 to 360°.

The total errors obtained during the tests should be within the limits given in Table 5.

Table 5

Permissible Amounts of Total Errors

Ambient air temperature, °C	Total error of НИ-50Б set, %					
	altitude 0		altitude above 0 to 8000 m.		altitude from 8000 to 12,000 m.	
	speed 300 km/hr	speed from 300 to 1000 km/hr	speed up to 1100 km/hr	speed up to 1200 km/hr	speed up to 1100 km/hr	speed up to 1200 km/hr
1	2	3	4	5	6	7
+20 ± 5	7	5	5.5	7.5	6.5	7.5
+50 ± 5	9	8	-	-	-	-
-60 ± 5	9	8	8	9	8	9

Should the total error of the set exceed the permissible value, determine the correction to the inner diagram change-over table of the indicator distribution box.

Determination and Account of Correction to Inner Diagram Change-Over Table of Indicator Distribution Box

"Correction" is the value which is to be algebraically added to the value of the air position indicator supply voltage (which is measured across terminals B of the distribution box) in order to determine the corrected voltage value and to change over the distribution box inner diagram correspondingly.

The correction is accounted for by the formula:

$$V_{cor} = V_{supply} \pm \Delta V \text{ (volts)}$$

where: V_{cor} - is the corrected voltage value, for which the distribution box inner diagram is to be changed over;
V_{supply} - is the supply voltage to the air position coordinator, as measured across the terminals B of the distribution box;
ΔV - is the correction, volts.

If it is required, depending on the total errors obtained during the check, to increase the change in the readings of the D.R. computer pointers, take the correction with the sign "-", and if it is required to decrease the value, take the correction with the sign "+".

The correction value must be divisible by 0.5 V. A correction value equal to 0.5 V changes the readings of each D.R. computer pointer by 1.85%.

After determining the amount of correction for voltage, it is recommended to make sure that the selected correction to be introduced is correct, for which purpose correct algebraically the previously obtained values L'_H and L'_E (See Item 18), at which the total error proved to be in excess of the permissible value, by the value ±3.7 ΔV in %, where ΔV is the correction (in volts) to be introduced.

Determine by the new corrected values L'_H and L'_E the absolute error values of the north pointer ΔL_N and east pointer ΔL_E (See Item 18) and use them to calculate the total error of the set (See Items 20, 21 and 22), which will be obtained after this correction has been introduced.

If the calculated total error meets the requirements, change over the inner diagram of the distribution box in accordance with the selected correction and check the set again.

In case the set total error exceeds the permissible value and cannot be decreased to the value indicated in Table 5 no matter what value ΔV is taken, it is required to check each unit of the set separately. The units must be checked on a УНИ-50 installation only employing the method described in the Operating Instructions of this installation. On detecting a faulty unit, replace it and check the set again for the total error and correction to the change-over Table of the distribution box inner diagram. In changing over the diagram observe the instructions which are placed on the inner side of the distribution box cover.

[redacted]

50X1-HUM

Checking the ДГМК-7 and НИ-50 Instruments for Synchronous Operation

1. Switch on A.C. and D.C. power supply to the ДГМК-7 compass and НИ-50Б air position indicator.

2. Wait at least 5 minutes, then adjust the zero signal employing the method described in Section "Preflight Check".

3. Place a permanent magnet closely to the compass transmitter and rotate the magnetic variation spur rack of the main indicator to check the readings of the automatic course device for conformity to those of the compass main indicator at headings 0, 15, 30°, etc., every 15°. The readings of the automatic course device must not differ from those of the main pointer by more than 1°. Otherwise, match the readings by turning the respective deviation screws which are accessible through the holes in the rear wall of the automatic course device (Fig.24).

Gyro Horizon АГБ-2

The АГБ-2 gyro horizon is checked on type УПГ-48 installation ensuring a turn of the gyro horizon with respect to the three mutually perpendicular axes: vertical, longitudinal and lateral.

The horizontal base of the turning table should be checked against a level. In addition to the УПГ-48 installation, checking of the АГБ-2 gyro horizon requires the employment of an electric panel whose diagram is presented in Fig.25.

The check is performed in the following sequence:

1. Place the gyro horizon on the turning table and connect it to the electric panel.

2. Switch on the power supply to the gyro horizon and start a stopwatch at the same time.

3. The line of the horizon should assume the horizontal position (accurate within ±1°) not later than three minutes after the power supply has been switched on.

4. In 5 or 6 min. after having energized the gyro horizon measure the voltage between the inverter phases. The voltage should be 36 ± 1 V.

If the voltage is other than specified, adjust it by changing the voltage of the supply inverter, type ПАГ-1Ф.

5. Match the miniature airplane with the fixed indices on the front flange of the instrument.

6. Turn the casing of the gyro horizon about the longitudinal and lateral axes to match the horizon line with the miniature airplane.

With the instrument in this position, tap it slightly to make sure that the slip indicator ball is located between the two central marks made on the slip indicator; see that there are no air bubbles in the slip indicator fluid. Remove air bubbles, if any, by turning the instrument casing clockwise about the longitudinal axis.

7. In 5 minutes after complete erection of the gyro match the vertical mark on the gyro horizon spherical shield with the zero division on the instrument bank scale. The gyro horizon error is characterized by the misalignment between the miniature airplane and the horizon line. This error must not exceed ±1°.

8. Turn gradually the gyro horizon casing with respect to the longitudinal axis until the gyro unit contacts the rest to create a lateral tilt exceeding 80°; in this case the tilt of the gyro unit will be in the longitudinal direction. Then return the instrument casing to initial position and turn it through 90°

with respect to the vertical axis. Thus, the longitudinal tilt of the gyro unit is transferred into a lateral tilt (with respect to the gyro horizon casing). The lateral tilt in this case should be at least 30°. If the tilt is less than 30°, repeat tilting the gyro as indicated above.

9. Turn the gyro horizon casing through 30° with respect to the longitudinal axis (by the scale available on the turning table) in the same direction in which the gyro is tilted.

10. At the moment the horizon line coincides with the miniature airplane start the stopwatch.

The time from the moment the stopwatch is started to the moment the gyro returns to its initial position is considered as the gyro erection time from the lateral tilt.

11. Check the time required for gyro erection from the opposite lateral tilt in the same way.

The gyro erection time from lateral tilts must not exceed 4 - 8 min.

12. Check the gyro for erection time from longitudinal tilt. A longitudinal tilt is established by creating a lateral tilt through 30° and turning subsequently the instrument casing through 90° with respect to the vertical axis.

The time required by the gyro to erect from longitudinal 30° tilts should be within 6 - 11 min. The difference in the erection time when the gyro erects from opposite tilts must not exceed 3 min. When erecting from a longitudinal tilt the gyro must not tilt in the opposite direction by more than 3°, and when erecting from a lateral tilt its pitch must not exceed 4°.

Erecting Cutout, Type ЭК-53РБ

The erecting cutout may be checked on type УПГ-48 installation used to check gyro instruments. The check is performed with the aid of an electric panel whose diagram is presented in Fig.26. The erecting cutout is supplied from the ПАГ-1Ф inverter, which should be so adjusted as to produce a linear voltage of 36 ± 1 V, 400 ± 10 c.p.s. in 3 - 5 min. after the inverter is energized with D.C. 27 ± 1 V current. The 3 - 5 minute time period is required for placing the gyro under working load (well-racing gyro , warmed up instrument).

The voltage and frequency are regulated by means of a variable resistor located in the inverter baseplate.

The erecting cutout is checked as follows:

1. Place the erecting cutout along with the shock absorbers on the turning table of the УПГ-48 installation and connect it to the electric panel.

2. Set up a turning rate for the installation table of 0.2 or 0.3° per sec. depending on the adjustment of the erecting cutout to be checked. This adjustment value is to be found in the cutout Certificate.

3. Turn switch 2 to supply power and start simultaneously a stopwatch. Determine the time during which current in phase 1 will drop to 0.5 A. As this is done, the circuit of button 9 must be open. This time period must not exceed 3 min.

4. In 5 min. after power has been switched on, check the current in phase 1. The current must not exceed 0.45 A.

5. Use selector switch 11 to connect terminals А and Б of the electric panel to terminals 6 and 7 of the erecting cutout. Make sure, with the aid of an ohmmeter, connected to terminals А and Б , that the latter are disconnected through the inner circuit of the erecting cutout.

In connecting terminals А and Б respectively to terminals 8, 9, 10, 11 and 12, 13 of the erecting cutout plug connector, terminals А and Б should be shorted.

[redacted]

50X1-HUM

6. Make the installation table rotate at a rate of 0.2 or 0.3° per sec. starting the stopwatch simultaneously.

The time elapsed from the moment the table was started to the moment terminals A and Б close if they are connected to terminals 6 and 7 or open if they are connected to terminals 8 and 9; 10, 11 and 12, 13 of the erecting cutout plug connector must be within 5 to 15 sec.

7. Not earlier than 30 sec. after checking the erecting cutout for its functioning time as it is rotated in one direction, check its functioning time when the cutout is turned in the other direction.

The difference between the time found under Item 6 and that found under Item 7 must not exceed 8 sec.

Resistance Thermometer, Type ТУЭ-48

The thermometer indicator is checked for accuracy of operation by cutting it in a circuit equivalent to the resistance thermometer (Fig.27) in which the transmitter is replaced by any resistance box, that will permit to cut into the circuit resistance equivalent to the resistance of the transmitter accurate within 0.1 ohm.

The transmitter resistance values for various temperatures are given in Table 6.

Table 6

Transmitter Resistance versus Measured Temperatures

Temperature, °C	Resistance, ohms	Temperature, °C	Resistance, ohms
-70	68.36	50	108.81
-60	71.06	60	112.78
-50	73.86	70	116.96
-40	76.86	80	121.22
-30	79.96	90	125.56
-20	83.16	100	129.96
-10	86.56	110	134.41
-0	90.26	120	138.96
10	93.76	130	143.56
20	97.36	140	148.36
30	101.06	150	153.26
40	104.86	160	158.26

The error of the instrument is determined by the difference between the indicator reading and the actual temperature corresponding to the resistance cut into the circuit.

The indicator error at an ambient temperature of +20 ± 5°C must not exceed ±5°C.

ENGINE INSTRUMENTS AND GAUGES

GENERAL

The set of engine instruments and gauges included: T35-2 and T3-45 tachometers, TBГ-11 and TCT-29 thermometers, ЭДМУ-3 pressure gauge and ЭМИ-3Р engine gauge unit. This section contains also information on type ТНТ-13 thermometer of air temperature in the wing de-icing system duct.

Remote-Reading Electric Tachometers T35-2 and T3-45

The T35-2 and T3-45 tachometers are designed for continuous measurement of the aircraft engine and turbostarter shaft RPM respectively. Each of the instruments is a set consisting of a generator and single-pointer indicator.

Specifications

Tachometer T35-2

1. Range of speed	from 0 to 5000 r.p.m.
2. Division value	50 r.p.m.
3. Instrument error should not exceed:	
(a) at +20 ± 5°C	
500 - 3500 r.p.m.	±1% (±50 r.p.m.)
3500 - 4800 r.p.m. (inclusively)	±0.5% (±25 r.p.m.)
4800 - 5000 r.p.m.	±1% (±50 r.p.m.)
(b) at +50 ± 5°C	
500 - 3500 r.p.m.	±1.6% (±80 r.p.m.)
3500 - 4800 r.p.m. (inclusively)	±0.8% (±40 r.p.m.)
4800 - 5000 r.p.m.	± 1.6% (±80 r.p.m.)
(c) at -60 ± 5°C	
500 - 3500 r.p.m.	±2.6% (±130 r.p.m.)
3500 - 4800 r.p.m. (inclusively)	±1.3% (±65 r.p.m.)
4800 - 5000 r.p.m.	±2.6% (±130 r.p.m.)

Tachometer T3-45

1. Range of speed	from 400 to 3500 r.p.m.
2. Division value	50 r.p.m.
3. Error at ambient temperature of +20 ± 5°C at divisions 600, 1000, 2000, 2600 and 3000 r.p.m.	±35 r.p.m.

Exhaust Gas Thermometer TBГ-11

The TBГ-11 exhaust gas thermometer is intended to measure the mean temperature of the gases leaving the air-jet engine nozzle. It is a thermal electric set comprising the following units:

indicator TBГ-1	1 piece
transmitter, composed of:	
(a) thermocouples T-1	4 pieces
(b) connecting wires	1 set

[redacted]

50X1-HUM

Basic Specifications

1. Measurement range	300 – 900°C
2. Range of operating temperatures	450 – 750°C
3. The reading error of the set must not exceed:	
(a) at +20 – 5°C	
450 – 640°C	±15°C
650 – 750°C	±12°C
on remaining portion of scale	±25°C
(b) at +50 ± 5°C	
450 – 750°C	±18°C
on remaining portion of scale	±36°C
(c) at -60 ± 5°C	
450 – 750°C	±22°C
on remaining portion of scale	±44°C
4. Resistance of thermometer external circuit at ambient temperature of -20 ± 5°C	2.5 ± 0.1 ohms

The indicators and transmitters are interchangeable within one graduation group. The connecting wires are interchangeable as a single set.

Exhaust Gas Thermometer TCT-29

The TCT-29 exhaust gas thermometer is designed for measuring the temperature of the exhaust gases leaving the air-jet engine turbostarter.

The instrument is a thermal electric set comprising the following units:

indicator TCT-2	1 piece
thermocouple T-9	1 piece
connecting wires	1 set

Basic Specifications

1. Range of measurement	0 – 900°C
2. Range of working temperatures	600 – 800°C
3. Reading error of the set must not exceed:	
(a) at +20 ± 5°C	
600 – 800°C	±20°C
on remaining portion of scale	±35°C
(b) at +50 ± 5°C	
600 – 800°C	±30°C
on remaining portion of scale	±55°C
(c) at -60 ± 5°C	
600 – 800°C	±40°C
on remaining portion of scale	±75°C
Error within 0 – 200°C	not checked
4. Resistance of external circuit at +20 ± 5°C	9 ± 0.06 ohms
5. Indicator pointer oscillations with the engine running	±10°C max

The indicators, thermocouples and wire set are interchangeable.

Thermoelectric Thermometer TЦT-13

The TЦT-13 thermometer is employed for measuring the air temperature in the wing de-icing system duct. The instrument set is composed of the following units:

– thermocouple	1 piece
– indicator	1 piece
– compensating wires	1 set

Basic Specifications

1. Range of measurement	from -50 to +350°C
2. Reading error of set must not exceed:	
(a) at +20 ± 5°C	
100 – 260°C	±8°C
on remaining portion of scale	±16°C
(b) at +50 – 5°C	
100 – 260°C	±13°C
on remaining portion of scale	±26°C
(c) at -60 ± 5°C	
100 – 260°C	±18°C
on remaining portion of scale	±36°C
3. Resistance of thermometer external circuit	7.15 ± 0.05 ohms

The indicator and set of compensating wires are interchangeable.

Three-Pointer Electric Engine Gauge Unit ЭМИ-3P

The ЭМИ-3P engine gauge unit is used for remote check of jet engine operation. The purpose of the ЭМИ-3P gauge unit is to check:

(a) oil pressure in engine oil line;
(b) fuel pressure in idling rating manifold;
(c) oil temperature at engine inlet.

The ЭМИ-3P set (Fig.28) consists of the following units:

– oil pressure pick-up unit	1 piece
– fuel pressure pick-up unit	1 piece
– temperature pick-up unit	1 piece
– electric remote indicator	1 piece

The indicator comprises three metering gauges in one housing, each of which constitutes along with its pick-up unit an independent metering circuit.

Basic Specifications

1. Power supply	27 V ± 10%
2. Range of measurement:	
oil pressure gauge	from 0 to 10 kg/sq.cm.
fuel pressure gauge	from 0 to 100 kg/sq.cm.
oil thermometer	from 50 to +115°C
3. Maximum reading errors at ambient air temperature of +20 ± 5°C:	
(a) oil pressure gauge at divisions 0, 2, 4, 6 and 8	±0.4 kg/sq.cm.
at division 10	±0.6 kg/sq.cm.

[redacted]

50X1-HUM

(b) fuel pressure gauge at divisions 10, 20, 40, 60, 80 and 90 .... ±3 kg/sq.cm.
at divisions 0 and 100 .... ±5 kg/sq.cm.

(c) oil thermometer at divisions -40, 50, 0, 100 and 130 .... ±4°C
at divisions -50 and +150 .... ±6°C

4. Permissible overload:
for oil pressure gauge pick-up unit .... 15 kg/sq.cm.
for fuel pressure gauge pick-up unit .... 120 kg/sq.cm.

The units of the ЭМИ-3Р set are interchangeable.

Remote-Reading Electric Pressure Gauge ЭДМУ-3

The ЭДМУ-3 pressure gauge is used to check the fuel pressure before the high-pressure fuel pumps. It is a set comprising a pressure pick-up unit and a remote-reading electric indicator.

Basic Specifications

1. Supply voltage .... 27 ± 2.7 V
2. Range of measurement .... 0 - 3 kg/sq.cm.
3. Working portion .... 0.6 - 2.4 kg/sq
4. Maximum error on working portion at ambient temperature of +20 ± 5°C .... 4% from measurement limit
5. Permissible overload .... up to 4.5 kg/sq

The units of the ЭДМУ-3 set are interchangeable.

MAINTENANCE INSTRUCTIONS

In service the engine intruments and gauges should be checked before flight in compliance with the methods described below, as well as in cases specially specified.

Preflight Inspection

The preflight inspection of the engine instruments and gauges is confined to visual examination of the units belonging to the sets of the instruments and gauges.

During visual examination of the instruments make sure whether they are n damaged on the outside, that they are reliably secured to the instrument boards or respective attachment brackets. See also that the plug connectors are well connected and the wires are properly terminated. Check to see that the wires are not broken at places of termination, and that the compensating wires make a reliable connection at their joints, etc.

Checking the Instruments for Correspondence to Their Basic Specifications

This check is to be carried out as soon as doubt arises as to the correctness of operation of some instruments, and at least once every three months.

In addition to the description of this check, the section contains a Tabl dealing with the most frequent faults, their causes and remedies.

Remote-Reading Electric Tachometers Т95-2 and ТЭ-45

Check the tachometers in service on a special tachometer installation at east once every 6 months. The check consists in comparing the readings of the achometer under test with those of a reference tachometer. The reading error f the tachometer must not exceed the values given in the "Basic Specifications" or the Т95-2 and ТЭ-45 tachometers.

Thermometer ТВГ-11

The connecting wires are checked for resistance as follows:

1. Disconnect the plug connector from the indicator.
2. Using additional wires connect the terminals of the disconnected plug onnector to terminals R_x of the ММВ-49 electric bridge or some other bridge nsuring measurement of resistance within the range of 0 to 10 ohms with an xactness of ±0.01 ohm.
3. Determine the resistance R_{total} of the wires connected to terminals R_x of the bridge.
4. Determine the resistance R_{add} of the wires by means of which the plug onnector terminals have been connected to the terminals R_x of the bridge.
5. Determine the resistance of the thermocouple connecting wires from the ormula:

$$R_{wire} = R_{total} - R_{add}$$

here R_{wire} - resistance of thermocouple connecting wires.

The resistance of the ТВГ-11 thermometer connecting wires at ambient emperature of +20 ± 5°C should be 2.5 ± 0.1 ohms. If this resistance is other han specified, it must be adjusted by changing the value of the series resistor laced inside the socket of the indicator plug connector.

The indicator is checked for reading errors as follows:

Cut the indicator into an electric circuit equivalent to the thermoelectric hermometer and employing a dry cell with a potentiometer as a source of electromotive force (See Fig.29).

The voltage fed to the indicator terminals, is measured with the aid of millivoltmeter of an accuracy class not less than 1.0. When performing this heck, it is well to bear in mind that the resistance of the wires connecting he reference millivoltmeter to the indicator under check depends on the ambient emperature as well as on indicator scale division to be checked. This resistance must correspond to the values indicated in Table 7.

Table 7

Wire Resistance as Function of Temperature and Indicator Scale Division to Be Checked

Scale division to be checked	Resistance of external circuits, ohms, at ambient temperatures of		
	+20°C	+50°C	-60°C
1	2	3	4
300	2.6	2.6	2.4

[redacted]

50X1-HUM

1	2	3	4
400	2.7	2.7	2.5
500	2.7	2.7	2.5
600	2.8	2.8	2.6
700	2.8	2.8	2.6
800	2.8	2.8	2.6
900	2.9	2.9	2.7

The value of the electromotive force applied to the indicator terminals depends on the scale division under check and on the calibration of the thermocouple. This value is to be found in Table 8.

Table 8

Electromotive Force as Function of Indicator Division under Check and of Thermocouple Calibration

No.	Calibration index	Value of electromotive force in mV for temperatures of						
		300°C	400°C	500°C	600°C	700°C	800°C	900°C
1	2	3	4	5	6	7	8	9
1	O	-	-	7.16	13.48	20.0	26.64	33.76
2	P	0.96	4.16	10.24	17.88	25.08	33.04	41.08
3	T	-	5.46	11.31	17.76	24.26	30.92	37.52
4	M	-	3.36	8.92	15.32	21.84	28.52	35.2
5	Д	-	3.68	9.32	15.56	22.08	28.56	34.92
6	H	1.44	6.56	13.68	21.72	30.04	38.04	46.2
7	A	1.52	6.6	13.76	21.48	29.56	37.68	45.48
8	E	-	6.48	13.08	20.72	28.92	36.96	44.58
9	Б	-	6.04	13.4	21.08	29.16	37.28	45.44
10	B	1.4	6.36	13.36	21.08	29.16	37.28	45.48
11	Г	1.32	6.16	12.96	20.68	28.76	36.88	44.8
12	1	1.68	6.68	13.92	21.72	29.84	37.92	45.96
13	2	1.52	6.4	13.64	21.44	29.56	37.64	45.68
14	3	1.36	6.12	13.36	21.16	29.28	37.36	45.4
15	K	1.84	6.72	14.12	22.16	30.64	38.92	47.12
16	M	-	6.12	13.36	21.32	29.56	37.8	45.96

The value of the reading error is determined as the difference between the indicator reading and the actual temperature value at the given electromotive force. The indicator error must not exceed the values presented in Table 9.

Table 9

Permissible Reading Error of TBГ-11 Thermometer

Ambient temperature, °C	Indicator error, °C		
	450 - 640°C	650 - 750°C	Non-working range
+20 ± 5	±10	±7	±18
+50 ± 5	±13	±13	±26
-60 ± 5	±15	±15	±30

CAUTION: The TBГ-11 are manufactured with transmitters (thermocouples) of various calibration. Each calibration group has its own thermal electromotive force which differs from that of the other groups.

To distinguish one calibration group from another, each of them is given its own index indicated on the scale, thermocouple cap as well as in the Certificates.

The indicators and transmitters are mutually interchangeable in one and the same calibration group only, except groups Б and B and groups A and 2 which are mutually interchangeable.

In performing the check see to it that the indicator is kept for at least 2 hours at the temperature at which the check is to be performed.

Thermometer TCT-29

The resistance of the connecting wires is checked as follows:

1. Disconnect the plug connector from the indicator.

2. Connect, with the aid of additional wires, the terminals of the disconnected plug connector to terminals R_x of the electric bridge, type УМВ-49, used for measuring the resistance or some other bridge ensuring measurements accurate within 0.01 ohm.

3. Determine the resistance R_{total} of the wires connected to the terminals R_x of the bridge.

4. Determine the resistance R_{add} of the wires by means of which the terminals of the plug connector are connected to the terminals R_x of the bridge.

5. Determine the resistance of the thermocouple connecting wires from the formula:

$$R_{wire} = R_{total} - R_{add}$$

where R_{wire} - resistance of thermocouple connecting wires.

The resistance of the connecting wires at ambient temperature of +20 ± 5°C should be 9 ± 0.06 ohms.

The indicator error is checked as follows:

Cut the indicator into an electric circuit equivalent to the thermoelectric thermometer and employing a dry cell with a potentiometer as a source of electromotive force (See Fig.30). The voltage applied to the indicator terminals is measured with a millivoltmeter of an accuracy class not below 1.0. The resistance of the wires connecting the reference millivoltmeter with the indicator under check must be equal to 9 ± 0.6 ohms.

The value of the electromotive force applied to the indicator terminals

[redacted]

50X1-HUM

depends on the indicator scale division to be checked and on the ambient temperature at which the check is performed. This value is to be found in Table 10.

The error value is determined as the difference between the indicator reading and the actual temperature at the given electromotive force. The indicator reading error must not exceed ±12°C within a reading range of 600 to 800°C and ±27°C on the remaining portion of the indicator scale.

CAUTION: In performing the check see to it that the indicator is kept for at least 2 hours at the temperature at which the check is to be performed.

Thermoelectric Thermometer TUT-13

The resistance of the connecting wires is checked as follows:

1. Disconnect the plug connector from the indicator.

2. Connect, with the aid of additional wires, the terminals of the disconnected plug connector to the terminals R_x of the electric bridge, type YMB-49 , used for measuring the resistance or any other bridge ensuring a measurement accuracy up to 0.01 ohm.

3. Determine the resistance R_{total} of the wires connected to the terminals R_x of the bridge.

4. Determine the resistance R_{add} of the wires, by means of which the plug connector terminals have been connected to the terminals R_x of the bridge.

5. Determine the resistance of the thermocouple connecting wires from the formula:

$$R_{wire} = R_{total} - R_{add}$$

where R_{wire} - resistance of thermocouple connecting wires.

The resistance of these wires at an ambient temperature of +20 ± 5°C should be 7.15 ± 0.05 ohms.

The indicator error is checked as follows: cut the indicator into an electric circuit equivalent to the thermoelectric thermometer and employing a dry cell with a potentiometer (Fig.30) as a source of electromotive force. The voltage of the potentiometer must be fed to a reference millivoltmeter whose accuracy class is not below 1.0. The indicator to be checked is connected to the terminals of the reference millivoltmeter through wires whose resistance is 7.15 ± 0.05 ohms.

The value of the electromotive force which is determined by the millivoltmeter depends on the scale division to be checked, as well as on the ambient temperature. This value can be found in Table 11.

The error value is determined as the difference between the indicator reading and the actual temperature value at the given electromotive force. The indicator reading error must not exceed ±5°C within the range of 100 to 260°C and ±10°C on the remaining portion of the scale.

CAUTION: In performing the check see to it that the indicator is kept for at least two hours at the temperature at which the check is to be performed.

Table 10

Electromotive Force as Function of Indicator Scale Division under Check and of Ambient Temperature

Scale division to be checked	Electromotive force in mV at ambient temperatures of										
	15°C	16°C	17°C	18°C	19°C	20°C	21°C	22°C	23°C	24°C	25°C
200	7.53	7.49	7.45	7.41	7.37	7.33	7.29	7.25	7.21	7.17	7.13
300	11.61	11.57	11.53	11.49	11.45	11.41	11.37	11.33	11.29	11.25	11.21
400	15.79	15.75	15.71	15.67	15.63	15.59	15.55	15.51	15.47	15.43	15.39
500	20.04	20.00	19.96	19.92	19.88	19.84	19.80	19.76	19.72	19.68	19.64
600	24.30	24.26	24.22	24.18	24.14	24.10	24.06	24.02	23.98	23.94	23.90
700	28.54	28.50	28.46	28.42	28.38	28.34	28.30	28.26	28.22	28.18	28.14
800	32.71	32.67	32.63	32.59	32.55	32.51	32.47	32.43	32.39	32.35	32.31
900	36.76	36.72	36.68	36.64	36.60	36.56	36.52	36.48	36.44	36.40	36.36

Table 11

Electromotive Force as Function of Indicator Scale Division and Ambient Temperature

Indicator scale division to be checked	Electromotive force in mV at ambient temperatures of										
	15°C	16°C	17°C	18°C	19°C	20°C	21°C	22°C	23°C	24°C	25°C
50	2.37	2.30	2.24	2.17	2.11	2.04	1.97	1.91	1.84	1.78	1.71
100	5.97	5.90	5.84	5.77	5.71	5.64	5.57	5.51	5.44	5.38	5.31
110	6.71	6.64	6.58	6.51	6.45	6.38	6.31	6.25	6.18	6.12	6.05
150	9.71	9.64	9.58	9.51	9.45	9.38	9.31	9.25	9.18	9.12	9.05
190	12.86	12.79	12.73	12.66	12.60	12.53	12.46	12.40	12.33	12.27	12.20
200	13.67	13.60	13.54	13.47	13.41	13.34	13.27	13.21	13.14	13.08	13.01
250	17.78	17.71	17.65	17.58	17.52	17.45	17.38	17.32	17.25	17.19	17.12
300	21.92	21.85	21.79	21.72	21.66	21.59	21.52	21.46	21.39	21.33	21.26
350	26.17	26.10	26.04	25.97	25.91	25.84	25.77	25.71	25.64	25.58	25.51

[redacted]

Three-Pointer Electric Engine Gauge
Unit ЭМИ-3Р

The purpose of the check is to:

(1) find the error of the instrument at an ambient temperature of +20 ± 5°C;

(2) find the insulance of the electrical elements of the pick-up units (transmitters) and indicator;

(3) determine the airtightness of the pressure gauge pick-up unit casing;

(4) determine how tilts of the indicator affect its readings;

(5) determine the resistance of the heat-sensitive element of the pick-up unit at 0°C and at +100°C.

The following equipment is required for performing the check:

1. Wire bundles for interconnecting the units belonging to the ЭМИ-3Р set in accordance with the diagrams given in Figs 31, 32 and 33.
2. Reference pressure gauges up to 15 and up to 150 kg/sq.cm.
3. Resistance box, type ММС , or any other box ensuring selection of resistances accurate within 0.1 ohm.
4. Pressure feed cocks.
5. Wheatstone bridge of УМВ type or any other bridge, ensuring measurement of the resistances accurate within 0.2%.
6. Megger with a voltage of 500 V across the feelers.
7. Mercury pressure gauge rated for 1 kg/sq.cm.
8. Source of pressure up to 120 kg/sq.cm.
9. Source of direct current, 27 V.
10. Fittings (T-pieces, pipes, etc.).

Oil Pressure Gauge

The oil pressure gauge is checked as follows:

1. Assemble the ЭМИ-3Р set in accordance with the diagram given in Fig.34.
2. Making use of the cocks create a pressure in the oil pressure gauge system of 0, 2, 4, 6, 8 and 10 kg/sq.cm. consecutively (the pressure is to be checked by a reference pressure gauge).
3. Keep the system under a maximum pressure of 10 kg/sq.cm. for 15 min.
4. Reduce the pressure in the system consecutively in the reversed order.
5. The reading error is determined as the difference between the readings of the reference gauge and those of the gauge under check.

Before taking the reading tap slightly against the indicator casing and the casing of the respective pressure pick-up unit.

The influence of inclination of indicator 2 on the readings of the set is checked simultaneously with the check for reading errors. With the indicator inclined through 90° to the right or left, the error must not exceed ±0.4 kg/sq.cm. at divisions 0, 2, 4, 6 and 8 kg/sq.cm. and ±0.6 kg/sq.cm. at division 10 kg/sq.cm.

In order to check the casing of the pressure gauge pick-up unit for airtightness, assemble the set in accordance with the diagram in Fig.35.

Open the inlet cock and create a pressure of 850 mm of mercury in the pick-up unit casing and in the sensitive element simultaneously. Close the inlet cock and watch the mercury level during one minute. Drop of the mercury level for one minute must not exceed 8 mm.

The insulance of the current-carrying elements of the pick-up units and indicators with respect to their casings should be at least 20 megohms at an ambient temperature of +20 ± 5°C and relative humidity of 30 to 80%.

Fuel Pressure Gauge

The fuel pressure gauge is checked in the same way as the oil pressure gauge. The reading error of the fuel pressure gauge at divisions 10, 20, 40, 60, 80 and 90 kg/sq.cm. must not exceed ±5 kg/sq.cm.

Oil Thermometer

In order to perform the check, cut the temperature indicator into the circuit shown in Fig.34. Set resistance on the resistance box which would correspond to the indicator scale division to be checked. The resistance values are to be found in the respective table.

The error is determined as the difference between the reading of the temperature indicator and the temperature value for which the resistance has been selected in the resistance box. The error must not exceed ±4°C at divisions -40, 0, 50, 100 and 130°C, and ±6°C at divisions -50 and +150°C.

The resistance of the heat-sensitive element of the oil thermometer is determined with the aid of an УМВ Wheatstone bridge or any other instrument which will ensure a measurement accuracy within ±0.2% . Submerge first the temperature pick-up unit into a vessel with thawing ice, measure the resistance of its sensitive element, then submerge it into boiling water and measure the resistance again. The resistance is to be measured not earlier than in 5 min. after the pick-up unit was submerged into the respective medium. During the check the entire thin cylindrical portion of the pick-up unit must be submerged in the medium under check.

The resistance of the pick-up unit sensitive element must correspond to the resistance indicated in the Certificate of the given pick-up unit.

CAUTION: 1. Pressure must be supplied to the fuel pressure gauge pick-up unit through a plate damper only. Inobservance of this condition leads to premature failure of the pick-up unit.

2. Prior to installing on the aircraft a damper that was already in use, it must be checked as follows:

(a) connect it to the compressed air system and apply a pressure of 2 - 3 atm.;

(b) if the air passes through the damper, the latter may be installed on the aircraft.

Remote-Reading Electrical Pressure
Gauge ЭДМУ-3

The ЭДМУ-3 pressure gauge is checked in the same way as the oil pressure gauge of the ЭМИ-3Р set. The wire bundle diagram for checking the ЭДМУ-3 oil pressure gauge is given in Fig.31. The error of the ЭДМУ-3 set within the measurement range of 0.6 to 2.4 kg/sq.cm. must not exceed ±4% from the rated value of the scale.

[redacted]

50X1-HUM

TROUBLES AND REMEDIES

Trouble	Probable cause	Remedy
1	2	3
Tachometers T3-45 and T35-2		
With the engine running the instrument pointer will not start from zero	(a) Broken wires between generator and indicator	Find faulty place and remedy the wires
	(b) Wires from generator to indicator short-circuited	Find and remedy fault
Indicator readings too low	Faulty indicator	Replace indicator
Thermometer TBГ-11		
Indicator pointer stands against zero division when temperature in inner cone differs considerably from instrument reading	(a) Thermocouple or connecting wires open-circuited	Find and remedy fault
	(b) Connecting wires contact each other	Find and remedy fault
	(c) Thermocouple ends in junction box are connected in opposition	Rearrange the thermocouple ends in accordance with the diagram given in the description
	(d) Faulty indicator	Replace indicator
Indicator pointer deflects to left from zero	Polarity in junction box or indicator plug connector reversed	Connect wires in accordance with diagram given in description
Indicator pointer dances	Poor contact in connecting wires	Find and remedy fault
Indicator reading too low as compared with actual temperature in inner cone	(a) Wires of one or several thermocouples closed	Find and eliminate fault
	(b) Polarity of one thermocouple reversed	Connect wires in accordance with diagram
	(c) Indicator circuit faulty	Replace indicator
	(d) Poor contact in connecting wires	Find and eliminate fault
Indicator reading too high as compared with actual temperature in inner cone	Faulty indicator	Replace indicator
Thermometer TCT-29		
Gauge pointer stands against zero division when temperature in inner cone differs considerably from instrument readings	(a) Connecting wires open-circuited	Find and eliminate fault
	(b) Indicator plug connector open-circuited	Find and eliminate fault
	(c) Thermocouple open-circuited	Replace thermocouple
	(d) Faulty indicator	Replace indicator
	(e) Connecting wires short-circuited	Find and eliminate fault
Instrument readings too low	(a) Faulty indicator	Replace indicator
	(b) Poor contact in connecting wires	Find and eliminate fault
Instrument readings too high	Faulty indicator	Replace indicator
Instrument readings not stable	Defective contact in places of connecting wire joints	Find and eliminate fault
Thermometer THT-13		
With thermocouple cut in, instrument indicator will not operate	(a) Compensatory wires open-circuited	Find and eliminate fault
	(b) Faulty indicator	Replace indicator
	(c) Connecting wires contact each other	Find and eliminate fault
Instrument readings not stable	(a) Defective contact in places of connecting wire joints	Find and eliminate fault
	(b) Faulty indicator	Replace indicator
Instrument readings too low	(a) Poor contact in places of connecting wire joints	Find and eliminate fault
	(b) Faulty indicator	Replace indicator
Instrument readings too high	Faulty indicator	Replace indicator
Engine Gauge Unit ЭМИ-3Р		
Fuel Pressure Gauge		
When power supply is switched on, pointer remains in position OFF	(a) No power in mains	Check power supply line and remedy it if it is broken
	(b) Faulty contact in plug connector terminals B	Remedy plug connectors
	(c) Flexible wire in pressure pick-up unit broken	Replace pressure pick-up unit
	(d) Faulty brush contact in pressure pick-up unit	Replace pressure pick-up unit
At no pressure pointer shows 70	Reversed polarity	Reverse polarity

[redacted]

50X1-HUM

1	2	3
At no pressure pointer will not come to stand against zero division	(a) Pick-up unit potentiometer turns shorted (b) Membrane swollen	Replace pressure pick up unit Replace pressure pick up unit
At no pressure pointer will not stand against division 6 kg/sq.cm.	Wire running to plug connector terminal A broken	Find and remedy fault
When pressure is increased up to 100 kg/sq.cm. pointer stops against division 40 kg/sq.cm. and returns to 6 kg/sq.cm.	Faulty contact in plug connector terminals A	Find and remedy fault
At no pressure pointer stops against division 100 kg/sq.cm.	Wire running to plug connector terminal Б broken	Find and eliminate fault
When pressure is increased, pointer goes to division 60 kg/sq.cm. and returns then to 100 kg/sq.cm.	Faulty contact in plug connector terminals Б	Find and eliminate fault
At no pressure pointer stands below zero division	Wire running to plug connector terminal Г broken	Find and eliminate fault
When pressure is increased pointer moves between divisions 0 and 100 outside thb scale	Faulty contact in plug connector terminals Г	Find and remedy fault
At no pressure pointer stands at division 30 kg/sq.cm.	Wire running to plug connector terminal Д broken	Find and correct faul
When pressure is increased, pointer shifts to 70 kg/sq.cm. and then returns to 30 kg/sq.cm.	Faulty contact in plug connector terminals Д	Find and correct faul

Oil Pressure Gauge

1	2	3
When power supply is switched on pointer will not start from low division, but this happens when indicator is shaken	(a) No power in supply line (b) Brush contact in pressure pick-up unit broken	Check power supply li and remedy it if it is broken Replace pressure pick up unit
With power supply switched on pointer is pressed to lower rest and will not move away from it when indicator is shaken	(a) Reversed polarity (b) Wire running to plug connector terminal B broken (c) Faulty contact in plug connector terminals B	Reverse polarity Find and correct faul Find and correct fault
With power supply switched on, pointer is pressed to upper rest	Broken wire or faulty contact in plug connectors	Find and correct fault
In checking instrument for error corrections are beyond permissible limits	(a) Wrong adjustment of pressure pick-up unit (b) Amount of indicator adjustment resistances has changed.	Replace pressure pick-up unit Replace indicator

Oil Thermometer

1	2	3
When power supply is switched on pointer will not move away from lower rest	No power in supply line	Check power supply line and remedy it if it is broken
Pointer leaves lower rest when indicator is shaken	Faulty contact in indicator plug connector	Find and correct fault
With power supply switched on, pointer is pressed to lower rest	Broken wire or faulty contact in plug connector	Find and remedy fault
With power supply switched on, pointer is pressed to upper rest	(a) Sensitive element broken (b) Broken wire	Replace temperature pick-up unit Find and remedy fault

ELIMINATION OF COMPASS DEVIATION ON INSTRUMENTS ДГМК-7 , АРК-5 NOS 1 AND 2 AND НИ-12

Checking ДГМК-7 Compass for Synchronous Operation with НИ-50Б Air Position Indicator

In case faulty compasses are replaced by new one, as well as when wrong readings have been discovered in the flight or in case of compass misalignment, check the compass for operation on the ground and calibrate the compass.

Ground swinging is performed also when replacing:

(a) engines;
(b) ДГМК-7 compass transmitter;
(c) УШ navigator's indicators of ДГМК-7 compass;
(d) frames of АРК-5 compass Nos 1 and 2.

Compass calibration on the aircraft is performed in order to determine and correct semi-circular deviations and to determine or compensate the residual deviation.

The automatic course device of the НИ-50Б air position indicator is checked for synchronous operation with the navigator's main indicator УШ of the ДГМК-7

[redacted]

50X1-HUM

compass in order to determine the mismatching angle. If this angle exceeds 1°, use the deviation adjusting screws to synchronize the pointer readings.

General

1. Before bringing the aircraft to the deviation correcting ground, check the operation of the instruments, which are to be used during elimination of deviations.

2. Operations related to elimination of deviations are to be performed on special ground located at least 300 m. away from steel structures, underground power cables, metal tubes, buildings, H.T. lines, forests and other objects causing a change in the earth magnetic field.

3. The attending personnel who takes part in operations on correcting deviation should not use any tools made of ferromagnetic materials (steel screwdrivers, flat pliers, etc.).

4. Deviations are to be eliminated with the engines stopped.

5. КИ-12 and ДГМК-7 compasses are to be calibrated simultaneously (both compasses must be checked without fail).

Calibrate АРК-5 compasses Nos 1 and 2 separately.

6. Supply the electric mains of the aircraft from a ground source of power through a special plug connector. The mains voltage is 27.5 - 28 V D.C. and 115 ± 0.5 V A.C., 400 c.p.s. (through airborne inverter ПО-4500).

7. Before starting to correct deviation do the following:

(a) switch on the СПУ-10 interphone set;

(b) switch on the ЭУП-53 turn indicator;

(c) switch on two АГБ-2 gyro horizons (the АГБ-2 gyro horizon mounted on the right-hand board and one of the АГБ-2 gyro horizons installed on the left-hand board;

(d) switch on the ГПК-52 directional gyro;

(e) unlock the controls, place the pedals and control wheels in neutral position;

(f) set the РБП-4 indicator of the navigator in stowed position;

(g) switch on the АП-5-2М autopilot;

(h) set up the clock (working);

(i) place the armament and sight post in stowed position;

(j) set the ОПБ-11р sight.

8. In addition to the above-said follow the instructions given in the descriptions of the АРК-5 , КИ-12 , ДГМК-7 and НИ-50Б instruments.

Installation of Direction Finder on Aircraft and Position of Aircraft When Turning to Assume Required Headings

1. The aircraft is headed with the aid of a ДП direction finder.

Note: To head the aircraft it is advisable to use the method of "tail" direction finding at a distance of 150 - 200 m. In this case the direction finder must be placed at the above distance from the rear cabin of the aircraft on a tripod.

2. The sequence of heading an aircraft is given in the description of the deviation direction finder. This description is supplied with the instrument along with the Service Log.

3. When the aircraft is headed the L.H. wheel of the main landing gear

hould describe the circumference marked off on the deviation ground, the right ing being inside the circumference.

4. The aircraft is turned by a towing truck with the aid of a drawbar.

Note: In case the truck and drawbar influence the readings of the compasses they should be taken away from the aircraft each time the aircraft is turned to a new heading.

Elimination of Deviation of ДГМК-7 Remote-Reading Gyro-Magnetic Compass

Correction of compass deviation consists of:

(1) elimination of permanent and semi-circular deviation by means of the deviation instrument of the ПДК-3 transmitter (first stage);

(2) elimination of quarter deviation and remote-reading errors of the ПДК-3 transmitter with the aid of a mechanical compensator (profiling device) located in the navigator's indicator (second stage).

Elimination of Permanent and Semi-Circular Deviation

Permanent deviation is corrected as follows:

(a) switch on power supply to the compass;

(b) in two-three minutes after switching on power supply to the compass proceed to correction of permanent deviation for which purpose place the aircraft at magnetic courses of 0, 90, 180 and 270° in turn;

(c) at each of the magnetic courses determine the deviation as the difference in the readings of the magnetic course of the aircraft and the compass course scale of the navigator's indicator.

Each time before taking the readings, align the navigator's indicator and the transmitter by pressing the slaving button. Keep the slaving button pressed not less than 15 sec.

The algebraic deviation sum at all four courses divided by four will produce the setting error.

If permanent deviation exceeds 2°, it should be eliminated by turning the ПДК-3 transmitter, for which purpose ease off the screw and turn the transmitter casing in the ring with respect to the base through an angle equal to that of the permanent deviation. The casing turning angle is counted by the scale available on the ring.

Semi-circular deviation is corrected by permanent magnets of the deviation instrument at all four magnetic courses (0, 90, 180 and 270°). The semi-circular deviation at the given four magnetic courses is determined in the same way as when correcting permanent deviation. Here we usually encounter two cases:

First case. At courses 0 and 90° the initial deviation exceeds 10°. In this case place the aircraft at zero° and turn the extension piece (magnet) N - S to zero the deviation; at magnetic course 180° turn the same extension piece to halve the deviation value; at magnetic course 90° turn the extension piece E - W to zero the deviation; at magnetic course 270° turn the same extension piece to halve the deviation.

Second case. At courses 0 and 90° the initial deviation is less than 10°. In this case determine and record the deviation at magnetic courses 0 and 90°. At magnetic course 180° bring the deviation value to $\frac{(C_o + C_{180})}{2}$. At magnetic course 270° bring the deviation value to $\frac{(C_{90} + C_{270})}{2}$.

[redacted]

Elimination of Total Quarter Deviation and Remote-Reading Error

The total error is corrected as follows:

(a) place the aircraft at one of the 24 courses (0, 15, 30, 45°, etc.), at which the compass error is the least;

(b) align the indicator with the transmitter by pressing the slaving butto

(c) making use of the handle of the navigator's indicator, place the magnetic variation scale to zero, setting index S against zero;

(d) turn off the adjusting wrench and remove the pad to give access to the 24 adjusting screws;

(e) eliminate the compass error at the given course by turning that screw at which the pointer of the navigator's indicator indicates. The screw is turne with the aid of the adjusting wrench.

Example. The aircraft is placed exactly at 180°, the slaving button is pressed, the indicator pointer shows 181°. Turn the screw at which the pointer indicates to place the pointer exactly against division 180°, and the compass error at the given point will be eliminated.

The compass errors at the other points are eliminated after each turn of t aircraft through 15° in the same sequence as indicated above.

After elimination of deviation, the instrument pad must be put in place and the adjusting screw turned into its seat.

Simultaneously with residual error elimination and making charts of the navigator's indicator residual errors, make also charts of the repeaters residu errors.

Notes: 1. When eliminating deviation, with the engines stopped, take the indicator reading only after correcting the lag of the magnetic transmitter which is achieved by tapping the instrument on the casing.

2. The maximum error which can be eliminated with the help of any adjusting screw is 8°.

Elimination of Deviation of KH-12 Magnetic Compass

Prior to eliminating the deviation of the KH-12 magnetic compass, do not fail to switch off the fans and the glass electric heaters. Elimination of deviation of the KH-12 compass consists in determining and correcting the setting error, eliminating the semi-circular deviation and in determining and correcting the residual deviation.

Determination and Elimination of Setting Error

(a) Place the aircraft at the four main magnetic courses (0, 90, 180 and 270°) and calculate the setting error as the algebraic sum of the four deviation readings divided by 4.

(b) Correct the setting error of the navigator and pilots' compasses by tu ing the brackets through the value of the setting error. Turn the bracket to th left in case of a plus error and to the left in case of a minus error.

Elimination of Semi-Circular Deviation

(a) Place the aircraft at zero magnetic course. Use magnet N - S to make the compass read zero.

(b) Place the aircraft at magnetic course 180°. Use magnet N - S to halve the deviation

$$\frac{(C_o + C_{180})}{2}$$

(c) Place the aircraft at magnetic course 90°. Use the E - W magnet to set the compass exactly at 90°.

(d) Place the aircraft at magnetic course 270° and use the E - W magnet to halve the deviation:

$$\frac{(C_{90} + C_{270})}{2} .$$

Determination and Elimination of Residual Deviation

Residual deviation is determined and corrected at eight points: 0, 45, 90, 135, 180, 225, 270 and 315°.

Correct the deviation charts. Residual deviation must not exceed ±5°.

Elimination of Radio Deviation of APK-5 Radio Compasses Nos 1 and 2

General

1. The azimuth rings of the APK-5 compass No.1 have black-painted numerals, whereas those of APK-5 compass No.2 are painted red. On some aircraft the numerals on the rings of both compasses are painted black. .

2. The frames of APK-5 compasses Nos 1 and 2 should be compensated in accordance with Tables 12 and 13.

Note: The difference in the tables is a result of different installation of the frame of APK-5 compass No.2.

Table 12

Standard Correction Compensating Angles
at Eliminating Radio Deviation of APK-5
Compasses Nos 1 and 2

Radio station course angle, deg.	Averaged ΔP for compensation, deg.		Radio station course angle, deg.	Averaged ΔP for compensation, deg.	
	APK-5 No.1	APK-5 No.2		APK-5 No.1	APK-5 No.2
0	0	0	180	0	0
15	+12	+6	195	+11	+6
30	+18	+11	210	+16	+12
45	+19	+14	225	+16	+15
60	+16	+14	240	+13	+16
75	+10	+10	255	+7	+10
90	+3	+1	270	0	+1
105	-5	-6	285	-7	-6
120	-9	-10	300	-13	-10
135	-14	-12	315	-16	-11
150	-13	-9	330	-16	-9
165	-10	-6	345	-12	-5

[redacted]

50X1-HUM

Table 13

Standard Correction Compensating Angles at Eliminating Radio Deviation of APK-5 Compasses Nos 1 and 2

Radio station course angle, deg.	Averaged ΔP for compensation, deg.		Radio station course angle, deg.	Averaged ΔP for compensation, deg.	
	APK-5 No.1	APK-5 No.2		APK-5 No.1	APK-5 No.2
0	0	0	180	0	-1
15	+12	+12	195	+11	+11
30	+18	+16	210	+16	+16
45	+19	+16	225	+16	+16
60	+16	+12	240	+14	+12
75	+8	+7	255	+8	+6
90	+3	+0	270	0	0
105	-6	-9	285	-6	-8
120	-9	-13	300	-13	-14
135	-15	-18	315	-16	-17
150	-13	-18	330	-15	-18
165	-10	-13	345	-12	-12

3. In correcting radio deviation, see that the aircraft is placed from ty ПАР or МПАР radio station at a distance of at least three wave lengths. I the power of the radio station exceeds 10 kW, the aircraft should be placed at a distance of at least 100 km. from the station.

4. Radio deviation must be performed not earlier than 1 hr 30 min. after rise and not later than 1 hr 30 min. before sun set.

Elimination of Radio Deviation of APK-5 Compass No.1

1. Determine and correct the setting error as follows:

(a) place the aircraft by the compass at a course which is approximately equal to the magnetic bearing of the radio station which is used for deviation correction;

(b) using the deviation direction finder place the aircraft exactly at th magnetic course equal to the radio station magnetic bearing;

(c) tune the APK-5 compass in the radio station frequency, fine and reco the inverse radio bearing. If the latter is not equal to zero, the frame has a setting error;

(d) to eliminate the setting error, turn off the six bolts and turn the frame base through an angle equal to the setting error: in case of a plus error turn the frame base clockwise, in case of a minus error turn it counter-clockw

2. In order to determine and eliminate radio deviation, do as follows:

(a) position the aircraft at the magnetic course;

(b) adjust the radio compass receiver for the selected radio station, all it to warm up during 5 minutes and correct the deviation at 24 inverse radio bearings: 0, 15, 30, 45°, etc.;

(c) in case the deviation error exceeds ±3° remove the frame of the APK-5 compass No.1 and balance it. Then correct the deviation again at 24 inverse ra bearings;

(d) residual radio deviation must not exceed ±3°, including the frame setting error.

Note: At course angles 0 and 180° residual deviation must not exceed ±1°.

Elimination of Radio Deviation of APK-5 Compass No.2

1. Determine, in flight, the setting error with the radio station course angle being equal to zero.

2. Correct the frame setting error on the ground, for which purpose remove the frame from the bracket, turn out the 6 bolts and turn the frame base through an angle equal to the setting error: in case of a minus error, turn the frame base clockwise, and in case of a plus error turn it counter-clockwise, watching at the same time the readings of the pointer of the APK-5 compass No.2 on the navigator's selsyn indicator.

3. During the next flight (with the landing gear retracted) check compasses Nos 1 and 2 for correct readings at eight points by the ГПК-48 directional gyro or a landmark (at any altitude). The difference in the readings of the compasses tuned to one and the same radio station at radio station course angles equal to 0° and 180° must not exceed 2°, and at the remaining course angles this difference must not exceed ±3°, the radio deviation of APK-5 compass No.1 taken into account.

Notes: 1. The radio station course angle is to be taken by compass No.1 tuned to a distant radio station (300 - 400 km.) or to an airfield homing station of ПАР-3Б type (100 - 150 km.).
2. Take the readings off the navigator's selsyn indicator of compass No.2 with antenna No.1 cut in and vice versa.

4. When approaching for landing (with landing gear extended check compasses Nos 1 and 2 for differences at radio station course angles equal to 75, 120, 240 and 285°. See that the difference in the readings of the compasses tuned to one and the same radio station does not exceed 13° with the deviation error of compass No.2 being taken into account.

Note: The radio station course angle is to be taken by compass No.1 tuned to a distant or homing station, and the results are to be entered into the aircraft Log Book.

5. Check the entries in the aircraft Service Log relating to the readings of APK-5 compass No.2 at radio station course angles equal to 75, 120, 240 and 285° with the landing gear extended.

6. With the landing gear retracted, the residual radio deviat for APK-5 compass No.2 must not exceed ±3°; for course angles equal to 0° and 180° the residual deviation must not exceed ±1°.

Alignment of Automatic Course Device Indicator of НИ-50Б Air Position Indicator with Navigator's Course Indicator of ДГМК-7 Compass

After eliminating deviation of ДГМК-7 compass check the pointer of the ДГМК-7 compass navigator's indicator for synchronous movement with the automatic course device indicator of the НИ-50Б air position indicator. The courses on both indicators should be aligned, the pointers should move in the same direction. The alignment check is to be performed at courses from 0° to 360° every 15°.

[redacted]

50X1-HUM

Alignment is considered satisfactory, if the difference in the readings of the automatic course device and the compass indicator at courses divisibl by 15°, does not exceed 1°, otherwise align the courses with the aid of the adjusting screws of the НИ-50Б air position indicator automatic course devi (Fig.24). After adjustment is over, repeat the adjustment check at all point from 0° to 360° every 15°.

AUTOPILOT АП-5-2М

GENERAL

The АП-5-2М autopilot serves:

(1) for automatic stabilization of the aircraft with respect to the three axes in a straight flight;

(2) for performance of an automatic compensated turn and aircraft additional turns during lateral aiming;

(3) for ensuring stabilization of the sight in azimuth.

Complete Set and Arrangement of АП-5-2М Autopilot Units on Aircraft

The directional stabiliser is arranged on a special bracket on frame No.1 in the front pressurised cabin (Fig.36).

The vertical flight gyro is installed on a special bracket in the front pressurised cabin behind the seat of the left pilot (Fig.37).

The precession gyro unit and ПАГ-1Ф inverter are positioned at the left wll between frames Nos 19 and 20 (Fig.38).

The servo units of the ailerons are located on frame No.33, those of the rudder and elevator are positioned on a special wing on frame No.68. The elevator servo unit is located to the left and the rudder servo unit is positioned to the right.

The control panel is located on the upper electric board of the pilots (Fig.39).

The pilot director indicator (P.D.I.) is arranged on the instrument board of the left-seat pilot (See Fig.110).

The turn remote control handle is located on the right-hand side of the electric panel of the navigator-radar operator.

The amplifier, ПО-45 inverter, distributing box, relay box, resistance box for changing the pitching moment are positioned on the left-hand rack of the navigator-radar operator.

Emergency disengaging buttons are located on the spokes of ailerons control steering wheel of the left and the right pilots.

The formation stick and the control transfer are located on the swivelling bracket on the middle panel of the pilots (See Fig.40).

The directional stabilizer attachment bracket is ar anged on frame No.1.

The pitching moment limit switch, type ВК2-141в, is positioned on frame No.33 in the mechanism of the bomb bay limit switches.

Specifications of АП-5-2М Autopilot

1. The autopilot employs direct current, 27 ± 2.7 V.

[redacted]

2. Power consumed by the АП-5-2М autopilot from the aircraft mains at 27 V at rated load of the servo units (110 kg/cm. on the cable drum) does not exceed 500 W.

3. Power consumed by heating hoods from the aircraft mains does not exceed 250 W.

4. The operating temperature interval of the autopilot set is -45 to +50°C.

5. The autopilot operates normally within a temperature range from -20 to -45°C only when its heating system is switched on.

6. Departure of the directional stabilizer from the course at any point during 15 min. of operation of the "yawing base" does not exceed 3.5°.

7. Total departure of directional stabilizer from the course at the four mai points during 15 min. of operation at each point on the "yawing base" does not exceed 8°.

8. Resistance between the contact brush and the aileron pick-up potentiometer centre tap on the directional panel of the directional stabilizer does not exceed 5 ohms; the difference between the resistances of the rudder pick-up potentiometer winding arms does not exceed 5 ohms.

9. The contacts of the vertical flight gyro erecting mechanism cutout close when the F.D.I. potentiometer pointer deflects 1 - 1.5° to the left and right from the zero position.

10. The total deflection of the vertical flight gyro rotor axis in both directions from the vertical at normal temperature does not exceed 1.4°.

11. Maximum deflection of the rotor axis from the vertical of the vertical flight gyro is 1.2°.

12. The erecting time of the vertical flight gyro cardan unit from 45° tilts in each of the four quadrants is 2 - 10 min., the difference between the maximum and minimum erecting time from tilts at normal temperature must not exceed 4.5 mi

13. Power consumed by servo unit at normal temperature, 27 V and 110 kg/cm. load moment on cable drum does not exceed 80 W.

14. The braking effort developed by the servo unit on the cable drum at normal temperature is from 75 to 100 kg.

15. Servo unit potentiometer. Tension:

(a) potentiometer winding brushes (total) - 25 to 45 gr;
(b) slip ring brushes (total) - 20 to 40 gr;
(c) limit switch plates - at least 150 gr.

Resistance of working portion of potentiometer winding is 1100^{+200}_{-150} ohms.

16. Power supply of amplifier circuits:

(a) valve filament	D.C., 27 ± 2.7 V;
(b) transformers	A.C., 125 ± 15 c.p.s., 17.5 ± 2.5 V;

(c) voltage in secondary windings of bridge transformers at supply voltage of 17.5 V and frequency of 125 c.p.s. - 27 ± 2 V;

(d) throttling voltage:

maximum	80 - 20 V
minimum	25.5 ± 7.5 V

17. Power consumed by amplifier:

(a) valve filament	30 W maximum
(b) transformers	40 VA maximum

18. Control panel resistances:

(a) centring potentiometers	200 ± 20 ohms;
(b) sensitivity potentiometers	0.33 ± 0.066 megohms;
(c) ratio rheostat	600 ± 60 ohms;
(d) trimming potentiometers	250 ± 25 ohms;
(e) compensating potentiometer	2000 ± 200 ohms;
(f) control transfer potentiometer	2000 ± 200 ohms;
(g) turn control potentiometer	1000 ± 100 ohms.

19. Inverter ПО-45:

(a) output power	43.5 VA;
(b) A.C. voltage	18.3 ± 0.5 V;
(c) A.C. frequency	$125^{+5}_{-7.5}$ c.p.s.;
(d) duty of operation	long-time

20. Inverter ПАГ-1Ф

(a) load current	0.32 A;
(b) A.C. voltage	36 ± 4 V;
(c) A.C. frequency	400 c.p.s.;
(d) number of phases	3

21. The alternating current in the gyro motor phase of the precession gyro must not exceed 0.35 A.

22. Precession gyro sensitivity must meet the following requirement: at an angular velocity not exceeding 0.1°/sec. voltage should appear and be registered by the voltmeter.

23. The precession gyro operates within an angular velocity range of ±3°sec. +0.5°/sec.

24. Time required for formation stick to return to neutral position from any extreme position is from 0.3 to 1.5 sec. both for the "aileron" and "elevator".

25. The contacts of the formation central switch close before the signal comes from the aileron potentiometer.

26. The button serving to switch off the aircraft control from the autopilot has normally closed contacts. When the button is pressed the contacts open.

27. The brush surface contacting the commutator should constitute at least 85% of the brush section.

28. The time required for the navigator to additionally turn the aircraft, with the autopilot coupling engaged at 4 to 6°, must not exceed 18 sec.

29. With the autopilot in operation the control surfaces should deflect:

(a) ailerons	±4 ±0.5°;
(b) rudder	±5 ±0.5°;
(c) elevators	±5 ±0.5°;

30. The elevator neutral position corresponds to a deflection of the elevator by 2° downward.

31. Elevator deflection when the bomb bays are opened at a speed of 450 km/hr is equal to 20 ± 5 angular minutes.

32. The АП-5-2М autopilot set employs the following valves:

(a) 6 x 5	1 piece;
(b) 6Н8М	3 pieces;
(c) 6НМ	3 pieces.

33. The insensitivity zone of the АП-5-2М autopilot with the sensitivity handles shifted to minimum position is as follows:

(a) aileron	at least 1.5°;
(b) rudder	at least 0.50°;
(c) elevator	at least 1.0°.

[redacted]

50X1-HUM

34. The insensitivity zone of the АП-5-2М autopilot with the sensitivity handles shifted to maximum position is as follows:

(a) aileron .... not in excess of 0.4°;
(b) rudder .... not in excess of 0.25°;
(c) elevator .... not in excess of 0.4°.

35. The temperature inside the electric heating hoods is maintained by a thermal relay within the range of from 10 to 45°C.

36. The minimum length of the brushes at which they should be replaced is given in Table 14.

Table 14

Minimum Length at Which Brushes Should Be Replaced

Name of unit	Mark of brush and index	Length of brush, mm	
		minimum	rated
1	2	3	4
Directional stabilizer:			
gyro	MTC-7	22	28
erecting motor	MTC-7	11 - 12	18.5
Vertical flight gyro:			
gyro	MTC-7	18	24
servo unit	МГ-4А-А6	15 - 16	24
Inverter ПО-45:			
A.C. commutator	МГ-4А-А6	4.5 - 5	10.5
D.C. commutator	МГ-4А-А6	6 - 6.5	13.5
Inverter ПАГ-1Ф:			
D.C. commutator	MC-6	10	14

CHECKING AUTOPILOT FOR INSTALLATION ON AIRCRAFT AND OPERATION UNDER CURRENT

EXTERNAL INSPECTION

Directional Stabilizer

1. Check the bracket for proper attachment and see that the directional gyro is reliably secured to the bracket.

2. Engage and disengage the autopilot and sight couplings several times to make sure that the engagement mechanism functions correctly. When disengaged, the couplings should rotate freely on their drums without binding or dragging the drums along with them.

3. Examine the locking mechanism unit to make sure that the locking mechanism plunger is locked with its nut. Shift the solenoid plunger several times downward to make sure that the return spring returns the entire lever system and the plunger to the initial position. As the plunger goes downward, the lever of the autopilot coupling must be pressed. Remove dirt and foreign particles.

4. Make sure that the locking mechanism does not interfere with the movement of the autopilot coupling lever; see also whether there is a clearance between the "jaws" of the locking mechanism and autopilot coupling.

5. Take out the course panel cover and make sure that there is no dirt or dust inside the casing or on the potentiometers.

6. With the sight mounted, check to see that the wire bundles do not interfere with free movement of the sight with respect to the drift angles.

7. Make sure that the handles of the directional stabilizer bracket rotate without binding and allow the stabilizer to be set by a level.

8. Using a dynamometer check the tension of the autopilot, sight and drift gear couplings in accordance with Table 15.

Table 15

Spring Tension on Directional Stabilizer Couplings

Name of coupling	Spring tension by dynamometer, kg	
	minimum	maximum
Autopilot coupling	6	7
Sight coupling	8	9
Drift gear coupling	4	5

Control Panel

1. Check the handles for reliability of attachment on the shafts.

2. Check the rotation of all control panel handles within their turning limits. All handles should rotate smoothly and without binding except:

(a) turn control handle; when the pointer approaches the shaded portion of the scale and the zero position, a resistance to handle rotation should be left.

(b) turn compensator control drive handle; when the pointer approaches the position "Pilot", rotation of the handle becomes more difficult.

3. Check the plate of the switches for correct functioning and for proper attachment to the switches.

4. Make sure that all the pointers of the control panel handles are reliably secured and more only when the handles are turned.

Notes: 1. After the check handles "RATIO", "TURN COMPENSATOR", "INCREASE BANK", "TO DECREASE SKID" and "UP ELEV." must be placed in position determined in the air.

2. After the test is over set the drive control handle of the turn compensator into position "Pilot".

Pilot Director Indicator (P.D.I.)

1. Check the instrument for reliability of attachment.
2. Check the condition of the glass.
3. Check the pointer and instrument scale for presence of luminous compound.

Autopilot Switch-Off Button

1. Check the button for reliability of attachment in the splines of the aileron control wheels.

2. Press the buttons several times to make sure that they return to their initial position without binding.

[redacted]

50X1-HUM

Formation Stick

1. Make sure that the stick after being deflected and released returns t its central position.

2. Check to see that the buttons on the stick do not bind when being pre and return to the initial position.

Formation Stick Control Transfer

1. Check the stick for reliability of attachment on its shaft.

2. Set the control transfer in all positions and make sure that control transfer is performed without considerable efforts and that the stick is firm held in the selected position.

Vertical Flight Gyro

1. Check the attachment of the vertical flight gyro and see that there a no cracks on the shock absorbers.

2. Examine the plexiglass cover in the upper part of the vertical flight gyro and make sure that the cover is placed in a position at which the vertica flight gyro is uncaged. The plexiglass cover must not be cracked or have any deep scratches.

Amplifier

Check the amplifier for reliability of attachment, good condition of shoc absorbers and bonding.

Inverters

Check the inverters for reliability of attachment.

Distribution Box

1. Check the distribution box in accordance with the requirements prescri ed in Section "Aircraft Electric Mains" (See "Care of Split Boxes and Electric Boards").

2. Check the external condition and correctness of installation of series resistors on terminals Б-1 and Б-3 , as well as on terminals E-6 and E-8 which are equal to 400 ohms.

Relay Box

1. Check the relays for reliability of attachment in their seats.

2. Make sure that there are no metal chips, dust or any foreign objects inside the boxes.

3. Examine tightening of the nuts and attachment shoes of the wires.

4. Check to see that all the wires and their insulation are in good condition.

Precession Gyro Unit

Check to see whether the precession gyro unit is reliably secured and tha its surface has no dents or scores.

Servo Units

1. Check tightening of the bolts which secure the servo units.

2. Deflect the rudder and elevators into both sides and make sure that th cable is wound around the drum and that it permits shifting of the rudder and elevators into both directions.

3. Press the tension springs of the braking solenoids and make sure that, after pressure is removed, the rods and levers of the braking solenoids return to their initial position.

4. Make sure that there is no dirt or oil on the potentiometer contact brush and winding. Check the tension of the potentiometer contact brush.

5. Check the potentiometer brushes for reliability of attachment on braking drum.

6. Place the rudder and elevators in neutral position and make sure that the contact brushes of the follow-up system are centred, whereas the slide moving along the potentiometer is in its down position.

Turn Remote-Control Button

1. Check to see that the handle is reliably attached on the potentiometer shaft.

2. Make sure that the handle rotates freely, without binding, except in position "O" and in the shaded portion of the scale where a resistance is felt in turning the handle.

Resistance Box for Changing the Pitching Moment

1. Check the resistance box for reliability of attachment.

2. Check the wires for reliability of attachment to the resistance box.

Note: When inspecting the autopilot units, examine the condition of the plug connectors of the units. The plug connectors should be tightened as far as they will go, have no considerable play and be locked with safety wire.

Checking Operation of Energized Autopilot

CAUTION: Prior to checking the autopilot for operation, do not fail to unlock the aircraft controls and remove the service ladders, covers and other objects. Stop any operations on the aircraft controls.

1. Switch on the A3C-15 autopilot circuit breaker on the circuit breaker board of the left-seat pilot and the A3C-2 "Servo" circuit breaker on the circuit breaker panel of the navigator.

2. Actuate the plate on the panel to switch on the master switch and the "Stab." switch; then make sure that:

(a) the gyro motors of the directional stabilizer and vertical flight gyro, the precession gyro unit, inverters and servo unit motors are already operating; this is determined by the peculiar noise of the running motors;

(b) the erecting roller rotates properly.

3. After cutting in the master switch wait 5 to 8 minutes and then switch on the "Servo - P.D.I." switch on the control panel. This will cause the directional stabilizer erecting motor to operate.

4. Disengage the autopilot coupling and shift it to the left and right to check whether shifting of the P.D.I. potentiometer brush causes the P.D.I. pointer to deflect. When the potentiometer brush is moved to the left, the P.D.I. pointer should gradually deflect to the right and vice versa.

5. Place the P.D.I. potentiometer brush at zero. The P.D.I. pointer should also be at zero. Then engage the autopilot coupling.

6. Shift the aircraft control surfaces (rudder, ailerons, elevators) manually from one extreme position to the other. Repeat this movement several times. Make sure that the controls move freely.

7. In shifting the control surfaces manually check operation of the control panel pilot lamps. When the control surfaces are in the neutral position, the

50X1-HUM

lamps must not light, when they are in any other position, one of the lamps must burn without blinking. Blinking of the lamps when the control surfaces are not in the neutral position means that the servo unit potentiometers are dirty. In this case clean the potentiometer of the respective servo unit.

Note: On some aircraft the slide of the servo unit potentiometer may come off the potentiometer winding when the control surfaces are in the extreme positions. In this case both pilot lamps will not burn.

8. Turn the centring knobs on the control panel to the right or to the left; the position of the control surfaces at which both lamps go out will be changed.

9. Set the knobs "Centering" so that the pointers face upward.

10. Without centering, switch on the following switches on the control panel: "AILERON", "RUDDER", and "ELEVATOR". When some of the mentioned switches are cut in, the respective stabilization pilot lamp must light up and then go out in some time since the control surfaces will be set in the neutral position by the operating servo unit.

11. As the centering knob is slowly turned to the right or to the left as far as it will go, the respective stabilization channel control surface should deflect.

The control surfaces should deflect with interruptions, but evenly, each time the control surface displaces, the respective pilot lamp on the control panel should blink.

Turning the centering knob "AILERON" clockwise should cause the right-hand aileron to go up (the steering wheel rotates clockwise)and vice versa: turn the knob "AILERON" counter-clockwise will cause the left-hand aileron to go up (steering wheel rotates counter-clockwise).

Turning the centering knob "RUDDER" clockwise will cause the rudder to shift to the right-hand turn position (the right pedal goes forward). Turning of the same knob in the opposite direction should cause the rudder to shift to the left-hand turn position (the left pedal goes forward).

Turning the centering knob "ELEVATOR" clockwise should cause the elevato to move upward (the control column moves backward). When this knob is turned counter -clockwise, the elevator will go down (the control column moves forward) With the knob "ELEVATOR" in the extreme positions, the pilot lamp may not burn.

12. Set the centering knobs to "Pointer Up" position.

Note: As the centering knob is turned, not more than two simultaneous blinkings (pulses) of both pilot lamps are allowed on separate sections.

13. Disengage the autopilot coupling on the directional stabilizer and turn the coupling lever into the extreme left-hand position. The steering wheel shoul turn to the right, the right pedal should go forward and the P.D.I. pointer should deflect to the right.

14. Set the lever of the autopilot coupling in the extreme right-hand position. The steering wheel should turn to the left, the left pedal should move forward, whereas the P.D.I. pointer should displace to the left.

15. Return the autopilot coupling lever into the central position; after the contact brush of the P.D.I. potentiometer assumes its zero position, engag the autopilot coupling.

16. Set the control transfer to position "Pilot" and make sure that the pilot lamp does not burn.

17. Turn the turn control knob on the control panel to the right so that knob indicator should be at the beginning of the shaded portion of the le and make sure that the steering wheel has turned to the right and the right al has displaced forward. Turn the control knob to the same position, but to left and make sure that the steering wheel has turned to the left and the t pedal has displaced forward.

Set the knob in position "O", first to the right and then to the left, to e sure that the solenoid of the directional stabilizer locking mechanism is gaged and locks the autopilot coupling lever, whereas the top erecting roller the vertical flight gyro has ceased rotating.

18. Set the turn control knob in position "Centre", and then to the right- d left-hand positions "O". This done, place the knob in position "Centre" again he steering wheel and pedals should not move) and make sure that the solenoid the locking mechanism has disengaged and set the autopilot coupling lever se, whereas the top erecting roller of the vertical flight gyro begins to tate.

19. Set the turn control transfer on the control panel into position avigator" to make sure that the transfer position indicating lamp is on. Use e turn remote-control knob to carry out the checks described in Items 17 and 18.

20. Place the aircraft controls in neutral position as indicated by the lot lamps on the control panel.

21. Set the formation stick control switch in position "ON".

22. Shift the formation stick to the right as far as it will go and make sure at the steering wheel has turned clockwise and that the right pedal has displaced rward. With the formation stick in this position the locking mechanism lenoid of the directional stabilizer should be engaged and lock the autopilot upling lever.

23. Release the formation stick and make certain that it returns to the utral position. With the formation stick in the neutral position, the solenoid the directional stabilizer locking mechanism must automatically disengage d unlock the autopilot coupling lever in 3 to 9 sec. after the stick has turned to the neutral position.

24. Shift the stick to the extreme left-hand position and make sure that he steering wheel has turned counter-clockwise and that the left pedal has ved forward. Release the formation stick. Make sure that the stick, steering eel and pedals return to the neutral positions. With the formation stick in e neutral position, the solenoid of the directional stabilizer locking mecha- sm must automatically disengage and unlock the autopilot coupling lever in 3 9 sec. after the formation stick has returned to the neutral position.

25. Shift the formation stick backward as far as it will go and make certain at the control column has moved rearward. Release the formation stick and make re that the stick and column return to the neutral position.

26. Push the formation stick forward as far as it will go to make sure at the control column moves forward. Release the formation stick and see ether the formation stick and control column return to the neutral position.

27. Set the switch in position "Only Elevator ON". Deflect the formation ick forward and rearward to make sure that the control column follows the rmation stick. When the formation stick is moved to the right and to the left he pedals and steering wheel must not move.

28. Press the autopilot disengaging button of the left-seat pilot for - 2 sec. and displace the steering wheel, control column and pedals to make re that the autopilot servo units are disconnected and that the aircraft

[redacted]

50X1-HUM

controls move freely. Using the plate cut out the master switch on the contro panel and cut it in again. Cut in the switches "AILERON", "RUDDER" and "ELEVA Displace the booster control handle to make sure that the handle actuates the aircraft controls.

29. Press the autopilot disengaging button of the right-seat pilot for 1 - 2 sec., with the booster control switch in position "OFF", and shift the steering wheel, control column and pedals to make sure that the autopilot ser units are disengaged and that the aircraft controls move freely. Using the pl cut out the master switch on the control panel and cut it immediately in agai Cut in the switches "AILERON", "RUDDER" and "ELEVATOR" and check to see that controls are deflected by the turn control knob on the control panel. Make su that the controls are actuated by the knob.

- <u>Note</u>: If the autopilot disengaging button is released after it was pres the servo units should rot engage the aircraft controls before th master switch on the control panel is switched off and on again with the aid of the plate.

30. Check the sensitivity adjusting knobs on the control panel for prope operation of each stabilization channel Separately, for which purpose:

(a) cut in one of the switches "AILERON", "RUDDER" or "ELEVATOR" on the control panel;

(b) set the centering knob of the cut-in stabilization so that its poin should face upward (both pilot lamps will be out); turn the sensitivity adjus knob counter-clockwise;

(c) turn the sensitivity adjusting knob on the control panel clockwise. The steering wheel, control column and pedals will begin to oscillate, where the pilot lamps on the control panel will begin to blink in turn.

31. Check operation of the pitching moment counteracting mechanism for w purpose:

(a) adjust the neutral position of the steering wheel by the elevator;

(b) open the bomb bays. When this is done, the steering wheel should mo forward. When the bomb bays are closed, the steering wheel should again assu its neutral position. With the bomb bay open the elevator should be deflected 9 - 10 mm with relation to the inner face of the trailing edge, the blade bei not taken into account. The way of measuring the deflections of the aircraft control surfaces is described in Section "Controls" (See Book I).

32. Check operation of the autopilot heaters, for which purpose cut in th A3C-10 circuit breaker of the autopilot heater. The circuit-breaker is locat on the circuit-breaker panel of the left-seat pilot. Then switch on the heati system switch on the upper electric panel of the pilots and the A3C-10 circ breaker of the rudder and elevator servo unit heaters. This done, make sure th the lower covers of the servo units and vertical flight gyro warm up.

33. After the check is over cut out the switches on the autopilot contro panel making use of their common plate, cut out the A3C-10 circuit breakers the rudder and elevator servo unit heaters, as well as the heating switch on the upper electric panel of the pilots.

<u>Faults and Remedies</u>

Fault	Probable cause	Remedy
1	2	3
When controlled by autopilot aircraft deviates from given course	Directional stabilizer gyro unbalanced	Replace directional stabilizer or balance its gyro on a stand
Periodical jerks in control surface movement	Improper braking moment of servo unit braking solenoids	Adjust the braking moment of the servo unit braking solenoids by even distribution of the efforts to the left and right sides
When aircraft is controlled by formation stick, with switch placed in position "ON", the locking mechanism fails to operate or operates twice	(a) Unstable operation of time relay (b) Wrong adjustment of locking mechanism jaws on directional stabilizer	Replace time relay in relay box Adjust the locking mechanism of the directional stabilizer
When the centering knob is actuated, the control surface lags	No contact on servo unit potentiometer	Clean surface of potentio meter with a brush out of the AП-5-2М autopilot set. The brush should be soaked in clean gasoline
Locking mechanism solenoid does not keep time (3 to 9 sec.) after the formation stick has been turned	Wrong adjustment of time relay	Replace time relay in relay box
Unequal bank when control is exercised through directional stabilizer	Wrong centering of potentiometers on direction panel of directional stabilizer	Centre potentiometer slide on direction panel with the aid of an ohmmeter
Aircraft turns spontaneously	(a) Wrong tension adjustment of directional stabilizer coupling (b) Erecting mechanism of directional stabilizer and vertical flight gyro out of order	Adjust tension of directional stabilizer coupling Eliminate fault of erecting mechanism
Aircraft comes out of turn spontaneously	Locking mechanism on directional stabilizer is loose	Adjust tightening of the locking mechanism on the directional stabilizer. <u>Note</u>: When the autopilot coupling lever is tightly locked, there should

[redacted]

50X1-HUM

1	2	3
		be a clearance 2 - 3 mm betwe the bottom and armature of th locking mechani solenoid
When autopilot is engaged the aircraft tends to turn sharply	Gyro of directional stabilizer or vertical flight gyro is out of order	Remove directional stabilizer and vertic flight gyro and check their operation on a stand
Servo unit braking solenoids will not engage	Autopilot is disconnected from buttons on aileron control steering wheel	(a) Using the mast switch on the autopil control panel engage completely and diseng the autopilot (b) Check operatio of the engaging butto serving to engage the autopilot for aircraft control

OXYGEN EQUIPMENT

GENERAL SPECIFICATIONS

The oxygen equipment ensures normal oxygen supply for the aircrew during high-altitude flights and bailing out by ejecting the seat.

The oxygen system (Fig.41) includes the following elements:

1. Two liquid oxygen converters, type КПЖ-30 , designed for storage and gasification of liquid oxygen and delivering gaseous oxygen to the line which supplies the aircrew (the arrangement diagram of the КПЖ-30 liquid oxygen converter is given in Fig.42).

2. Six oxygen stations. Each of them includes:
   (a) stationary oxygen regulator, type КП-24М;
   (b) pressure gauge, type МК-13М
   (c) oxygen-flow indicator;
   (d) excessive pressure gauge, type М-1000;
   (e) oxygen valve, type КВ-5;
   (f) oxygen hose, type КШ-24;
   (g) oxygen mask, type КМ-30М, with the mask-to-face tightness compensator and a lock;
   (h) yellow warning lamp (only in four stations).

3. The aircraft charging system consisting of aircraft charging connection and pipe lines of the АМгМ-Т12х14 material connecting the charging connection to the КПЖ-30 liquid oxygen converter.

4. Six tee-pieces with non-return valves. The tee-pieces ensure oxygen supply to each working station from both КПЖ-30 converters simultaneously and prevent oxygen from being released from both converters simultaneously in case one of the sections of the oxygen system is damaged.

5. Six parachute oxygen apparatus, type КП-23 , with hoses.

All these elements are connected to one another by means of pipe lines of the АМгМ-Т6х8 material and aircraft fittings.

The vessel of each converter, type КПЖ-30 , has a capacity of 28 litres. The amount of liquid oxygen filled into both converters is 64 kg. The amount of consumed oxygen is 60 kg.

The minimum operating pressure is 8 atm. gauge, the maximum operating pressure is 10 atm. gauge.

The maximum oxygen consumption from one converter is 6 kg per hour.

The pressure required for the operation of the safety valve is from 11.0 to 11.8 atm. gauge.

The evaporativity of each converter must not exceed 250 gr per hour.

ACCESSIBILITY FOR INSPECTION

Oxygen panels with instruments both in the front and rear pressurized cabins are easily accessible for inspection.

[redacted]

To inspect the pipe lines in certain places it is necessary to remove th neighbouring units. Such places are:

(1) Pipe line in the area of frames Nos 4 - 9 on the starboard and port sides.

To obtain access to the pipes, remove from this section: from the starbo side – the shut-off valves control panel, from the port side – the interphone set panel of intercommunication system СПУ-10 , and the IFF transponder pa

To obtain access to the pipes on frame No.4, remove the fuse panel and flap back the navigator's instrument board.

(2) Pipe line in the area of frames Nos 9 - 12 on the starboard and port sides. To obtain access to the pipes of this section remove the following fro the starboard side:

(a) converter, type РСБ-70 , on the operator's panel support;

(b) thyratron interrupter on the operator's panel support (starboard).

from the port side:

(a) block, type P-6;

(b) P-6 block panel.

(3) Pipe line on the bottom of frame No.12.

To obtain access to the pipes, it is necessary to detach the operator's electric panel (central panel).

(4) Pipe line in the Ф-3 cabin on the starboard and port sides.

To obtain access to the pipes, do as follows:

(a) open the container hatches of fuel tanks Nos 1 and 2;

(b) remove tank No.1;

(c) remove tank No.2;

(d) remove hatches in the containers of tanks Nos 1 and 2.

(5) Pipe line in the Ф-4 cabin from frame No.26 up to frame No.34 on the starboard and post sides.

To obtain access to the pipes, proceed as follows:

(a) open the hatch in the Ф-4 cabin between frames Nos 27 - 29;

(b) remove the starting fuel tank between frames Nos 27 - 29;

(c) remove the cooler between frames Nos 30 - 31.

Besides this, to obtain access to the pipes of the starboard side, do as follows:

(a) remove the drain pipe;

(b) remove the pipe of the high-altitude equipment;

(c) loosen the yoke on the drain pipe and turn the branch pipe.

To obtain access to the port side pipes, remove the drain pipe.

To obtain access to the pipes in the area from frame No.34 up to frame No.49, it is unnecessary to remove the neighbouring units.

(6) Pipe line in the Ф-6 cabin.

To obtain access to the pipes, it is necessary to remove th. РСИУ-3М radio set from the bottom of frame No.69.

(7) Aircraft charging pipe line in the area of frames Nos 19 - 22.

To obtain access to the charging pipe union and charging pipe line:

(a) open the aircraft oxygen charging hatch;

(b) open the hatch in the nose wheel well on the starboard side between frames Nos 19 - 22.

(8) The pipes laid in the area of frames Nos 49 - 57 are not accessible.

(9) To obtain access to the liquid oxygen converter, type КПЖ-30 , at frame No.13 and the pipe line at the converter use the hatch on the bottom of frame No.12.

PREPARATION FOR FLIGHT INSPECTION

The pre-flight inspection consists in thorough examination of all accessible units and pipe lines of the oxygen system. For this, do as follows:

1. Open the entrance hatches in the pressurized cabins (if they are closed).
2. Open the doors of the bomb bay hatches and of the hatch between frames Nos 27 - 29.
3. Remove cases from the oxygen regulator, type КП-24 .
4. Examine the oxygen panels with instruments and make sure that they are not damaged.
5. Check to see that the instruments are securely fastened to the panels.
6. Examine the pipe line in all accessible places; make sure that the pipe lines are securely connected to the oxygen flow indicators, МК-13М pressure gauges, М-1000 excessive pressure gauges, КП-24М economizer, КБ-5 oxygen valves, BOTTOM (НИЗ) and TOP (ВЕРХ) transmitter pipe unions, pipe unions of the КБ-5 valves on the КПЖ-30 converters and check the pipe lines for secure attachment.
7. Examine the КПЖ-30 converters (Fig.43); check whether the safety valve case is securely attached and whether the КБ-5 valves and the pressure release valves of the КПЖ-30 converters open easily.
8. Examine the places of connection of the КШ-24 hoses to the КП-24М economizer.
9. Check whether the oxygen adapter in the operator's seat turns easily (Fig.44).
10. Check the presence of liquid oxygen in the КПЖ-30 converters. Add liquid oxygen if necessary.
11. Put the КПЖ-30 converters to the operating condition and check them for serviceability.
12. Check the operation of the КП-24М set.

Charging КПЖ-30 Converters with Liquid Oxygen

To save liquid oxygen, prior to each flight the КПЖ-30 converters should be charged with the amount of oxygen necessary for the flight only.

The amount of oxygen required for the flight is to be determined by the formula:

$$G_{п} = G_{н} + tq ,$$

where G_n is the required amount of liquid oxygen in kg;
G_H is the stock of oxygen not taken into account in kg (6 kg per each converter, type КПЖ-30);
q is the rated oxygen consumption for all the aircrew in kg per hour (5 kg per hour for all the aircrew);
t is the time of flight in hours.

Calculate the amount of oxygen necessary for the flight and then measure the amount of oxygen on the aircraft turning on the switch, type 2ПП-250, with the ПО-4500 inverter operating. Add the readings of both indicators and compare the amount obtained with the amount of oxygen required for the flight.

[redacted]

50X1-HUM

If the measured amount is less than the rated value, charge the converters with additional amount of oxygen.

CAUTION: Flight with oxygen supply below the rated value is prohibited.

The converters should be charged with liquid oxygen in the following manner:

1. Open the pressure release valves (if they are closed) on the КПЖ-30 converters and equalize the pressure in the converter vessels with the atmospheric pressure (Fig.45a).

Note: To uniformly charge the КПЖ-30 converters with liquid oxygen, open the pressure release valve on the converter at frame No.13 by 0.5 of a turn only and that on the converter at frame No.22 completely.

2. Close the valves, type КВ-5, before the automatic pressure increase units and after the evaporators.

3. Open the cover of the aircraft charging pipe union hatch and unscrew the plug on the pipe union (Fig.46).

4. Wipe the charging pipe union with a piece of gauze soacked with alcohol.

5. To the charging pipe union connect the pipe line from the "Tank" and the vacuum flask (СД-15).

Note: When unscrewing the plug and connecting the pipe line, see that no moisture and dust get into the filler pipe.

6. Switch on the АЗС-2 circuit breaker on the operator's electric panel in the inverter circuit, set the inverter switch on the generator panel to the OPERATING (РАБОЧИЙ) position and turn on the oxygen level indicator switch, type 2ПП-250 , on the pilot oxygen panel.

7. Pressure in the "Tank" reaching 3 or 4 atm. gauge, open the valve on the "Tank" and fill the vessels of the КПЖ-30 converters with liquid oxygen.

8. Fill the converters until liquid appears in the drain holes which indicates that the vessels are charged completely (32 kg in each vessel). Besides this, check filling the vessels with liquid by the pilots' oxygen level indicators. With the vessels charged completely, the indicator pointers must be within the limits of 28 to 32 kg.

9. If the converters are not charged with oxygen to their full capacity, check the amount of oxygen filled by the oxygen level indicators only.

Note: When charging the converters with liquid oxygen, see that excessive pressure is equal to 3 or 4 atm. gauge as decreased excessive pressure may cause the non-return valve to get frozen in the КПЖ-30 converter filler neck. In this case stop charging and knock on the valve cover with a wooden stick.

10. If the converter is filled with liquid oxygen from vacuum flasks, prior to connecting the pipe from the vacuum flask to the aircraft charging pipe union do as follows:

(a) bring the cylinder with gaseous oxygen to the aircraft, connect the oxygen reducer to the cylinder and check the presence of oxygen in the cylinder;

(b) open the valve on the cylinder and scavenge the reducer with the hose with gaseous oxygen;

(c) remove the plug from the vacuum flask, fit a rubber packing gasket over the vessel neck, insert the filler pipe and fasten the extension dampers to the handles of the vacuum flask;

(d) connect the low-pressure hose to the filler pipe;

(e) connect the adapter pipe to the vacuum flask;

(f) after the adapter pipe of the vacuum flask has been connected to the
raft charging pipe union, slowly open the valve on the cylinder with gaseous
gen, create excessive pressure of not less than 4 atm. gauge and fill the
verters.

Note: To charge the КПЖ-30 converter to full capacity, it is necessary to have six full vacuum flasks.

11. Make sure that the vessels are charged completely, close the valve on
"Tank" or on the cylinder with gaseous oxygen, if charging is done from the
um flasks.

12. In two or three minutes after the liquid has been filled disconnect
n the aircraft charging pipe union the pipe line connecting the vacuum flask
the "Tank" and plug the disconnected pipe line.

13. Screw a plug on the aircraft charging pipe union and close the hatch.

14. Switch off the 2ПП-250 oxygen level indicator switch, the inverter
tch and the АЗС-2 circuit breaker.

15. The charging completed, disconnect the filler pipe from the adapter pipe.
move the filler pipe from the vacuum flask, plug its upper end and fit a rubber
p on the lower end.

Disconnect the low-pressure hose from the filler pipe and plug its free end;
ose the vacuum flask with a plug.

Checking Operation of Distant-Reading Liquid Oxygen Level Indicator, Type ДУКЖ

Check the operation of the oxygen level indicator, type ДУКЖ , when
arging the КПЖ-30 converter with liquid oxygen.

With the vessels filled completely, the indicator pointers must be within
3 to 32 kg. With the pressure increased, the indicator pointers may fluctuate
t the indicator readings after pressure rise must differ from those under no
ressure by not more than ±1 kg. If after pressure rise the indicator pointers
ove towards increase in readings, this is indicative of leaks in the "Oxygen
evel Indicator Top" connections; if they move towards decrease in readings, this
s indicative of leaks in the "Oxygen Level Indicator Bottom" connections. If on
ressure increase the pointers do not move at all, this shows that the ДУКЖ
xygen level indicator circuit is de-energized. This being the case, ring out
he circuit and eliminate the damage.

Putting КПЖ-30 Converters to Operating Condition

Put the charged КПЖ-30 convertors (See Fig.45) to the operating condi-
ion as follows:

1. Close the pressure release valves (if the converters are put to the
operating condition immediately after charging and the pressure release valves
are open).

2. Open the КВ-5 valves ahead of the automatic pressure increase units.

3. Open the КВ-5 valves after the evaporators.

4. Pressure in the converters must first increase rapidly and then stop at 8.3 or 8.5 atm. gauge. If the converter contains not less than 26 or 27 kg. the time of pressure increase to 8.3 or 8.5 atm. gauge must not exceed 10 minutes (usually this time is equal to 3 to 5 minutes).

The pipes before the automatic unit get frozen and then in 10 or 15 minutes when pressure increase stops, begin to warm up.

Increase pressure not less than 30 minutes before flight.

[redacted]

50X1-HUM

Checking Serviceability of КПЖ-30 Converters Before Flight (See Fig.45)

1. When opening the KB-5 valves ahead of the pressure increase automatic units, pressure in the converters must rise up to 8.3 or 8.5 atm. gauge during or 10 minutes, after this pressure increase must stop (the pipes ahead of the automatic units get warmed). If the pipes ahead of the automatic pressure incr valves fail to get warmed during 10 or 15 minutes, this testifies to a loose valve-to-seat fit. This being the case, reduce pressure and then increase it a If this does not cause the valve to close, it is necessary to close the valve ahead of the defective automatic unit and then open it by 1/8th of a turn afte it has warmed up.

Note: When no gaseous oxygen is consumed, pressure in the system increase due to evaporation of oxygen in the converter vessel and in some ti reaches 11.5 or 11.8 atm. gauge, that is the safety valve relief pr sure. If the automatic units are in good repair, this must take up less than 45 minutes.

2. Check the gastightness of all the converters connections accessible fo inspection. Pay attention to the gastightness of the charging pipe union.

3. Open the oxygen valves, type KB-5, (See schematic diagram б , Fig.45) ahead of the economizers, type КП-24М , at all stations.

4. Check oxygen delivery to oxygen stations by the pressure gauges, type MK-13M, which must indicate operating pressure in the supply line from 8.3 to 10 atm. gauge.

5. Check oxygen delivery to the supply line from each vessel of the КПЖ-3 converter separately. For this close in turn the KB-5 valves after the evaporat of the КПЖ-30 converters. Check oxygen delivery by the pressure gauges, type MK-13M, installed at oxygen stations. Prior to checking oxygen delivery from e vessel release pressure in the supply line through the emergency cocks of the КП-24М economizers.

Checking Operation of КП-24М Economizer

1. Check the gastightness of the high-pressure system of each oxygen stat For this open the KB-5 valve on the oxygen station and then close it. If the pressure gauge pointer does not show pressure drop during not less than 2 minu the system is gastight.

2. Check the gastightness of the low-pressure system of the КП-24М econo mizer (from the economizer valve up to the plug on the КШ-24 hose). For this purpose do as follows:

(a) release the remaining oxygen from the system by means of the manual regulator on the КП-24М apparatus;

(b) set the handle of the air dilution switch to the CLOSED (ЗАКРЫТО) po tion;

(c) remove the plug on the КШ-24 hose and make an inhalation. If it is impossible to make an inhalation, the system is gastight;

(d) after checking the gastightness, set the handle of the air dilution switch to the OPEN (ОТКРЫТО) position.

3. Check oxygen delivery of the mask by the КП-24М economizer without excessive pressure and with excessive pressure setting the economizer cock to MIXED (СМЕСЬ) and PURE (ЧИСТЫЙ) positions successively.

Checking Operation of КП-24М Economizer without Excessive Pressure

1. Put on the mask, type КМ-30М, and connect it to the hose, type КШ-24.
2. Open the KB-5 valve of the oxygen station.
3. Close the manual regulator on the КП-24М apparatus as far as it will go.
4. Make several inhalations and exhalations setting the manual switch of the air dilution automatic device first to the OPEN (ОТКРЫТО) and then to the CLOSED (ЗАКРЫТО) positions. If this causes the flow indicator flaps to get together, the КП-24М apparatus functions properly.

Checking Operation of КП-24М Economizer with Excessive Pressure

1. By means of the manual regulator build up excessive pressure equal to 250 mm W.G. on the КП-24М economizer (watch the pressure by the M-1000 excessive pressure gauge).

2. Put on and remove the plug from the КШ-24 hose several times. If this causes the flow indicator blinkers to get together and depart, the КП-24М economizer operates normally.

Note: When the apparatus operation is checked under excessive pressure on the ground, the flow indicator flaps might fail to operate.
In this case watch the pointer of the excessive pressure gauge. If during the opening and closing of the КШ-24 hose plug the pointer of the M-1000 pressure gauge oscillates, the apparatus functions properly.

3. Check emergency oxygen delivery by setting the emergency cock of the КП-24М economizer to the OPEN (ОТКРЫТО) position.

Note: When checking emergency delivery oxygen, pressure in the system must not drop below 8.3 atm.

Check emergency oxygen delivery by listening, holding the end of the КШ-24 hose close to the face and opening the plug in the hose.

After the entire oxygen system has been checked and if there is a sufficient supply of liquid oxygen available, the technician reports to the commander on the readiness of the aircraft for flight.

If the flight is cancelled for some reason, do as follows:

(a) close the KB-5 valves ahead of the pressure increase automatic units and after the evaporator on the КПЖ-30 converters;

(b) release pressure from the pipe lines through the emergency cocks of the КП-24М economizers. This done, close the valves, type KB-5, on the aircrew oxygen panels.

CAUTION. To avoid fire and accidents, it is necessary to observe the following rules:

1. When releasing oxygen from pipe lines all the entrance hatches and ports must be open.
2. The clothes of the personnel handling oxygen equipment must be free from oil and grease.
3. When releasing oxygen, it is prohibited to perform any other work in the aircraft.
4. It is strictly prohibited to smoke.

[redacted]

50X1-HUM

POSSIBLE FAULTS OF OXYGEN SYSTEM AND MEANS OF THEIR ELIMINATION

The oxygen system may have the following defects:

(a) leakage, clogging of the system;

(b) faults of the instruments included in the system. Leakage in the system should be eliminated by additional tightening of the union nuts in plac of oxygen leakage while clogging of the system should be eliminated by scavenging.

Checking System for Leakage

To check the system for leakage, do as follows:

1. Open the hatch of the aircraft charging pipe union.

2. Unscrew the plug from the end of the aircraft charging pipe union and screw the union nut of the charging hose on the charging pipe union.

3. Connect the pipe line from the stand (a cylinder with nitrogen) to the other end of the hose.

4. Charge the vessels of the КПК-30 converters and the pipe line with nitrogen whose purity and humidity correspond to those of medical oxygen increasing pressure to 10 atm. gauge. Charge the system slowly from forty-litre high-pressure (150 kg/sq.cm.) cylinders. During charging the pressure release valves of the КПК-30 converters must be closed, while the valves after the evaporators must be open.

Note: With the pressure increased, take particular care to see that the pipe lines joining the ДУКК oxygen level indicator and the КПК-3 converter are tightly connected.

5. The charging over, disconnect the pressure source and note the indications of one of the pressure gauges.

6. In no less than 12 hours measure pressure in the system again by means of the same pressure garge.

The gastightness of the system is considered to be satisfactory if with the KB-5 valves open, the pressure in the system decreases not more than by 6.5 kg/sq.cm. during 12 hours or with the KB-5 valves closed, not more than by 5.2 kg/sq.cm.

Note: 1. When checking gastightness, take into consideration the effect o temperature.

2. To avoid errors due to possible hysteresis of the mechanism, slightly knock on the instrument case with the finger prior to taking readings.

7. If the system is found leaky, detect the leaky place first of all. For this smear all the places of connection of the pipe line to be replaced with soap-suds. In the event of considerable leakage the leaky place can be detect by the hissing of emerging gas. Examine all the connections and mark the detected leaky places to eliminate the leakage.

8. Slight leakage can be eliminated by careful tightening of the threaded connections without releasing nitrogen from the system. Bear in mind that overtightening the threaded connections of pipes made of aluminium alloy often ca jamming and stripping of thread.

9. In the event of considerable leakage of nitrogen completely release pressure from the system. This done, start eliminating the leakage. To elimin jamming of threaded connections and to ensure their gastightness, use special oxygen-proof lubricant.

10. After gastightness has been checked up, scavenge the system. For this rpose through the aircraft charging pipe union apply a pressure of 10 atm. uge to the system from the ground cylinder with pure oxygen. Open the onomizer emergency valve at each oxygen station in turn and scavenge each ation during 30 or 60 seconds. A strong jet of gas will clean the system from trogen.

When applying pressure, the pressure release valve of the КПК-30 converter st be closed while the valve after the evaporator must be open.

11. When scavenging the entire system with medical oxygen, check the peration of the КПК-30 converter safety valves. For this:

(a) close the KB-5 valves after the evaporators on the КПК-30 converters;

(b) smoothly build up a pressure of 11.0 to 11.8 atm. gauge in the КПК-30 onverters from the cylinder with medical oxygen. Under this pressure the afety valves must open (operate);

(c) reduce pressure in the КПК-30 converter vessels to one atm. gauge; pening the pressure release valve on one of the КПК-30 converters make sure y listening that the vessels are gastight; at this pay attention to the gasightness of the ДУКК oxygen level indicator pipe lines.

12. Release pressure from the КПК-30 vessels and disconnect the hose from he aircraft charging pipe union.

13. Screw the plug on the pipe union and close the hatch.

CAUTION. 1. When scavenging the system with oxygen, use of fire (smoking, lighting up matches, etc.) and presence of oil on pipe unions, valves and oxygen system units are absolutely prohibited.

2. To avoid accidents, open the oxygen valves slowly.

3. After the test and the elimination of faults in the system, thoroughly wipe each connection with a piece of clean gauze moistened with rectified alcohol.

4. Scavenging the system with pure oxygen should be done out-of-doors.

Effect of Temperature Change during Check of System Gastightness

When determining the system gastightness, take into consideration pressure change in the system caused by a change of gas temperature in connection with ambient air temperature change.

Gas pressure is directly proportional to the absolute temperature at constant volume, that is on condition of complete gastightness of the system, pressure increases at temperature rise and decreases at temperature drop. This relation is expressed by the formula:

$$\frac{p_1}{p_2} = \frac{T_1}{T_2} ,$$

therefore

$$p_2 = \frac{p_1 T_2}{T_1} ,$$

where T_1 and T_2 - absolute temperature equal to:

$$T_1 = 273 + t_1{}^{\circ}C; \quad T_2 = 273 + t_2{}^{\circ}C;$$

p_1 and p_2 - gas pressure at temperatures T_1 and T_2.

[redacted]

To take into account the influence of temperature upon pressure in the system, using the above given formula determine pressure to the moment of secondary pressure (in 12 hours after the measuring of initial pressure) and compare it with the original indications of the pressure gauge. If the differenc of these pressures with the valves closed exceeds the amount of leakage permitt for this time (5.2 kg/sq.cm. per 12 hours), the gastightness is insufficient.

Example of Calculation

Example 1. Initial pressure in the system: $p_1 = 10$ kg/sq.cm.

Pressure by the reference pressure gauge: $p_k = 6$ kg per sq.cm.

Initial temperature: $t_1 = 20^{\circ}C$.

Temperature in 12 hours: $t_2 = 10^{\circ}C$.

The system is to be tested with the valves closed.

Pressure in the system with no leakage:

$$p_2 = \frac{p_1 T_2}{T_1} = \frac{10(273+10)}{(273+20)} = 9.65 \text{ kg/sq.cm.}$$

Pressure difference:

$$\Delta p = 9.65 - 6 = 3.65 \text{ kg/sq.cm.}$$

The difference thus determined is less than the permissible value of leakage (5.2 kg/sq.cm. per 12 hours). The system gastightness is satisfactory.

Example 2. Initial pressure: $p_1 = 10$ kg/sq.cm.

Initial temperature: $t_1 = 10^{\circ}C$.

Temperature in 12 hours: $t_2 = 5^{\circ}C$.

Pressure as indicated by the reference pressure gauge:

$$p_k = 3.5 \text{ kg/sq.cm.}$$

The system should be tested for leakage with the valves open.

Pressure in the system with no leakage:

$$p_2 = p_1 \frac{T_2}{T} = \frac{(273+5)}{(273-10)} = 10\,\frac{278}{263} = 10.57 \text{ kg/sq.cm.}$$

Pressure difference:

$$\Delta p = p_2 - p_k = 10.57 - 3.5 = 7.07 \text{ kg/sq.cm.}$$

The pressure difference obtained $\Delta p = 7.07$ kg/sq.cm. exceeds the permissible leakage (6.5 kg/sq.cm. per 12 hours), therefore, the system is insufficie ly gastight.

Checking Shut-Off Valves

After the leakage test, prior to scavenging the system, check the operatio of the shut-off valves.

Check the shut-off valves with nitrogen for shutting off the КПЖ-30 converters and for equalizing pressure in the converters.

1. To check the converters for pressure equalizing, do as follows: fill th КПЖ-30 converters with nitrogen under a pressure of 10 atm. gauge. Then slowly release pressure from one converter through the pressure release valve by o or two atm. gauge; in this case pressure in the second converter must become equal to that in the first one in one or two minutes.

Pressure must be released from both vessels in turn.

2. To check the converters for shutting off the vessels, do as follows: ill the КПЖ-30 converters vessels with nitrogen under a pressure of 10 atm. gauge. Then sharply release pressure from one converter through the release valve to 0 atm. gauge. Pressure in the second converter must not drop more than y 4 atm. gauge during 5 minutes.

Note: Checking the operation of the shut-off valve should be performed with the valves after the evaporators closed.

Faults of КПЖ-30 Converters

1. If the connection is found leaky, tighten it up. In case tightening is of no effect, replace the gasket.
2. If the safety valve is leaky at 10 atm. or fails to operate at 11.0 - 11.8 atm. gauge, remove and replace it by a new one.
3. If the automatic pressure increase valve fails (fails to close at 8.3 to 8.5 atm. gauge), replace it by a new one.

Prior to fitting the emergency valve, wash the line up to the automatic unit with liquid oxygen. For this do as follows:

(a) remove the oxygen valve;

(b) plug the line after the valve running to the receiver;

(c) by means of the second automatic unit increase pressure in the converter and force out liquid oxygen through the KB-5 valve ahead of the removed automatic unit.

4. If considerable evaporativity of oxygen from the КПЖ-30 converter is detected, check the converters for evaporativity using the Description of the КПЖ-30 converters.
5. If oxygen coming out of the converter has an unpleasant smell, the converter must be removed and washed.
6. Prior to the installation of a new converter on the aircraft in the event of replacement of the КПЖ-30 converter, check the new converter according to the Description of the КПЖ-30 converter.

Washing the Vessel of КПЖ-30 Converter

On detecting unpleasant smell of oxygen coming out of the КПЖ-30 converter wash and degrease the converter. For this do as follows:

1. Disconnect the pipe of the line from the KB-5 valve after the evaporator, the pipe of the shut-off valves from the cross-piece, pipes from the pressure release valve, the safety valve and the oxygen level indicator transmitter.
2. Remove the converter from the-aircraft having unscrewed the attachment bolts.
3. Disassemble the converter and remove the vessel and the evaporator from the casing.
4. Fill the vessel with 6 litres of tetrachlorated carbon or pure gasoline; tilt the vessel and turning it round its axis during 10 minutes wash the vessel walls.
5. Force out the liquid with nitrogen through each pipe in turn.
6. Fill the evaporator completely with tetrachlorated carbon and then blow out the carbon. Repeat the procedure three times.
7. After the vessel has been washed with tetrachlorated carbon wash it with alcohol as described above. Washing with alcohol should be done not less than two times until the alcohol coming out of the vessel is quite transparent.

[redacted]

50X1-HUM

8. After washing the vessel with alcohol thoroughly scavenge it with dry oxygen or nitrogen (free from oil) till no smell is felt any more. Scavenge t vessel through each pipe in turn plugging the rest.

9. The fittings and pipes should be washed with alcohol and scavenged to

10. During scavenging check whether the washing is done properly. For thi hold a piece of white linen cloth against the stream of emerging gas and chec it for dark deposit.

11. The washing completed, assemble the converter.

12. Apply paste, grade НАО-22 , to all threaded connections. Dilute the paste just before the assembly of threaded connections. Paste, grade НАО-22, contains 15 gr of glycerine, 4 gr of dextreen and 32 gr of litharge.

To prepare the paste, fill a mortar with glycerine, add dextreen and thoroughly grind the mixture. Then add litharge and grind it to obtain uniform compound.

Cover the pipe union thread (but not the nut thread) with a thin uniform layer of paste. This done, assemble the threaded connection.

When screwing the threaded connection again, remove the old paste from the face of the thread.

13. The assembled converter should meet the following requirements:

(a) the evaporator must be arranged concentrically inside the case. The rubber stops must uniformly expand the evaporator relative to the vessel;

(b) the vessel must not move crosswise or lengthwise inside the case;

(c) the pipes must not come in contact with the nearest parts and each other;

(d) after assembly check the converter for leakage by means of dry medic oxygen or nitrogen under a pressure of 10 atm. gauge. Check the gastightness means of soap - suds. This done, wipe the connections with a clean piece of cloth moistened with rectified alcohol.

14. Fill the completely assembled converter with liquid oxygen and check the operation of the automatic pressure increase valves.

15. When checking the serviceability of the converter, do as follows:

(a) plug the non-return valve and the pipe unions OXYGEN LEVEL INDICATOR TOP (УРОВНЕМЕР ВЕРХ) and OXYGEN LEVEL INDICATOR BOTTOM (УРОВНЕМЕР НИЗ); connect a pressure gauge and the pressure release valve to the pressure releas pipe communicated with atmosphere;

(b) increase pressure in the converter. For this close the pressure rele valve and open the valves ahead of the automatic pressure increase valves;

(c) watch pressure increase; in the converter filled by not less than 90 per cent, a pressure of up to 8.3 to 8.5 atm. gauge is reached during 3 or 5 minutes (but not in excess of 10 minutes), then pressure stops increasing.

In 10 or 15 minutes after pressure increase the pipes ahead of the automatic unit must get warm as at such a pressure the automatic pressure increase valves are closed;

(d) note the time up to the moment the safety valve starts bleeding; with the sound automatic pressure increase valves this time must be not less than 45 minutes;

(e) in an hour after the beginning of the safety valve bleeding set the amount of consumption to 0.5 kg per hour. At this pressure must drop to 10 atm gauge and leakage through the valve will stop;

(f) set oxygen consumption to 6 kg/sq.cm.; pressure in the converter must not drop below 8 atm. gauge.

16. Check the evaporativity of the converter without pressure. Evaporativ

without pressure is the amount of oxygen in grams lost per hour during the storage of oxygen under atmospheric pressure due to warm air coming from the outside. To check evaporativity, fill the converter with 30 or 32 kg of liquid oxygen and in four hours weigh it for the first time (during the first four hours evaporativity is increased due to the thermal capacity of the vessel). The second weighing of the vessel should be done in 16 or 20 hours after the first one; the difference of weight in grams divided by the time in hours between the weighings is the evaporativity of the converter. The evaporativity must not exceed 250 gr per hour.

Note: When checking evaporativity, take particular care to plug the non-return valve and the OXYGEN LEVEL INDICATOR BOTTOM (УРОВНЕМЕР НИЗ) pipe union because leaks greatly increase evaporativity. It is recommended to fit conical plugs of aluminium foil packing over the conical surface of the pipe union or flat plugs of the АМгМ material.

17. All the operations and test results must be recorded in the Service Log.

Care of КПК-30 Converter

1. Prior to flight and after flight it is necessary to subject the converters to careful examination for mechanical damage.

2. See that the vessels of the КПК-30 converters contain not less than 2 kg of liquid oxygen at all times.

3. It is not recommended to leave a small amount of liquid oxygen in the vessel because during evaporation in the remaining oxygen there are concentrated impurities, in particular substances of unpleasant smell which will be absorbed by newly filled oxygen.

4. Take care to protect the converters from oil and grease.

5. Liquid oxygen always contains lubricating oil which gets into oxygen during the production of the latter. During the service of the converters this oil settles down on the vessel walls therefore the vessels should be washed (degreased) periodically.

Faults of Distant-Reading Liquid-Oxygen Indicator, Type ДУЖК
(Fig.47)

1. With the power supply switched on and pressure drop changed in the transmitter, the indicator pointer does not move. This may take place if there is no proper contact in plug connectors. To eliminate the fault, check the supply line and repair it if broken.

2. If the instrument reading errors exceed the permissible values, tighten up the union nuts where the pipe lines are connected to the vessel and check the system for leakage or check the bunched conductors lines and eliminate the defect.

Checking КПК-30 Converters for Evaporativity

After the КПК-30 converters have been installed in the aircraft, as well as every three months and on expiration of the guaranteed period of service life, the КПК-30 converters should be tested for evaporativity.

Check the converters for evaporativity by means of the КУ-4 testing device as follows:

1. Close the КВ-5 valves ahead of the automatic pressure units and after the evaporators.

[redacted]

50X1-HUM

2. Open the pressure release valve of both vessels of the КПЖ-30 conver

3. Fill the КПЖ-30 converters with the amount of liquid oxygen required the next flight as prescribed in the Section "Filling the КПЖ-30 Converters with Liquid Oxygen".

4. After filling, disconnect from the cross-piece the КПЖ-30 converter pipes connecting the shut-off valves to the КПЖ-30 converters and plug the ca piece pipe unions.

5. From the tee-piece in the pressure release line disconnect the pipe running to the pressure gauge and connect the pipe union of the tee-piece to a of the КУ-4 testing device rheometer.

6. In four hours after fitting the vessels with liquid oxygen close the pressure release valve and during two hours every 15 minutes measure by the rh meter the amount of gas coming out of the converter (in litres per minutes). Average the results of all measurings.

7. Convert the average capacity of losses thus obtained (in litres per minute) to units of weight (in grams per hours) using the graph of Fig.55 tak into account the ambient air temperature. The permissible amount of losses ca by evaporativity is not in excess of 250 grams per hour at a temperature of 15 ± 5°C. At a temperature of 30 to 50°C the amount of losses increases by 50 to 90 grams per hour, while at temperature of -20 to -30°C it decreases by or 60 grams per hour.

8. After checking the converter for evaporativity, open the pressure rele valve, connect the pipes joining the shut-off valves with the cross-piece on t КПЖ-30 converter and connect the pipe running to the pressure gauge with the tee-piece in the pressure release line.

Note: On completing the test of the vessels for evaporativity make record in a special Log; indicate the number of the aircraft, the number o the КПЖ-30 converter vessels and the amount of evaporativity.

Faults of КП-24М Economizer

1. If the high and low-pressure cavities are out of repair, replace the apparatus by a new one.

2. In case leakage is detected in the valve of the economizer, connect th КМ-30М mask to the apparatus and make several deep inhalations. If leakage persists, replace the apparatus by a serviceable one.

Note: In the event of replacement of the КП-24М economizer prior to installation on the aircraft check the economizer by the Descripti of the КП-24М apparatus.

Faults of КП-24М Set

Repair of the КП-24М economizer set involving disassembly and adjustment is not permitted in field conditions. In this case the items to be repaired should be replaced by new ones; the removed items must be sent to repair shop

Leakage in High-Pressure System

If during the high-pressure system leakage test the pressure gauge indic tions decrease, the system is leaky.

Detect leaky places by means of soap-suds.

As a rule, leakage is detected by tightening up the union nuts. However, leakage in the system is sometimes caused by a leaky economizer valve. This being the case, replace the faulty apparatus by a new one.

Leakage in Low-Pressure System

In case the low-pressure system is leaky, the best way of detecting the leak is to divide the low-pressure system into several sections. Suppose that the leaky low-pressure system is divided into three sections:

1st section - from the mask (with the mask-to-face tightness compensator connected to it) to the excessive pressure limiter.

2nd section - from the pipe union of the hose running to the КП-23 apparatus and to the elbowed pipe union with a union nut of the КШ-24 hose.

3rd section - КП-24М economizer.

When checking the 1st section, close the hole in the excessive pressure limiter lock with a hand and make a long but not deep inhalation. If it is impossible to inhale, the 1st section is gastight.

The check over, connect the excessive pressure limiter lock to the pipe union of the hose running from the КП-23 apparatus.

To check the 2nd section, disconnect the КШ-24 hose from the КП-24М apparatus, close with a hand the hole in the hose elbowed pipe union and make a long but not deep inhalation. If it is impossible to inhale. the 2nd section is gastight.

After the check-up, connect the КШ-24 hose to the КП-24М apparatus. Before doing so, check to see that the apparatus valve is closed, the air dilution switch handle is set to the CLOSED (ЗАКРЫТО) position and the МК-13М pressure gauge pointer is at zero.

When checking the 3rd section, make a long but not deep inhalation. If you cannot do so, the 3rd section is gastight. If it is possible to make an inhalation, the low-pressure cavity of the КП-24М apparatus is leaky. This being the case, replace the defective apparatus by a new one.

Bear in mind that the gastightness of the low-pressure system depends to a great extent on the condition of the rubber gaskets fitted in each joint. Therefore, pay special attention to the joints and replace unserviceable gaskets by new ones in due time.

Faults of КМ-30М Mask

1. A faulty exhalation valve. In most cases the leakage of the exhalation valve is caused by dust, sand and other foreign objects getting under the valve. On detecting leakage, wash the valve with a pad moistened with clean water or blow it with oxygen (without dismantling the valve and the mask). This done, retest the valve for leakage. If the valve is still leaky, replace the mask by a new one.

2. Leaky connections of the mask with the mask-to-face tightness compensator and the hose running from the КП-23 apparatus. In such cases replace the gaskets and then retest the connections for leakage.

3. Leakage in the mask body, corrugated hose and mask-to-face tightness compensator. In such cases replace the mask and the mask-to-face tightness compensator by serviceable ones.

4. Leakage in the excessive pressure regulator valve. This being the case, replace the mask by a serviceable one.

Faults of КШ-24 Hose

Leakage in the hose (Fig.49) closed with a plug. This being the case, replace the gasket of the plug. If the leakage is not eliminated, replace the hose by a serviceable one.

[redacted]

50X1-HUM

Faults of ИП Flow Indicator of МК-13М Pressure Gauge and М-1000 Excessive Pressure Gauge

1. The glass is broken, the body is cracked, the luminous compound has come off.

2. The indicator blinkers fail to react to inhalations and exhalations.

In case one of these faults is detected, replace the flow indicator or the pressure gauges by serviceable ones.

Faults of КВ-5 Valves

1. Leakage in the valves cavities.

2. Leakage in the valves flap.

If at least one of the faults is detected, the valves should be replaced by new ones.

Faults of Tee-Pieces with Non-Return Valves

Leaky non-return valves. To eliminate leakage, disassemble the unit with non-return valves, wipe the valves and seats with a piece of gause moistened with pure gasoline (without oil); at this take care to see that all foreign particles (white or brown deposit) are removed from the valves and seats. Next, wash all the parts of the disassembled unit in pure gasoline (without oil), blow them with oxygen and assemble. Check the newly assembled unit for leakage.

If the unit with non-return valves is still leaky, do as follows:

(a) replace defective valves and seats in the unit by new ones or

(b) replace the entire unit by a serviceable one.

Faults of КП-23 Parachute Oxygen Breathing Apparatus

1. The apparatus is leaky.

2. The disconnector operation is improper (the box of the КП-24М economiser is disconnected with difficulty).

3. The non-return valve of the change-over switch is leaky (oxygen leaks out after the disconnector has operated).

If at least one of these faults is detected, replace the apparatus by a serviceable one.

POST-FLIGHT INSPECTION

1. Open hatches (if they are closed) to obtain access to the oxygen equipment.

2. Check oxygen pressure in the line by the pressure gauges, type МК-13М.

3. In accessible places examine pipe lines and their attachment, oxygen panels and instruments.

4. Check the amount of liquid oxygen remaining in the КПЖ-30 converter by means of the ЖУК liquid oxygen level indicators. In case of necessity add oxygen.

5. Record pressure in the vessels of the КПЖ-30 converter by the pressure gauges mounted near the КПЖ-30 converter.

6. Check the gastightness of all connections on the КПЖ-30 converters (without releasing pressure).

7. Make sure that the safety valve is serviceable. If pressure in the apparatus amounts to 11 or 11.8 atm. gauge the safety valve must be open. If pressure in the apparatus is below 10 atm. gauge, the valve must be tightly closed.

The permissible leakage through the safety valve at 10 atm. gauge is not in excess of 200 cu.cm.per minute.

8. Check the КП-24М economizer set. For this:

(a) carry out outside examination of the КП-24М economizer mask, mask-to-face tightness compensator and the РД-24 regulator; check to see that the items are free from damage and moisture;

(b) check the operation of the КП-24М economizer.

9. Close the КВ-5 valves ahead of the automatic pressure increase units and after the evaporators on the КПЖ-30 converters.

10. Release oxygen from the pipe lines and converters by opening the emergency cock of the КП-24М economizer at each oxygen station.

11. Close the КВ-5 valves at oxygen stations.

12. Wipe the masks with a piece of gauze soaked with alcohol and place it together with the mask-to-face tightness compensator and the corrugated hose into special bags located at the working stations of each member of the air-crew.

13. Examine the parachute apparatus and send them out for storage at depots or to special workshops.

14. To save liquid oxygen, do not release pressure from the КПЖ-30 converters.

15. If it is necessary to add liquid oxygen to the КПЖ-30 converters, release pressure from the apparatus.

16. If any faults are detected during the flight or inspection, eliminate them in compliance with the Section "Possible Faults".

17. Put cases on the КП-24М economizers.

PRESSURE RELEASE

Open the pressure release valves by 1/4th of the knob turn and then slowly (during 3 or 5 minutes) open the valves completely.

Determine complete pressure release by the pressure gauge.

Note: During pressure release intensive evaporation of liquid oxygen in the vessel takes place. The amount of oxygen which has evaporated is directly proportional to the amount of warmth absorbed by the liquid oxygen. The maximum amount of liquid oxygen which may evaporate during pressure release is equal to 10 kg. This corresponds to pressure release when the apparatus vessel contains 25 or 27 kg of liquid oxygen completely heated to the boiling point at a pressure of the safety valve releasing. If the apparatus vessel contains less liquid oxygen, the amount of evaporating oxygen during pressure release will be proportionally less.

STORAGE OF LIQUID OXYGEN IN КПЖ-30 CONVERTERS

It is permitted to store liquid oxygen in the КПЖ-30 converters in sealed vessels under pressure and without pressure.

Storage of Liquid Oxygen in Sealed Vessels of КПЖ-30 Converters

If the КПЖ-30 converters are filled with liquid oxygen 12 or 16 hours before flight, it is recommended to close the КПЖ-30 converters in an hour after filling. For this close the pressure release valves and the valves after the evaporators (if they are open).

[redacted]

50X1-HUM

Leave the converters in this condition as at evaporativity of 250 grams per hour no oxygen will be lost during this time because the entire amount of the warmth coming to the vessel from the outside will be spent for warming up liquid oxygen.

Pressure in the vessel will increase gradually. The storage period of liquid oxygen in the КПЖ-30 converters closed vessels without losses is from 27 to 46 hours.

Note: The less liquid oxygen is contained in the apparatus, the less is the time of its storage in closed vessels without losses, because less heat is required for warming up oxygen to the boiling temperature at a pressure of safety valve releasing.

The approximate time required for increasing pressure in a closed vessel to a pressure of safety valve releasing depending on the amount of liquid oxygen in the converters is given in Table 16.

Table 16

Time Required for Safety Valve Releasing Versus Amount of Liquid Oxygen and Evaporativity

Weight, kg	Amount of warmth Q, cal.	Time required for increasing pressure to 10 atm. gauge at evaporativity, grams per hour		
		150	200	250
25	360	46 hours	35 hours	27 hours
20	280	35 hours	25 hours	21 hours
15	210	26 hours	20 hours	16 hours
10	140	16 hours	13 hours	10 hours

Here Q is the amount of warmth in calories required for heating liquid oxygen to 10 atm. gauge.

Storage of Liquid Oxygen in КПЖ-30 Converters under Pressure

If the КПЖ-30 converters are in the operating condition, liquid oxygen in the КПЖ-30 converters vessels can be stored under pressure. For this close the КВ-5 valves ahead of the automatic pressure increase unit and after the evaporators. Do not open the pressure release valves as during pressure release losses may amount to 10 kg.

When storing liquid oxygen on the КПЖ-30 converters under pressure, looses do not exceed 6 kg a day.

Storage of Liquid Oxygen in КПЖ-30 Converters without Pressure

If the vessels of the КПЖ-30 converters are filled with liquid oxygen two days before flight it is recommended to leave the pressure release valves open for 16 or 20 hours and then close the vessels, that is close the pressure release valves.

PRECAUTIONARY MEASURES

1. Protect all pipe line joints and apparatus elements from oil and grease.

2. When filling liquid oxygen, fence the place where oxygen is drained (from the pressure release valve).

3. The overalls of the personnel engaged in filling the КПЖ-30 converters with liquid oxygen and in testing the system should be clean and free from grease stains. The ground near the aircraft must be cleaned from oil and kerosene.

4. When filling the apparatus with liquid oxygen and testing the system, it is prohibited to smoke, to light matches, etc.

5. Be careful when filling the apparatus with liquid oxygen and see that no liquid oxygen gets onto the skin to avoid frost biting (burns).

6. Prevent moisture from getting into the vessels of the КПЖ-30 converters and pipe lines as on filling the vessels with liquid oxygen water is turned into ice, which might cause failure of the apparatus.

7. Prior to filling liquid oxygen remove the case of the fuselage compartment (in the Ф-3 cabin) in the area of the pressure release drain holes.

8. Take care not to spill liquid oxygen as all organic substances moistened with liquid oxygen are explosive and inflammable until oxygen is completely evaporated.

Quality of Oxygen

Fill the vessels of the КПЖ-30 converters only with medical liquid oxygen. Oxygen must have a Certificate indicating whether it meets the requirements specified by Item 2 of State Standards (ГОСТ) 6332-52

INSTRUCTIONS FOR PACKING PARACHUTES WITH КП-23 OXYGEN BREATHING APPARATUS

Fig.50 shows the position of the КП-23 oxygen breathing apparatus in relation to the seats of the aircrew members, which ensures safe and reliable disconnection of the КП-23 apparatus disconnectors during ejection.

To prevent the breathing apparatus hoses from being broken place them into the seats very carefully. In doing so observe the following order:

1. On the navigator's seat lay the short oxygen hose of the КП-23 breathing apparatus through the weight lightening hole in the seat right-hand arm rest as shown in Fig.51.

CAUTION. It is strictly prohibited to pass the oxygen hose through clamp 3 (Fig.51) as during ejection the snap hook of the КП-23 apparatus locking pins may stick in the clamp. As a result the oxygen disconnector will fail to get disconnected and the supply will fail to change over from the aircraft mains to the КП-23 apparatus.

2. On the pilots' seats when connecting the apparatus hoses to the aircraft hoses pass the short oxygen hoses into the seat arm rests through the cuts in the arm rests to prevent the apparatus hoses from being broken.

3. Prior to placing the parachute on the navigator-operator's seat pass the short hose of the КП-23 breathing apparatus through the hole in the rear part of the seat pan right-hand side. If the hose is passed into the hole of the side after the parachute is placed on the pan, the hose must be sharply beat which causes its rapid wear.

[redacted]

50X1-HUM

4. On the gunner-radio operator's seat see that the parachute does
towards the seat back otherwise the oxygen hose will be crumpled by the
hand arm rest.

5. The parachute with the КП-23 breathing apparatus is freely arra
the gunner's seat, and no special instructions on packing are required.

ELECTRICAL EQUIPMENT

GENERAL

The electrical equipment of the aircraft, model ТУ-16 , consists of D.C. and A.C. power supply sources, aircraft electric mains and electric power consumers.

The major D.C. power supply sources of the aircraft are four generators, type ГСР-18000 , of 18-kW power each; the generators operate in parallel and are connected to the aircraft mains to produce a total power of 72 kW, 28 - 28.5 V.

Apart from the generators, the aircraft is provided with a starter-type storage battery, type 12САМ-55; the battery operates in parallel with the generators and serves as a stand-by power supply source.

For A.C. power supply the aircraft is equipped with two ПО-4500 inverters which invert direct current into alternating current of 115 V, 400 c.p.s.

The aircraft electric mains consists of wires gauging from 0.35 to 95 sq.mm and incorporates switching equipment, as well as control and protective devices. The mains uses mainly non-shielded and shielded wires, mark БПВЛ, the airframe being used as the minus wire. In order to lighten the weight of the electrical equipment the D.C. electric power distribution lines are made of aluminium wire, mark БПВЛ.

Direct and alternating currents are consumed by various instruments and units provided with remove control facilities, as well as by complex automatic systems (the autopilot, cannon system fuel quantity and flow gauging equipment, etc.), signalization means, heating, de-icing, illumination equipment and radio equipment.

The aircraft electric mains is connected to ground power supply sources through two ground-supply plug connectors; one of the plug connectors is used for connecting D.C. ground supply sources, whereas the other - for connecting A.C. ground power supply sources.

AIRCRAFT ELECTRIC MAINS

The entire electric mains system of the aircraft consists of two major sections:

1. The D.C. circuit of 28-28.5 V supplied from the ГСР-18000 generators and the storage battery, which is connected for buffer operation with the generators.

2. The single-phase A.C. circuit of 115 V, 400 c.p.s. which is supplied from the operating or stand-by inverter, type ПО-4500.

To ensure effective all-condition operation of the aircraft, the D.C. circuit is divided into three subcircuits:

(a) the normal supply circuit;
(b) the emergency supply circuit;
(c) the dual supply circuit.

[redacted]

50X1-HUM

As a rule, connected to the normal supply circuit are all the four generators and the storage battery (Fig.52). The generators and the storage battery are connected separately and therefore they may be connected to the normal supply circuit in any combination, for example: one generator and the storage battery or two generators and the storage battery, and so on.

Connected to the emergency supply circuit can be only one generator (either generator 2 installed on the left engine, or generator 3 installed on the right engine) and the storage battery.

With the aid of switching contactors, type КП (КП-200Д КП-400Д), the dual supply circuit is automatically connected either to the normal supply circuit (in case it is energized) or to the emergency supply circuit if the normal supply circuit is de-energized.

The schematic distribution diagram of D.C. supply system (of the aircraft mains system) is presented in Fig.53.

The normal, emergency and dual supply mains provide power supply to three groups of distribution busbars:

1. The normal supply busbars which are connected only to the normal supply circuit.

2. The dual supply busbars connected to the dual supply circuit.

3. The triple supply busbar which is usually connected through a special change-over switch to the dual supply circuit and, consequently, is energized from the normal or emergency supply circuit. In case of failure of the normal and emergency supply circuits this busbar is manually reset for direct supply from the storage battery.

The distribution busbars have no direct connection to the emergency supply circuit.

The normal supply busbars feed such power consumers which are necessary for normal operation of the aircraft but which can be done without in emergency conditions. Such power consumers are: the autopilot, de-icers, heaters, ventilators, camera equipment, part of the illumination system, etc.

The dual supply busbars feed such consumers which make it possible to fulfil the mission and to return to the home airfield even in case of the faulty normal supply circuit. Such power consumers are: the bombing system, flight control and navigating instruments, fuel system pumps, landing flap actuator, L.G. warning system, part of illumination system, etc.

The triple supply busbar (the busbar which provides battery supply of the instruments with the mains de-energized) supplies voltage only to such power consumers which are absolutely necessary for accomplishment of a forced landing of the aircraft in case of failure of the normal and emergency power supply circuits. These consumers are: the main gyro horizon, bank-and-turn indicator of the pilot, remote indicating astrocompass, type ДАК-ДБ-5 , heater of the upper left pitot tube, type ТП-156 , circuit No.1 of the interphone system and the emergency illumination system (the ultra-violet illumination lamps of the pilot's and navigator's instruments panels, the receptacle of the pilot's extension lamp and the illumination system of the КИ-12 compasses), automatic brake control unit, drag chute system, engine blow-off band control system, CO_2 bottle control system, fuel shut-off and stopcock control system and radio station, type РСИУ-3М.

Three consumers: the feeder of the in-flight engine starting, the feeder of the top emergency bomb dropping system and the radar transponder destructor feeder are connected directly to the storage battery and may be used at any moment without additional switching and change-over operations on the power supply sources.

additional switching and change-over operations on the power supply sources.

Operating Duties of Electric Mains

In view of the necessity of voltage supply to some power consumers even in conditions when separate sections of the electric supply mains are damaged the D.C. electric power distribution system is designed to allow three operating duties:

- normal;
- emergency;
- de-energized mains duty, when only consumers of vital importance are connected to the storage battery.

Normal duty. In the normal operating duty the electric mains, as a rule, connects all the four generators and the storage battery. In this case energized are all the busbars of the normal supply circuit; the busbars of the dual supply circuit and the busbar which supplies the instruments from the battery with the mains de-energized (the triple supply busbar).

To select the normal operating duty, it is necessary that the switches and selectors located on the generator control panel (Fig.55) at the radar operator's station should be placed to the following positions:

1. The switches of all the four generators and the battery-to-normal supply circuit blocking switch should be ON.

2. The storage battery change-over switch should be thrown to NORMAL (НОРМАЛЬНО).

3. The voltmeter change-over switch should be turned to NORMAL SUPPLY CIRCUIT (НОРМАЛЬНАЯ СЕТЬ).

4. The emergency supply circuit switch should be in the OFF position.

5. The change-over switch connecting the generators to the emergency supply system (bearing the inscription FROM GENERATOR (ОТ ГЕНЕРАТОРА) should be placed to LEFT No.2 (ЛЕВЫЙ)

6. The change-over switch bearing the inscription BATTERY SUPPLY OF EMERGENCY INSTRUCTIONS (ВКЛЮЧЕНИЕ АВАРИЙНЫХ ПРИБОРОВ НА ПИТАНИЕ ОТ АККУМУЛЯТОРА) should be thrown to OFF.

7. The switch with the label GROUND SUPPLY (АЭРОДРОМНОЕ ПИТАНИЕ) should be OFF.

Note: The storage battery blocking switch is rigidly fixed to the generator emergency switch connecting bar; this means that when at least one of the generator switches is ON, the storage battery blocking switch is also engaged.

In case of failure of part of the generators, connected to the normal supply circuit may be three, two or even one generator in combination with the storage battery. When connected to the normal supply circuit are three generators plus the storage battery, the number of connected consumers is unlimited, that is, the flight may be continued in the same conditions, as if all the four generators were operating. In case the normal supply circuit connects only two generators plus the storage battery connected simultaneously may be either the cannon system with continuously operating consumers or the tail unit de-icers with continuously operating power consumers. It is forbidden to connect the cannon system and the tail unit de-icer system simultaneously. When it is only the combination of one generator and the storage battery which is connected to the normal supply circuit, the total number of power consumers connected should ensure that the total load does not exceed 600 A.

Emergency duty. In case a shorting appears in the normal supply mains (th trouble will be indicated by beyond-scale movement of the ammeter needles and b decreased-voltage indications of the voltmeter) or in case of another trouble which requires disconnection from the normal supply circuit, the radar operator should quickly select the emergency supply circuit which is de-energized in the normal operating duty serving as a stand-by circuit.

When flying with the supply mains in emergency duty, the circuit in operation connects one of the two generators (generator 2 on the left engine or generator 3 on the right engine) and the storage battery. In this case energiz are: the emergency supply circuit, the dual supply basbar and the triple supply busbar. The normal supply circuit and its busbars are disconnected and de-energized.

To change from the normal to the emergency operating duty the following sw ing should be done on the generator control panel at the radar operator's stati (Fig.54):

1. Operate the generator emergency disconnection lever to disengage all th four generators and the storage battery from the noraml supply circuit.

2. Turn the emergency supply circuit switch ON.

3. Place the voltmeter change-over switch to the EMERGENCY SUPPLY CIRCUIT position.

4. As a result (See the Diagram in Fig.54):

(a) the storage battery will get disconnected from the normal supply circuit;

(b) all the four main differential undercurrent relays, type ДМР-600 , will disconnect the generators from the normal supply circuit;

(c) generator No.2 will become connected to the emergency supply circuit through its additional relay, type ДМР-600.

When sure (by the ammeter and voltmeter readings) that the emergency supp circuit and generator No.2 operate normally, the storage battery change-over switch should be placed to the EMERGENCY POSITION (АВАРИЙНО); this action wil connect the storage battery to the emergency supply circuit for buffer operatio with the generator.

Notes: 1. In case left generator No.2 or its circuit is faulty, the generator change-over switch should be turned to the RIGHT No.3 (ПРАВЫЙ №3) position. In this position connected to the emergency supply circuit instead of generator No.2 (installed o the left engine) will be generator No.3 located on the right engine.

2. At the moment of the emergency supply circuit selection it is necessary to disconnect the inverter, type ПО-4500 , so as not to overload the generator with large starting currents during its connection to the circuit. Upon engagement of the generator it is necessary to re-engage the inverter.

In the course of emergency-duty flying it is allowed to use only those power consumers which are connected to the dual supply busbars (See Table 17) and to the triple supply busbar (See Table 18).Under these conditions the fly time has no specific limitations.

In case the emergency supply system is faulty it is necessary to select th de-energized mains operating duty.

De-energized mains operating duty. Under the headlined duty conditions the normal and emergency supply circuits will be de-energized, and the storage

battery will supply only those consumers which are vitally important for flight continuation (See Table 18). The following operations should be carried out on the generator control panel at the radar operator's station to select the duty in question:

1. Turn on the change-over switch labelled BATTERY SUPPLY OF EMERGENCY INSTRUMENTS (ВКЛЮЧЕНИЕ АВАРИЙНЫХ ПРИБОРОВ НА ПИТАНИЕ ОТ АККУМУЛЯТОРА).

2. Turn the emergency supply circuit switch off.

3. Turn the storage battery switch off.

4. Turn off the switches of the four generators and the blocking switch of the storage battery.

5. Turn the voltmeter change-over switch to STORAGE BATTERY (АККУМУЛЯТОР).

CAUTION: The storage battery, type 12-САМ-55, is capable of supplying the instruments listed in Table 18 for not longer than two hours.

Table 17

Consumers Connected to Dual Supply Busbar

No.	Description	Protector of consumer and type of fuse	Marking of feeder
1	2	3	4
1	Fuel flow controller, left	АЗС-5	АГ
2	Fuel flow controller, right	АЗС-5	АД
3	Bomb emergency dropping control	АЗС-5	ВА
4	Electric bomb release supply (release of bombs armed)	АЗС-15	ВБ
5	ARMED-SAFE system	АЗС-10	ВВ1
6	Armed emergency dropping system	АЗС-10	ВВ2
7	Fuze circuits, left front	СП-5	ВВа
8	Fuze circuits, right front	СП-5	ВВб
9	Fuze circuits, left rear	СП-5	ВВг
10	Fuze circuits, right rear	СП-5	ВВг
11	Bomb amergency dropping control relay	АЗС-2	ВД
12	Bomb emergency dropping control relay	АЗС-2	ВЕ
13	Armed bomb release blocking relay	АЗС-2	ВЖ
14	Armed bomb release blocking relay	АЗС-2	ВМ
15	Emergency bomb dropping system supply	НП-50	ВН
16	Sight supply	АЗС-15	ВП
17	Supply of bomb release variant selector box, type КЗСБ-48	АЗС-5	ВР
18	Rear adapter disconnecting relay	АЗС-2	ВО
19	Starting system supply	АЗС-25	+3
20	Air cock of left engine	АЗС-5	1зА
21	Left engine starting system	АЗС-15	1зВ
22	Left engine starting system control	АЗС-5	1зН
23	Left engine ignition system	АЗС-20	1зП
24	Air cock of right engine	АЗС-5	2зА
25	Right engine starting system	АЗС-15	2зВ

[redacted]

50X1-HUM

1	2	3	4
26	Right engine starting system control	АЗС-15	2аВ
27	Right engine ignition system	АЗС-20	2аИ
28	Inverter, type ПО-4500, stand-by	ТП-200	
29	Fuel pump of left tank No.19	ИП-15	МБа
30	Fuel pump of left tank No.16	ИП-50	МБб
31	Fuel pump of left tank No.10	ИП-75	МБв
32	Fuel pump of left tank No.2	ИП-75	МБг
33	Fuel pump of right tank No.3	ИП-75	МБд
34	Fuel pump of left tank No.4	ИП-75	МБе
35	Fuel pump of right tank No.5	ИП-75	МБж
36	Fuel pump of left tank No.6	ИП-50	МБз
37	Fuel pump of right tank No.6	ИП-50	МБи
38	Fuel pump of right tank No.10	ИП-75	МБк
39	Fuel pump of right tank No.16	ИП-50	МБл
40	Fuel pump of right tank No.19	ИП-15	МБм
41	Fuel stopcock of left engine	АЗС-5	МБф
42	Fuel stopcock of right engine	АЗС-5	МБх
43	Fuel shut-off cock	АЗС-5	МБц
44	Air position indicator (dead reckoning computer system , type НИ-50Б	АЗС-5	АК
45	Flap actuator, electric motor No.1	ИП-150	МЩ
46	Flap actuator, electric motor No.2	ИП-150	МУ
47	Ultra-violet illumination of pilot's instrument panel and overhead electric control board	АЗС-2	ОУ
48	Directional gyro of pilot	АЗС-5	ПА
49	Gyro horizon set of pilot	АЗС-5	ПБ
50	Gyro horizon set and directional gyro of co-pilot	АЗС-5	ПГ
51	Three-pointer indicator, type ЗМИ-3Р, of right engine	АЗС-2	ПД
52	Fuel quantity gauge of left engine tanks	АЗС-2	ПЕ
53	Fuel quantity gauge of right engine tanks	АЗС-2	ПЖ
54	Fuel flow gauge of left engine tanks	АЗС-2	ПЗ
55	Fuel flow gauge of right engine tanks	АЗС-2	ПИ
56	Fuel pressure gauge	АЗС-2	ПК
57	Three-pointer indicator, type ЗМИ-3Р, of left engine	АЗС-2	ПМ
58	Bank-and-turn indicator of co-pilot	АЗС-2	ПУ
59	Flap position and free air temperature indicator	АЗС-2	ПХ
60	Range-finder, type СД-1	АЗС-2	РА
61	Radio compass, type АРК-5, No.1	АЗС-2	РК
62	Radio compass, type АРК-5, No.2		РЛ

1	2	3	4
63	ILS equipment	АЗС-10	РМ
64	Aircraft transponder	АЗС-5	РО
65	Radar bomb sight, type РБП-4, (control)	АЗС-20	РП
66	Command radio station, type РСИУ-3М	АЗС-5	РЭ
67	Antenna duplexer of radar altimeters, types РВ-2 and РВ-17	АЗС-2	РЩ
68	Left tank group fuel pump warning system	АЗС-2	СБ
69	Bombing equipment warning system	АЗС-5	СВ
70	Right tank group fuel pump warning system	АЗС-2	СД
71	Hydraulic system warning unit	АЗС-2	СГ
72	Cabin sound warning system	АЗС-2	СВ
73	Mach limit warning system	АЗС-2	СМ
74	Differential pressure warning unit of front cabin	АЗС-2	СО
75	Fire warning unit of left tank group	АЗС-15	СП
76	Fire warning unit of right tank group	АЗС-15	СУ
77	Follow-the-leader bombing procedure lamps	АЗС-15	СФ
78	Colour flare bomb normal release system	АЗС-20	СХ
79	Colour flare bomb bay doors warning system and release control interlock	АЗС-2	СЦ
80	Colour flare bomb emergency dropping system	ИП-30	СЧ
81	Colour flare bomb station status indicator	АЗС-2	Сп31
82	L.G. warning system	АЗС-2	СШ
83	Colour flare bomb emergency dropping control	АЗС-2	СЩ
84	Heaters of Pitot tube of co-pilot, radar operator, radio operator, НИ-50Б air position indicator and ОПБ-11р sight	АЗС-10	ТП
85	Control of stand-by pumps of tanks No.16	АЗС-2	УБд
86	Control of stand-by pumps of tank No.6	АЗС-2	УБе
87	Remote-indicating compass	АЗС-2	УД
88	CO_2 bottle control	АЗС-10	УЕ
89	Emergency fuel jettison valve system	АЗС-2	УЖ
90	Control of stand-by inverter, type ПО-4500	АЗС-2	УИ21
91	Bomb bay doors control (normal)	АЗС-5	УЛ
92	Bomb bay doors control (emergency)	АЗС-5	УП
93	Flap control,electric motor No.2	АЗС-5	УУ
94	Fuel flow control	АЗС-2	УЧ

[redacted]

1	2	3	4
95	Flap control, electric motor No.1	A3C-5	УЛ
96	Control of first fuel pump group of left engine	A3C-5	Уа1
97	Control of first fuel pump group of right engine	A3C-5	Уа2
98	Control of second group fuel pumps	A3C-5	Уа3
99	Control of third group fuel pumps	A3C-5	Уа4
100	Control of fourth group fuel pumps	A3C-5	Уа5

Table 18

Consumers Connected to Triple Supply Busbar for Storage Battery Supply of Instruments in Case of De-Energized Mains

No.	Description	Protector of consumer and type of fuze	Marking of feeder
1	Emergency ultra-violet illumination of front cabin and illumination of КИ-12 compasses	A3C-5	OA
2	Gyro horizon set, master	A3C-5	ПБ
3	Bank-and-turn indicator of pilot	A3C-2	ПП
4	Interphone system channel No.1	A3C-5	PA1
5	Interphone sets СПУ-10	A3C-2	PA-20
6	Heaters of ТП-156 Pitot tube of pilot, navigator and velocity head warning unit CCS-3	A3C-5	ТЯ
7	Automatic brake control unit	A3C-10	АУ
8	Engine blow-off band control system		
9	CO_2 bottle control system	A3C-10	УЕ
10	Drag chute control system	A3C-5	УС
11	Fuel shut-off and stopcocks control system	A3C-5	M6
12	Radio station, type РСИУ-3М	A3C-5	P7
13	Radio transponder destructor	No protection	3A31
14	De-energized mains bomb release	No protection	3C
15	In-flight engine starting system	No protection	3П

Protection of Electric Mains

The electric mains of the aircraft is built up of separate feeders. Termed "feeder" is a single consumer or a group of power consumers supplied through a separate protective device (a circuit breaker or fusible cutout).

The following protective devices are used for protection of the aircraft mains and power consumers:

(1) Automatic circuit breakers of A3C family.

(2) Glass fuses of СП family.
(3) Delayed-action fuses of ИП family.
(4) High-heat fuses of ТП family.

Automatic circuit breakers of A30 type (Fig.56) are employed for automatic disconnection of electric power consumers, as well as for protection of electric wires against dangerous over-loads and short circuits in electric circuits. The circuit breakers can be used for manual on-off switching operations on electric circuits, in which case they function as ordinary single-pole switches. However, the largest part of the circuit breakers installed in the aircraft act as fuses, and therefore they should be always turned on before each flight and held in this position throughout the entire flight. The automatic circuit breaker is engaged manually by its operating handle. In overload and short-circuit conditions the circuit breaker is cut out automatically; under normal loading conditions the circuit breaker is disengaged manually.

The circuit breakers are mounted in D.C. circuits with nominal voltage of 28 V, as a rule, in locations where they are easily accessible in flight. The following range of automatic circuit breakers is used on the aircraft: A3C-2, A3C-5, A3C-10, A3C-15, A3C-20, A3C-25, A3C-30, A3C-40 and A3C-50 (the hyphenated figure indicates the nominal voltage the circuit breaker is rated for).

Fuses, types СП, ИП and ТП (Fig.57), are designed for protecting electric units from short-circuit currents and continuous, although small overloads. Delayed-action fuses ensure normal protection and at the same time withstand instantaneous current surges(300% and even 600% of rated currents) which are characteristic for the operation of some electric units.

Fuses, type СП, are installed in A.C. circuits, in permanent-load D.C. circuits, and at places difficult for in-flight access.

Fuses, types ИП and ТП, are installed in electric actuator supply circuits and are also used for group protection of the electric power distribution system and for the generators protection (See Figs 53 and 54).

Fuses of all the usable types are mounted on the aircraft in various-type boxes. The following ranges of fuses are used on the aircraft: СП-1а, СП-2а, СП-5, СП-10, ИП-5, ИП-10, ИП-15, ИП-30, ИП-35-2, ИП-75, ИП-100, ИП-150, ИП-200, ИП-250, ТП-600 and ТП-900 (the hyphenated figure denotes the nominal voltage the fuse is rated for).

Note: Fuses, type ИП, which have polarity marking should be installed in compliance with the polarity identification, i.e. attaching the fuse to the supply busbar with its hook lug which corresponds to the plus sign marked on the fuse cap. This is a must, as the operating characteristic of these fuses depend on the polarity of the current applied to them.

For the arrangement and layout of the protective devices on the panels and boards see Figs 58, 59, 60, 61, 62 and 63. The general layout diagram of the aircraft protective devices is presented in Fig.64.

Wiring

The electric mains of the aircraft consists of wires, marks БПВЛ and МШВ, coated with coloured insulation, and of aluminium wire, mark БПВЛА, with white insulation.

All the wires belonging to the armament system are of red colour, those of the radio equipment system - of light blue colour, the A.C. mains wir coloured yellow, and all the other wires are of white colour.

To ensure radio interference suppression, part of copper wires used shielded (wire, mark БПВЛЭ). For the same reason, part of copper wires encased in common anti-interference braidings.

The wires are fitted in the terminal lugs, individual connectors ar connections by means of upsetting, while their connection to plug connect terminals, to warning light fittings, miniature relays and other instrum effected by soldering, use being made of ПОС-40 or ПОС-50 solders and For the types of wire fittings and terminations used on the aircraft see in Fig.65.

The wires of the aircraft electric mains are coded in letters and fig Each wire should be coded over its entire length every 400 - 500 mm, and bear at least six code markings every 50 mm by the wire end. Wires, mark are coded only at their ends: three code markings every 50 mm. Apart fron put on the end of each wire prior to its fitting are vinyl pipes carrying wire identification marking.

Wires and vinyl pipes are marked in НЦ-52 paint with the aid of met stamps, the marking procedure being as follows:

1. Prior to marking an electric wire or vinyl pipe, clean the wire surface from moisture and dust using a clean cloth for this purpose.

2. Stir up the НЦ-52 paint and pour it on to a felt pad (State Stan ГОСТ 288-53) contained in a metal case.

3. Inspect the stamp and in case it is fouled wash it in rectified

4. Coat the stamp with the paint covering the pad and mark the wire vinyl pipe.

5. The wire or the vinyl pipe marked, dry it during 20 to 30 minutes a temperature of 15 to 20°C.

The plotted markings should be well discernible. The marking may be with use of special devices or with the aid of an automatic wire marker, available.

<u>Note</u>: It is allowed not to mark the following wires:

(a) in bonding jumpers;

(b) in internal wiring jumpers of control boards, boxes, ins panels and other units if the wire does not run out of respective unit and if the wire length does not exceed 1

(c) all wires whose length does not exceed 200 mm;

(d) wires connecting electric units to the airframe if it is to trace them over their entire lengths from the unit to structural member they lead to.

In conditions noted in Points (b) and (c) it will be the vinyl pipes the end of each wire which are to be marked.

Separate wires of the aircraft electric system are ganged in bunches "bunched conductors") with the aid of thread bandages. The bunched conduc numerical or compound numerical and letter markings which are placed on rings fitted around the bunched conductors.

Metal tags are provided at points where the bunched conductors are b out of the electric units and over the entire length of the bunched condu at points most accessible for inspection. No tags are attached to bunched conductors of smaller-than-10-mm diameter.

Used as connecting links between separate wires and bunched conducto

cables. The term "cable" is used for a single wire or a group of wires which interconnect any two electric units. Cables have letter and numerical markings; identification letters stand for:

I - cables of the front pressurized cabin;
Ц - cables of the centre plane and the non-pressurized section of the fuselage;
КЛ - cables of the left outer wing panel;
КП - cables of the right outer wing panel;
С - cables of the rear pressurized cabin;
МЛ - cables of the left engine;
МП - cables of the right engine;
Х - cables of the tail unit.

The figure which follows the identifying letter denotes the ordinal number of the cable for the given electric unit of the aircraft.

The above-mentioned cable designations are indicated in all the feeder and schematic wiring diagrams available, but as a matter of fact these designations are present on the aircraft only in case of a single-cable conductor: the conductor tag in this case reads the cable designation. In all other cases, when bunched conductors consist of several cables, the identification tags carry only numerical data to indicate the line number of the given bunched conductor on the aircraft.

<u>Laying and Removing the Cables</u>

When laying or removing cables, keep it in mind that the electric system is built up as a single-wire circuit, the airframe being used as the minus wire. The single-wire circuit sets fourth the following requirements:

1. The plus wire should be insulated with utmost thoroughness. Any contact of an energized current-carrying element (wire lugs, plug connector terminals and the like) with the airframe results in short-circuiting.

2. The minus wire of the electric equipment should be reliably connected to the airframe. The connection should ensure minimum contact resistance (not in excess of 100 microohms) which is accomplished by cleaning the contact points from dielectric coatings and by secure attachment of the minus wire lug to the airframe.

3. The insulator maximum resistance of the aircraft mains relative to the airframe is the requirement to be fulfilled. For each feeder the insulator resistance of the plus wire (at the relative air humidity of 70%) should not be smaller than:

(a) 10 megohms if the feeder supplies up to three consumers;

(b) 8 megohms if the feeder supplies more than three consumers;

(c) the insulator resistance of the electric power distribution system wires should not be smaller than 1 megohm.

<u>CAUTION</u>. NEVER lay or remove wires when the electric system is energized.

Wires with damaged insulation are subject to replacement. To replace a wire:

1. Disconnect the damaged wire from the equipment.

2. Slacken the bunched conductor attachment yokes and loosen all the thread bandages on the section of the wire to be replaced.

3. Withdraw the damaged wire and lay the new one. The gauge, colour and the marking of the newly laid wire should be identical to those of the replaced wire.

[redacted]

50X1-HUM

4. Re-bandage the conductor with Mackay threads and fasten up all the slackened yokes of the bunched conductor.

In case of rupture or partial replacement of wires gauging from 0.35 to 8.8 sq.mm it is allowed to joint the wire ends by means of fixed connections shown in Fig.66. It is not recommended to butt-joint wires gauging over 8.8 As an exceptional measure, it is allowed to couple the wires by way of fitti the wire ends in terminal lugs with successive jointing of the lugs with the of a bolt and a nut; the jointing over, the connection should be thoroughly insulated with a vinyl pipe and vinyl tape.

In case all the wires of a bunched conductors are damaged, and the dama portion of a separate wire constitutes not less than 100 mm, the defective bunched conductor should be removed and replaced. The new bunched conductor should be made according to the respective Drawing or to the model of the bunched conductor to be replaced. To make a new bunched conductor:

(a) prepare and mark the required quantity of wires of corresponding ga and colours;

(b) collect together and bind the wires in a bunch according to the mo of the damaged bunched conductor;

(c) put vinyl pipes with respective marking on the wire ends;

(d) carry out termination of the wire ends.

The wire or the bunched conductor replaced, identify it with the aid of testing lamp or a voltmeter; then, referring to the feeder diagrams, check th insulator resistance of each feeder comprising the repaired bunched conducto For examples on circuits for testing separate sections of the electric syste see Figs 67 and 68.

Note: When checking by the diagram presented in Fig.68 the method of connecting the megohmmeter is the same as when testing with employment of the circuit presented in Fig.67.

The capacitors the puncture voltage rating of which is smaller than the voltage developed by the megohmmeter should be disconnected and tested separa ly.

When testing the continuity of the electric circuit of any electric unit, it is necessary to insulate the circuit from all the other electric circuits.

Before connecting the minus wires to the airframe, the contact place on the structural member should be thoroughly cleaned from its protective coati this done, the lugs of the minus wires should be tightly bolted to the airfra and painted red.

Electric Wire Maintenance

After every two or three flights all the electric wires must be inspected and all the faults detected should be corrected.

The electric wire maintenance procedure consists of the following operati

1. Wipe dry the wires covered with oil or hydraulic mixture. Fasten up th loose attachment fittings of shielded bunched conductors to prevent radio inte ference which is likely to appear due to insufficient tightness of attachment.

2. Check plug connectors for secure coupling and lock their union nuts.

3. Check the through bolts in power leads, pressurized cabin bottoms and contact blocks for secure fastening.

4. Check all the minus wire-to-airframe contact points. If the red locking paint is deteriorated, it is required to tighten up the attachment screw, to check the contact resistance value which should not exceed 100 microohms, and re-apply red paint to the contact point.

Note: When wires gauging 5.15 sq.mm and heavier are attached to the airframe, the wire lug surface contacting the airframe structural member should be coated with a layer of anti-corrosion paste used in aluminium wire fittings; this done, it is necessary to reliably secure the lug, to wipe the place dry all around, to check the contact resistance value and to apply red locking paint.

5. When replacing a separate aircraft unit, make sure that the contact resistance of the newly installed unit does not exceed the value specified in Fig.69.

Maintenance of Junction Boxes and Electric Control Boards

Electric power is distributed within the aircraft electric system through different distribution arrangements (electric control boards, panels and junction boxes) which are provided with various-kind switching, control and protection equipment. The layout of electric control boards and panels, as well as of junction boxes, is presented in Fig.70, (a) and (b).

After a prolonged period of operation or parking of the aircraft it is necessary to check all the junction boxes, as well as electric control boards and fuse panels, the check-out procedure running as follows:

1. Check the cover locks for intactness and reliability.

2. Check the condition of wires' insulation at points where they are inserted into their boxes and electric control boards; inspect for adequate wire termination.

3. Check the contacts for reliable coupling. Use a nut wrench to tighten up the nuts on contact bolts of plus and minus connections.

4. Check and, if such a necessity arises, tighten up the contact connections on the on-off and change-over switches, circuit breakers, etc.

5. Check the switching arrangements (on-off switches, change-over switches, rheostats, relays, buttons, contactors and the like) for secure attachment and sound operation.

6. Remove dust, dirt or moisture from the junction box or the electric control board and wipe it with a dry cloth.

7. Use a dry cloth to clean those portions of the supply busbars which bear traces of oxidation or dust.

8. Check all the fuses indicated in the attached diagram for availability, their integrity and for meeting the current intensity rating requirements, as well as for secure fitting of the СП -type fuses in their holders. If it is revealed that some fuses are missing or faulty, mount or replace the fuses.

9. Inspection over, close the cover of the box, panel or electric control board and lock the cover, if it was not locked before the inspection.

CAUTION: Never repair or check units mounted in junction boxes, electric control boards and panels when the aircraft electric system is energized.

Specific Features of Aluminium Wire Maintenance

With the view to lightening up the aircraft weight, the electric power distribution system is wired principally with aluminium wire, mark БПВЛА , gauging from 35.0 to 95.0 sq.mm. The current-carrying core of these wires is made of the material, grade AT, and consists of separate (twisted together) wires the gauge of which (1.08 to 1.4 sq.mm) is much heavier than that of cop wires.

In clean and dry air it is characteristic of aluminium wires to get coat with a thin non-conductive oxide film which prevents the metal from further oxidation. However, moisture and gas contaminated air may become a favourabl medium for intensive electro-chemical corrosion of aluminium. Apart from thi when in contact with some metals or alloys (copper, for example), aluminiu makes up a couple prone to intensive corrosion.

Oxide film on the aluminium surface adversely affects the contact betwe the wire conductors and between the wire and the lug which may result in volt drop and excessive overheating at the wire termination point.

In order to preclude the probability of oxide film formation and corrosi the ends of aluminium wires are sealed by upsetting wire ends in special copp lugs which are hot-soldered (to obtain a heavier coating) and are filled with special anti-corrosion paste (a mixture of petrolatum with zinc powder).

<u>CAUTION:</u> NEVER use electrolytically treated copper lugs with holes for aluminium wire termination.

Upon upsetting the terminal lug and checking the contact resistance, the bare portion of the wire is to be wrapped with sealing tape, mark J20A.

Next to their terminal lugs the aluminium wires are provided with identi tion marking: a red ring on a vinyl pipe or a red vinyl pipe fitted on the wi

If it occurs that in the course of operation the terminal lug of an alum wire brε ks or the lug gets out of contact with the wire, the repeated wire should be carried out as follows:

1. Remove the wire from the aircraft.

<u>Note:</u> It is allowed to terminate (fit) aluminium wires directly on the aircraft only in top urgency cases, for example, when removal of t wire from the aircraft calls for large-scope demounting operations other equipment.

2. Cut off the broken conductors of the wire or the defective lug, and remove the insulation from the wire end, having previously shifted the vinyl with the label along the wire. The insulation should be removed from the wire only with the aid of an electrothermal tool since no cuts and other mechanical damage are tolerated on the wire conductors.

3. Having stripped the wire end, coat it from outside with a thin layer of anti-corrosion paste and then clean it with a special metal brush to remov oxide film from the wire conductors.

4. Half-fill the lug sleeve with anti-corrosion paste (to expell air fro it) and fit the lug onto the wire.

5. Using a special device for fitting aluminium wires of the given gauge, upset the lug on the wire.

6. Check the degree of lug upsetting; the dimensions of the pressed rec (Fig.71) should be within the limits specified in Table 19 below.

[redacted]

50X1-HUM

Table 19

Key to Values Indicated in Fig.71

Wire gauge, sq.mm	Dimension, mm		
	A	B	C
35	12	5.2 - 5.6	13 - 15
50	12	6.8 - 7.2	15 - 17
70	16	7.2 - 7.6	16 - 18
95	16	8.2 - 8.6	17 - 20

7. Measure the contact resistance between the upset lug and the wire using n ammeter and millivoltmeter according to the circuit diagram presented in Fig.71. To measure:

(a) connect the wire under check to a D.C. power supply source with rated oltage of 28 to 28.5 V and power not exceeding 7.5 kW;

(b) using an excitation rheostat, determine the intensity of current through reference to the ammeter) flowing in the wire. The intensity should not xceed 140, 180, 200 and 225 A for wires gauging 35, 50, 70 and 95 sq.mm, espectively;

(c) place one of the probes of the millivoltmeter in the middle of the pset portion of the lug and connect the other probe to the yoke fitted around he bare section of the wire;

(d) calculate the contact resistance according to the formula: R = V/I, here I is the current passing in the wire at the moment the measurement is eing taken (as read by the ammeter), and V is the voltage drop in the wire ermination point (as indicated by the millivoltmeter). The contact resistance hould not exceed the limits specified in Table 20. If the contact resistance till surpasses the indicated limits, the lug should be cut off, the wire should e terminated anew, and contact resistance should be checked once more.

Table 20

Tolerated Contact Resistance Values for Aluminium Wire Lug Terminations and Tolerated Bend Radii of These Wires

ire gauge, sq.mm	Contact resistance (in microohms) at temperature of 20 to 22°C	Tolerated bend radius of wire, mm	
		1	2
35	up to 20	50	30
50	up to 15	60	40
70	up to 12	100	60
95	up to 10	150	100

8. Use a clean piece of cloth or gauze to remove superfluous anti-corrosion ste from the portion to be tapesealed. Tightly wrap tape, mark 20 A, around e bare portion of the wire until completely covered, and then use a 10-mm de tape to wrap around the lug and the insulation so that the tape would erlap them 2 to 3 mm. Cover to tape surface with talc and fit the vinyl pipe th the tag over the lug.

[redacted]

50X1-HUM

Note: Due to the fact that aluminium is an easily corroded material, all the operations covering the lug-to-wire fitting and sealing of the termination should be completed during not longer than one hour.

9. Record the work done in the aircraft Service Log, with indication of contact resistance of the fitted lug.

10. Mount the wire on the aircraft. In view of the fact that aluminium wi are much less flexible than copper wires, no sharp bends should be involved i their mounting.

Small-radius bends of aluminium wires result in displacement of conducton of the wire at the fitting point and in increased contact resistance at the w point. Therefore the bend radii of aluminium wires should be not smaller than those specified in column 1 of Table 20.

If it proves impossible to maintain the specified radii during mounting operations (at the inlets into boxes, control panels and the like), resort my be made to the radius values specified in column 2 of Table 20. In the latter case the lug should be put onto the wire bent to the radius indicated in Table 20, and the wire should not be bent after the fitting operation.

Regulation and Check-Out of Bonding Arrangements

Due to the fact that the airframe is used in the function of the minus wi all the units and items of aircraft equipment are reliably bonded to ensure normal operation of electric power consumers, to reduce to the minimum radio interference, as well as to eliminate the probability of local overheating and electric corrosion of separate units and joints.

The following bonding methods are used:

1. Connection of all the aircraft structural members and equipment into an integral system by means of rivets and bolts.

2. Provision of special bonding jumpers which interconnect separate stru tural members of the airframe and connect the aircraft equipment to the airfra

The maximum allowable values of contact resistance between separate aircraft structural members are indicated in Fig.69. The maximum allowable contact resistance for all the other structural members and equipment units of the air craft is divided into the following major groups:

(a) 50 microohms - at installation points of ballast resistors, type EC-1

(b) 100 microohms - for points of direct coupling of all the ignition sys screens and for points at which the manifold pipes are connected to the engin body;

(c) 200 microohms - at installation points of decoupling capacitors and filters;

(d) 600 microohms - at points of direct coupling of parts and units;

Note: Tolerated in some cases for directly coupling parts is contact resistance as high as 2000 microohms (for covers, access panels, doors, etc.).

(e) 2000 microohms - for bonding jumper connections of parts and units.

However, in some cases it proves possible to obtain smaller contact resis ance values which considerably improves the aircraft bonding characteristics.

Contact resistance is checked with the aid of low-resistance meters, type HMC-3, or with special microohmmeters of high accuracy class, with division value not more than 100 microohms.

It should be always remembered that poor bonding in any aircraft system reates even heavier radio interference (due to appearance of additional vari- ble contacts) than a completely unbonded system. Therefore, unlike other ypes of aircraft mountings, the bonding system requires constant care. This pecially refers to the engine bonding systems which should be paid the great- st attention since the engines carry large masses of metal and mount a great mber of units which are sources of radio interference.

In the course of operation some bonding jumpers may get broken, or the onding jumper-to-airframe contact may become loose. The other problem is absent- inded neglect of providing bonding arrangements for all the newly installed ff-shelf items. There are other problems, too.

In view of all this, the aircraft bonding system should be systematically nd thoroughly checked and maintained throughout the entire service life of the ircraft. The maintenance procedure consists in the following:

1. Checking all the electric cables of the engine group for secure attach- ent and reliable contact with the engine body.

2. Checking the integrity of all the bonding jumpers installed on the air- raft; special attention should be paid to the bonding jumpers installed on the ircraft engines.

3. Tightening up loose jumpers and check-out of static dischargers for leanness.

4. Replacement of all unusable or broken bonding jumpers with due anti- orrosion provisions.

When installing a bonding jumper:

(a) use an end cutter or emery paper No.00 to clean bright the contact surfaces of the bonding jumper lugs and of the bodies to be bonded;

(b) mount the bonding jumper seeing to it that its resistance value and length are same as those of the replaced bonding jumper; make sure that the bolts attaching the bonding jumper to the airframe element are tight;

(c) measure the contact resistance;

(d) apply red paint, mark A-67, to the cleaned portion of the structural mber, to the jumper lug and the bolt head in the same manner as it was done with the replaced bonding jumper.

5. For effective inspection, it is necessary to take regular selective measurements of contact resistance with the aid of low-resistance meters, type HMC-3 . If it is revealed in the course of inspection that the actual contact resistance values considerably differ from the rated ones, actions should be taken to normalize the bonding system.

OPERATION PECULIARITIES OF D.C. POWER SUPPLY SOURCES

Generator Maintenance

Aircraft generators, type ГСР-18000 , operate in heavy vibration conditions and therefore need systematic and thorough care and inspection.

The generator maintenance procedure consists in the following:

1. Checking the bolts of the generator lead-out wires and all the threaded connections for tight fastening.

2. Checking the pipeline for secure attachment to the generator air delivery branch pipe.

3. Checking the cap for proper attachment to the commutator end shield of the generator; tightening up the nut attaching the cap with the branch pipe to the commutator end shield in case of necessity.

[redacted]

4. Checking the commutator end shield for play-free attachment. The
is likely to play in case of loose attachment of the air pipe to the gene
air delivery branch pipe or due to excessive length of the free portion of
lead-out wires.

5. Checking the commutator and brushes for condition.

To inspect the commutator and those brushes which are accessible, it
necessary to remove the cover band. When remounting the cover band, see t
that the body-mounted pin by all means coincides with the reference hole
band.

If it has been revealed in the course of inspection that the commutat
severely burned and the brushes have been worn out down to a length of 18
the generator should be removed from the aircraft and thoroughly inspected
commutator should be cleaned with sandpaper, the faulty brushes should be
placed, and the generator - tested on a laboratory stand.

Note: The length of brushes should be measured from the side of the
surface of the brush.

Maintenance of Voltage Regulator and of Equipment Operating in Set with Voltage Generator

In the course of operation of voltage regulators, type PУT-82 , the
level adjustment and distribution of leads among the regulators operating
in parallel are effected by means of external resistors, type BC-20. It is
tely forbidden to employ any other method for adjusting the regulator.

Due to wear of the carbon pile and possible sagging of the springs th
pressure applied to the regulator carbon pile is likely to become weakened
incorrect operating conditions the wear of the carbon pile of the PУT-82
age regulator may be so severe that the regulator will be maladjusted to a
tion when the regulator begins to pop. It is forbidden to operate the reg
popping conditions since this leads to burning out and desintegration of t
bon pile.

To prevent popping operating conditions of the voltage regulator, the
lator should be subjected to regular inspection (approximately after every
50 hours of operation) on board the aircraft. The regulator adjustment tes
carried out at high generator speed, and therefore it is advisable to com
generator check with the engine maximum r.p.m. testing.

When the generator is operated with the storage battery disconnected,
cut-in and cut-out take place, the load variation being not less than 50%
the nominal generator rating. If the regulator, due to maladjustment, oper
popping conditions, this operational instability will be detected by oscill
of the voltmeter needle.

The voltmeter check of the regulator allows to determine popping oper
conditions of the regulator. However, checking by this method fails to rev
close-to-popping conditions since in this case popping is present only und
transient operating conditions and disappears quite rapidly. Therefore, co
tions allowing, it is best advisable to carry out the check by listening t
operation of the carbon pile through high-resistance earpieces. For operat
the earpieces should be connected to the wires running from the first and
pins of the PУT-82 regulator plug connector (in a place easiest for acces
to effect several load on-off cycles. If the regulator functions normally,
load cut-out is accompanied by a single click and changed tone in the earp
If the regulator load cut-out is characterised by wheeze, this testifies t

ladjusted regulator. The faulty voltage regulator should be removed from the
rcraft and sent over for adjustment to the repair workshop.

CAUTION: NEVER try to adjust the PУT-82 voltage regulator on board the aircraft by changing the air gap of the electromagnet or by varying the carbon pile pressure.

Apart from voltage regulator adjustment checks, attention should be paid
the course of the aircraft service life to the integrity (condition) of the
res running from the second socket of the regulator plug connector to the
ternal resistor, type BC-20, and from the resistor to terminal Я of the
ability transformer, type TC-8; terminal ЯСТ of the stability transformer
ould be checked for proper grounding. Any breakage in the above-mentioned
rcuit results in a sharp generator voltage increase, in disturbances in the
rallel operating system, and in burn-out of the generator field winding.

Stable operation of the voltage regulator is ensured by the stability
ansformer, type TC-8.

CAUTION. It is forbidden to operate the voltage regulator, type PУT-82, without the stability transformer, type TC-8.

The differential undercurrent relay, type ДМР-600 , the stability transformer,
pe TC-8, the external resistor, type BC-20, and the capacitor, type KБМ-31,
not require special maintenance. In operation, they will be checked only for
ntact tightness of their connected wires and for secure attachment.

CAUTION: NEVER clean the contacts of the ДМР-600 relay or adjust the relay in operating conditions.

Storage Battery Maintenance

When installing the capacity-charged storage battery on the aircraft, it is
cessary to inspect it for condition of the sealing compound, terminals, group
ars and plugs. There should be no cracks in the sealing compound and group bars.
e terminal bolts should have intact thread, and the output busbar lugs as
ll as the surfaces of the terminals contacting the busbars should be cleaned
om oxides.

External inspection over, the plugs (free from fouling) are screwed into the
attery, and the functioning of the valves is checked. Never install plugs which
 not open when the battery returns to the normal operating position after being
lted through 180 and 190°.

Battery Discharge Level Test

The level to which the storage battery has been discharged can be roughly
termined by the voltage produced by the battery under load or by the density
 the electrolyte, the second method being the most correct one.

The battery voltage is measured with the battery connecting (generators
ing OFF) one of the aircraft power consumers rated for a current close to 22 A.
e electrolyte density is gauged with a densimeter.

For the battery voltage and electrolyte density as functions of the battery
ischarge level see Table 21 below.

[redacted]

50X1-HUM

Table 21

Battery Voltage and Electrolyte Density as Functions of Battery Discharge Level

Battery discharge level relative to nominal capacity	Battery voltage (in volts) at 20 A load	Electrolyte density in cells, reduced to 25°C	Note
Charged battery	25 to 24	1.260 ± 0.005	Battery ensures 6 engin startings
Battery discharged by 25%	25 to 24	1.200 - 1.210	Battery ensures 3 to 4 engine startings
Battery discharged by 50%	24 to 23	1.170 - 1.160	Battery may fail to st engine
Battery discharged by 75%	23 to 22	1.120 - 1.110	Engine starting failu to be expected
Battery fully discharged	22 to 21	1.080 - 1.010	No engine starting

After each flight it is necessary to check the battery discharge level. If the battery has been discharged completely or partially (by over 25%), it is necessary to send it for charging to the charging station in not longer than a eight-hour period. After each flying day (night) it is necessary to check the battery discharge level by the electrolyte density. All the charging cycles and the number of engine startings effected by the battery should be recorded in the Service Log of the storage battery.

Inoperative storage batteries should be additionally charged with a current of 3.5 A at least once in a month.

Once in every three months all the storage batteries (both operating and inoperative batteries) should be subjected to a procedure charge-discharge cycle as a measure against sulphating. The results of the operation should be entered in the Service Log of the storage battery.

In the course of operation it is necessary to regularly check the level of density of the electrolyte and add distilled water to the cells. It is forbidden to add electrolyte or acid in the cells unless it is known for sure that the level decrease is due to electrolyte spilling. In the latter case it is neces to add battery sulphuric acid solution of the same density as the density of the electrolyte contained in the cells.

Never expose storage batteries to direct sun rays or place them one onto another.

If cracks are detected in the sealing compound, eliminate them by the melting method. Hot-treat the sealing compound only with the battery discharged and plugs removed, making use of a soldering torch, hydrogen flame or other means.

Storing the Battery

Storage batteries which are in active service and which have been in operation for not longer than half the guaranteed service life period, as well as storage batteries which have passed the Manufacturer's electrical tests (marked with a red strip on the group bar) should be stored with electrolyte in the charged state.

CAUTION: IT IS ABSOLUTELY FORBIDDEN TO STORE ELECTROLYTE-FREE 12-CAM-55 STORAGE BATTERIES WHICH HAVE BEEN IN OPERATION OR HAVE PASSED ELECTRICAL TESTS.

Storage batteries should be placed for storage as follows:

1. Charge the storage battery to capacity.
2. Check and carry out necessary operations to obtain the normal density and level of electrolyte.
3. Install the vent plugs in all the battery cells and wipe the battery surface with rags soaked in a solution of soda or ammonia hydroxide.
4. Wash the battery surface with water and wipe the whole battery dry with clean rags.
5. Clean the clamps and intercell connections of the battery and coat them with a thin layer of petrolatum or grease. This done, the battery may be considered ready for storage.
6. Every month it is necessary to give the battery an additional charge with a current of 3.5 A till there are indications that the battery is charged to capacity. At least once in every three months the battery should be subjected to a procedure operating cycle.

Prior to beginning the operation of a storage battery just removed from storage, it is necessary to give it an additional charge with a current of 3.5 A to obtain constant electrolyte density and voltage.

The storage battery can be stored with electrolyte charged for not longer than six months.

When there is no possibility of storing the battery with charged electrolyte, the storage batteries, type 12-CAM-55, which have been in operation for some time and are not intended to be used during long period of time may be stored discharged, without electrolyte. Before the storage battery is placed for storage, it is subjected to one procedure operating cycle, and then it is discharged with a current of 11 A till the voltage in one of the battery cells drops to 1.7 V. The discharged batteries are turned with their plug holes down and are left in this position during three hours. For complete removal of electrolyte from the battery it is necessary to slightly tilt the battery and give it light shake-ups. It is forbidden to wash the battery out with water before placing it for storage.

Batteries are placed for long-time storage with their blank plugs tightly screwed in and with their surfaces thoroughly wiped dry with clean rags. To prevent bulging of the sealing compound during its storage, the cells should be closed with blank plugs at a temperature of 30 to 45°C inside the battery, for which purpose the battery should be either placed in the corresponding ambient temperature conditions, or warmed up with hot water from the outside.

CAUTION: One-time used storage batteries, type 12-CAM-55, can be stored without electrolyte for not longer than three months.

Main Storage Battery Troubles

All the troubles which are probable to develop in the storage battery can be divided into three categories:

1. Troubles of electrochemical character which can be eliminated by electrochemical methods (by using specially selected charging-discharging conditions).
2. Mechanical troubles which can be eliminated on the spot, by available means.
3. Troubles related to defective plates and group bars; these faults are corrected in special workshops.

[redacted]

50X1-HUM

Troubles in the storage battery can be detected either by external inspe tion or by pertinent measurements during electrochemical tests.

Detected by visual (external) inspection are: cracks in the vessels and bars, leakage of electrolyte, cracks or softened spots in the sealing compou fouling of the external surfaces, breakage of the output pins and intercell connections, poor contact between the output pins and intercell connections, seal of the covers, as well as breakage or fouling of the plugs. The majority these troubles is eliminated right in the using unit.

The troubles mentioned under Items 1 and 3 above can be detected by the battery voltage and voltages of separate cells in the course of the charge-di charge cycle, by the density and temperature of electrolyte and by gas evolv during the charging half-cycle. These troubles can be eliminated only at speci repair workshops or at a charging station.

Following should be the characteristics of a sound battery by the end of its charging:

(1) voltage at each cell - 2.45 to 2.6 V (when alive);
(2) specific weight of electrolyte - 1.260 ± 0.005;
(3) electrolyte temperature - not over 45°C;
(4) almost simultaneous "boiling" and gas formation in all bettery cells
(5) neutral-colour, transparent electrolyte, free from any sediment.

When test-discharged, a sound storage battery should manifest a capacity which is not smaller than 75% of normal capacity.

Peculiarities of Storage Battery Operation in Subzero Temperatures

In those cases when the storage half-battery cells are left in their containers with the aircraft parked at temperatures down to minus 40°C, pri to flight it is necessary to engage the electrical heater system of the containers.

The electrical heater system of the containers can be energized only fro a ground supply source (See the diagram in Fig.54) which is connected to the ground supply plug connector of the aircraft.

When already in flight, i.e. when the storage battery is connected for buffer operation with the ГСР-18000 generators, there is no need in elect heating of the containers even when the ambient air temperature is below zer and down to minus 60°C. This is explained by the fact that while in flight th temperature of the electrolyte in the storage battery cells remains above ze due to operation of the storage battery. The effect of the ambient air tempe ture is considerably reduced due to the use of heat-insulator which lines the interior of each container.

To engage the container heater system, proceed as follows:

1. Connect a D.C. ground power supply source to the aircraft mains.
2. Tightly close the covers of both storage battery containers.
3. Turn on the heater switch located above the left storage battery cont

The heater system is disconnected automatically by means of thermal swit type 777B, which are connected to the minus circuit of the heaters of each container. The switches operate as soon as the temperature at the surface of heating plates reaches 80 ± 10°C.

Connecting D.C. Ground Supply Source

To energize the aircraft electric mains at parking and for engine starti

purposes, the aircraft is equipped with a ground supply plug connector the plug of which is secured in the nosewheel leg well, port side, at frame No.16.

The plug and the mating detachable receptacle of the ground supply plug connector have three pins and three sockets. Two thicker pins are power pins, and they are longer than the third (thinner) pin which is used as a guide element. Such a construction ensures that the power contacts are energized only after the full contact is obtained, which precludes burning of the power contacts when connecting the receptacle.

To connect the ground supply source to the aircraft electric mains, act as follows:

1. Couple the ground supply receptacle (with the ground supply source connected to it) with the ground supply plug.
2. Place the voltmeter change-over switch on the generator control panel at the radar operator's station to GROUND SUPPLY RECEPTACLE (PАП).
3. When sure (through reference to the voltmeter) that the voltage across the terminals of the ground supply plug connector is normal, select the NORMAL SUPPLY CIRCUIT (НОРМАЛЬНАЯ СЕТЬ) position of the voltmeter change-over switch.
4. Turn on the ground supply switch.
5. As soon as the voltmeter begins to indicate that the aircraft mains is energized, it is allowed to begin connecting power consumers, checking their operation by the ammeter and voltmeter.

Ground supply sources are connected to the aircraft electric mains through a contactor, type K-400Д (See Ref.No.32 in the diagram of Fig.54) which operates only with the ground supply switch cut in (See Ref.No.31 in the same Figure).

To disconnect the ground supply source:

1. De-energise all the power consumers.
2. Turn off the ground supply switch on the generator control panel at the radar operator's station.
3. Disconnect the ground supply receptacle.

CAUTION. When the aircraft mains is energized from a ground supply source, it is not advisable to impose a simultaneous load which would exceed 500 A. In case the aircraft mains requires a current larger than 500 A, it is necessary to withdraw the fuses from the storage battery ammeter and ground supply circuits which are installed in the storage battery junction box. In overload conditions use should be made of a special ground ammeter with a scale range exceeding 500 A.

Control over D.C.Power Supply Sources and Electric Mains

Control over the operation of the power supply sources and over the continuity of the electric circuits is effected by means of five ammeters. Four ammeters, type A-3, with scales reading to 100 - 0 - 1000 A are installed in the generator circuits, while the fifth ammeter, type A-2, with its scale reading to 50 - 0 - 500 A is provided in the aircraft storage battery and ground supply circuit.

The ammeters are provided with extension shunts which are located on the distribution panels of the engine compartments and in the storage battery junction box (Fig.72).

The operation of the power supply sources and functioning of the electric circuit are checked by a voltmeter, type B-1, rated for 30 V. By means of a selector switch, type П-46 , the voltmeter can be connected to each of the generators to the normal supply circuit, to the emergency supply circuit, t ground supply plug connector and to the storage battery.

In flight, under normal electric power supply conditions the voltmeter should be connected to the normal supply circuit, and in emergency power sup conditions it should be connected to the emergency supply circuit; in de-energised mains conditions the voltmeter should be connected directly to the storage battery.

All the above mentioned instruments, as well as the selector switch, typ П-46 , of the voltmeter are mounted on the generator control panel installe at the radar operator's station (See Fig.55). In addition, the radio operato instrument panel mounts a voltmeter, type B-1, which measures the normal sup circuit voltage in the rear pressurised cabin.

Basic Technical Characteristics of Ammeters. Types A-1. A-2. A-3 and of Voltmeter. Type B-1

Descrip-tion	Type of instru-ment	Measuring range	Graduation value	Scale gra ation num ing
Ammeter	A-1	40 - 0 - 400 A, with shunt rated for 300 V	20 A	0, 1, 2, 3 and 4
Ammeter	A-2	50 - 0 - 500 A, with Ш-2 shunt rated for 500 A	25 A	0, 1, 2, 3 4 and 5
Ammeter	A-3	100 - 0 - 1000 A, with Ш-3 shunt rated for 1000 A	50 A	0, 2, 4, 6 8 and 10
Voltmeter	B-1	0 - 30 V	1 V	0, 1, 2 a

1. The main error of the ammeter without shunt under normal conditions a at nominal resistance of the connecting wires does not exceed ±2% of the su total of the nominal scale values.

2. The shunt is accurate within ±0.5% of the shunt nominal current rati

3. The main error of the B-1 voltmeter under normal operating conditio should not exceed ±2% of the nominal scale value.

4. The additional error for every 10°C ambient air temperature variatio within plus 50 to minus 60°C should not exceed ±0.5% of the sum total of th nominal scale values for the ammeter, and of the nominal scale value for th voltmeter.

Maintenance of Ammeters and Voltmeters

When the power supply sources are disconnected, the needles of the instruments should indicate zero.

If the instrument needle does not respond to the connection of a power supply source, it is necessary to check the wires for condition and to check whether the contacts at the wire-to-instrument (or to shunts in case of amme connections are reliable.

In short-circuit conditions the ammeter needles swing to the extreme rig position (beyond the scale range) and the voltmeter needle indicates reduced voltage. If, at the moment of connecting a power supply source, the instrum

needle moves in the reverse direction, it is necessary to change the places of the wire ends leading to the indicating instrument.

In case troubles develop inside the indicating instrument, it should be replaced. There is no need in removing the ammeter shunt (if it is intact) since all the ammeter shunts are interchangeable.

If in the course of operation there appears a necessity to replace the connecting wires in a certain section between the indicator and the ammeter shunt, the length and the gauge of the newly selected wires should be identical to those of the replaced wires. Changes in the length and gauge of the wires result in changed resistance of the connecting wires, and other-than-nominal resistance leads to additional instrument errors.

Adjustment of D.C. Power Supply Sources

The generator system adjusting procedure should be started from individual voltage adjustments on each generator with the view to obtaining a voltage of 28.5 V with the aid of the external resistors, type BC-20, and the B-1 voltmeter mounted on the generator control panel at the radar operator's station (See Fig.55).

CAUTION. It is allowed to connect the generator to the aircraft mains only after it has been adjusted for the voltage of 28.5 V.

Generator Voltage Adjustment in Ground Conditions

In ground conditions the generator voltage will be adjusted with the engines running; in the course of the adjusting procedure, the power consumers of the engine accessories group should be energized from a ground power supply source.

To adjust the generator voltage:

1. Place the voltmeter change-over switch to the position corresponding to the generator subject to adjustments.
2. Obtain the engine speed of 3750 r.p.m.
3. Obtain the voltage of 28.5 V by rotating the knob of the BC-20 external resistor of the generator to be adjusted.
4. For a short period of time advance the engine speed to 4100 r.p.m. As a result, the generator voltage should not vary by more than 0.5 V.

The voltage adjusting procedure for all the other generators is absolutely identical to that described above.

Connecting Generators to Aircraft Mains

To connect the generators to the aircraft mains act as follows:

1. Disconnect the power consumers leaving the minimum number of connected consumers which ensure normal operation of the engines.
2. Disconnect the ground supply source and quickly connect all the four generators, one after another.
3. Cut in all necessary power consumers.

CAUTION. Before connecting the generators, see to it that the 12-CAM-55 storage battery is installed in its container.

Adjusting Parallel Operation of Generators

The parallel operation of the generators will be adjusted in flight, in 30 to 40 minutes after the take-off, i.e. as soon as the voltage regulators and the generators are warmed up sufficiently.

The adjusting procedure runs as follows:

[redacted]

50X1-HUM

1. Connect all the de-icer and heater devices. The current load in this case will total:

permanently connected consumers	430 A (approx.)
electric heaters of cabins	340 A
glass panel heaters	190 A
tail unit de-icers	470 A (approx.)
amplidynes and dynamotor of cannon armament system	250 A (approx.)
Total	1680 A (approx.)

Hence, the average load per one generator amounts to approximately 420 A.

To avoid dangerous overloading of any one generator, all the large loads (de-icers and heaters) should be applied in turn.

Upon connection of a power consumer it is necessary to check, through reference to the generator ammeters, whether the current is equally distributed among all the generators. In case the generator current is unbalanced by more than 120 A, it is necessary to level off the generator loading with the aid of the BC-20 external resistors; the voltage of the generators bearing the smaller load should be increased, and the voltage of the heavier-loaded generators should be reduced.

2. Place the П-46 selector switch of the voltmeter to the NORMAL SUPPL CIRCUIT (НОРМАЛЬНАЯ СЕТЬ) position and check the aircraft mains voltage; the voltmeter should read within 28 to 28.5 V. In case of other readings, the volta level of all the generators should be either raised or lowered by the required magnitude. This is effected by rotating the BC-20 resistor control knobs throug one and the same angle.

3. Disconnect the power consumers which are not required for normal flight procedure and check the generator loading by the ammeters. Unbalanced loadings of the generators in small-load conditions is no problem to bother about; howe all the generators should supply current to the aircraft mains. In conditions o very small loading some generators can be disconnected by their respective rela type ДМР-600 This presents no trouble, since, as the load increases, the ДМР-600 relay will reconnect the generator to the mains.

Note: It is necessary to adjust the parallel operation of the generators in each flight. The adjustment should be repeated only if the generator current is unbalanced by more than 150 A at a load amounting to 25 - 50% of the nominal loading, and 120 A at loads exceedin half the nominal rating of each separate generator.

In flight, all the generators should be connected. A generator may be disconnected in flight only in case a trouble has developed in it. In this case the radar operator should report his actions to the aircraft commander.

If fire breaks out on the engine or in the engine nacelle, the fire-fighting system of the aircraft is engaged into operation automatically. In synchronism with the fire-fighting system actuation the engine cowl vent pipe is automatically shut off which stops the generator blowing. Therefore all the generators installed on the engine located in the fire area should be quickly disconnected from the aircraft electric mains. Having disconnected two of the generators, make sure that the total load applied to the operating generators i not in excess of their performances. In case of excessive loading, part of the power consumers should be disconnected.

CAUTION: In conditions when two generators are disconnected from the aircraft mains, it is forbidden to effect simultaneous connection of the cannon syste and the tail unit de-icer system.

Disconnecting Generators from Aircraft Mains

To disconnect the generators from the aircraft mains prior to stopping the engines, act as follows:

1. Disconnect three generators from the aircraft mains.
2. Disconnect all the power consumers from the aircraft electric mains but for channel No.1 of the intercom.set, the stand-by pumps and the engine control instruments.
3. Disconnect the storage battery from the aircraft mains.
4. Stop the engines.
5. Disconnect all the consumers which were left connected.
6. Disconnect the fourth generator from the electric mains.

OPERATION PECULIARITIES OF A.C. POWER SUPPLY SOURCES

Connection of ПО-4500 Inverters and of Ground A.C. Power Supply Source

Connection of ПО-4500 inverters is effected from the generator control panel at the radar operator's station (See Fig.55) by means of a change-over switch, type 3ППН-45 , which precludes simultaneous connection of both inverters.

The operating inverter is supplied with direct current through the storage battery junction box from the normal supply busbar, and the stand-by inverter is energized through the dual supply circuit junction box (mounted at frame No.17) from the dual supply busbar.

For the key circuit diagram of A.C. power supply sources refer to Fig.73.

When connecting the inverter for operation from a ground D.C. power supply source, see to it that a the inverter starting moment the voltage across its terminals is not lower than 20 volts.

CAUTION. NEVER start the ПО-4500 inverter for operation from a ground D.C. power supply source which reduces the voltage across the inverter terminals to below 20 V at the inverter starting moment.

The inverter connecting circuit (See Fig.73) makes it impossible for the inverter to be engaged with its voltage regulator, type P-25B, disconnected.

If (in ground operating conditions) the inverter fails to get disconnected then the 3ППН-45 change-over switch is turned off and the respective АЗС-2 circuit breaker is opened, and goes on operating, it is required to de-energize the D.C. circuit, i.e. to disconnect the ground supply source.

CAUTION. It is FORBIDDEN to uncouple the plug connectors until the ПО-4500 inverter is de-energized.

With the inverter disengaged, it is necessary to check the external supply circuits; if they are faulty, remove the inverter from the aircraft and send it over to the repair workshop.

For A.C. supply of the aircraft electric mains on the airfield, provided in the nosewheel well, starboard, at frame No.16, is a ground A.C. supply circuit junction box with a two-pin plug connector of ШР28П2НШ7 type. The ground supply source is connected by means of a switch, type B-45. located on the

[redacted]

50X1-HUM

generator control panel at the radar operator's station. The design of the ground supply circuit (See Fig.73) makes it impossible to connect the ground supply after one of the aircraft inverters, type ПО-4500, has been engaged.

Inverter Maintenance

To ensure reliable operation of the inverter, type ПО-4500, it is required to carry out its inspections after every 100 operating hours; the inspection procedure will include condition checks of the commutator, slip rings, brushes, brush holders and scavenging with compressed air to remove dust from the brushes.

In case traces of burning are detected on the slip rings or commutator, the elements should be cleaned with sandpaper No.00. During this step of the maintenance operations it is necessary to differentiate uniform dark-colour deposit from real burning; the deposit in question has no adverse effect on the inverter operation and therefore it is not subject to removal.

Should the length of the commutator brushes be worn out down to 16 mm, and the slip ring brushes – down to 14 mm, the brushes are to be replaced. The new brushes should be lapped to the commutator and slip rings with the aid of sandpaper No.00 or ground in at idle running of the inverter during 5 to 6 hours.

The inspection of the inverter over, it is necessary to push the centrifugal switch return button as far as it will go, and to make sure that the inverter is ready for starting.

In case of failure of the voltage stabilizer (which is indicated by higher-than-nominal output voltage and absence of glow in the voltage stabilizer) the faulty stabilizer should be replaced.

The voltage stabilizer replacement procedure is as follows:

1. Open the access hole in the top part of the box having previously unsealed the access panel fastening screw and turned it by 90°.

2. Carefully lift the voltage stabilizer. To replace the voltage stabilizer with your left hand pull back the cap which holds down the voltage stabilizer. Exerting pressure with the index finger of the right hand, move the voltage stabilizer aside, holding it up while doing this. Then, operating with the left hand, install the new stabilizer and fit the cap on.

When replacing the voltage stabilizer, see to it that the coil springs which secure the voltage stabilizer are not expanded excessively and that they are positioned correctly. The axis of the springs should run normal to the horizontal plane; the position of the springs is adjusted by turning the cap on the voltage stabilizer to one or another direction.

3. Close the access hole panel of the box and seal.

4. Enter the reason for the replacement and the number of pre-installation operating hours of the new inverter in the Service Log of the inverter.

If after the replacement it proves impossible to obtain the nominal output voltage value (115 V) with the aid of the voltage level adjusting rheostat, the inverter should be replaced and subjected to thorough inspection at the repair workshop.

CAUTION. NEVER adjust ПО-4500 inverters on the aircraft.

Inverter Probable Troubles Constituting Reason for Its Replacement

Trouble	Indication
In frequency control circuit	
Electric connection of magnetization winding of ДО-25-170 choke with neutralising winding	Sudden r.p.m. drop, Somewhat reduced voltage
Breakage of one A.C. winding of choke	Somewhat increased frequency at idle running (approximately 435 c.p.s)
Breakage of magnetization winding of ДО-26-170 choke	Frequency increases to 500 c.p.s.
Breakage of neutralizing winding of ДО-26-170 choke	Frequency drops to 300 c.p.s.
Shorted turns of ДК-11 mesh choke	Increased frequency
Confused ends of control winding	High frequency, large current of electric motor, heavy starting
No A.C. voltage in the circuit	High frequency, large current intensity of electric motor
In voltage control circuit	
Electric connection of magnetization winding of ДО-12-25 choke with neutralising winding	Voltage drops to 70 V
Shorted (punctured) capacitor rated for 2x0.5 mF	Voltage stabilizer fails to fire, low voltage level
Breakage in magnetization winding circuit of ДО-12-25 choke	Voltage increased to 150 V at idle running and to 130 V under load
Loose contact in voltage stabilizer panel	Voltage increases to 135 V under load and to 165 V at idle running
Breakage in neutralizing winding circuit of ДО-12-25 choke	Voltage drops to 57 V both at idle running and under load
Wrong connection of A.C. coils of ДО-12-25 choke	Inverter voltage is 70 V
Confused interconnections of magnetization and neutralizing windings	Low voltage (55 V), high frequency
Confused connections of TC-11 stability transformer	Voltage elevated to 160 V, negative drop up to 10 V
Mixed polarity in connections of magnetization and neutralizing windings of ДО-12-25 choke	High voltage – up to 130 V
Confused polarity in connections of neutralising winding of ДО-12-25 choke	Low voltage (55 to 60 V), high speed
Confused polarity in connections of magnetization winding of ДО-12-25 choke	Low voltage (60 to 65 V), high speed

[redacted]

50X1-HUM

Control over A.C. Power Supply Sources and A.C. Mains

For control over A.C. voltage of 115 V the radar operator's generator control panel (See Fig.55) is provided with a ferrodynamic voltmeter, type BФ-150.

Specifications of Voltmeter, Type BФ-150

1. Measuring range	0 to 150
2. Main error	±2.5%
3. Additional error for every 10°C temperature variation from normal (+20°C)	±0.8%
4. Additional error for a ±50 c.p.s. frequency variation from mean frequency of 400 c.p.s.	±1.2%
5. Power consumption	2.5 W
6. Operating temperature range	from -60°C to +50°C
7. Weight of instrument	400 gr

Note: Voltmeter errors are given in per cent of full scale.

Maintenance of Voltmeter, Type BФ-150

To ensure correct operation of the instrument, the pre-flight preparation procedure should include a check-up of the voltmeter needle for correct zero position. The check should be carried out before energizing the instrument. The voltmeter needle should be zeroed by means of the corrector screw located on the face panel of the instrument; in the course of zeroing the instrument must be de-energised.

CAUTION. The BФ-150 voltmeter should be checked for its needle position before each flight.

If the voltmeter needle fails to respond to the connection of the ПО-4500 inverter, it is necessary to check the condition of the connecting wires, as well as the integrity and reliability of contact connections. Should other troubles be detected in the course of the voltmeter operation, the faulty instrument should be removed and replaced.

Adjusting and Checking the Operation of ПО-4500 Inverter

It is allowed to connect the inverters for operation with the aircraft A.C. mains only when the aircraft D.C. mains is energized from a ground power supply source or from aircraft generators, type ГСР-18000.

The inverter adjusting and checking procedure is as follows:

1. With the АЗС-2 circuit breakers of the operating and stand-by inverters open, place the generator selector switch on the generator control panel to OPERATING (РАБОЧИЙ). This action should engage the operating (starboard) inverter.

2. At least 5 minutes after, check the inverter voltage by the aircraft A.C. voltmeter. If the gauged voltage differs from the nominal voltage of 115 V by more than 0.5 V, operate the respective inverter voltage rheostat to obtain the voltage of 115 ± 0.5 V.

3. Connect the permanently engaged A.C. power consumers (the radar bomb and gun sights).

4. Check the voltage of the operating inverter, and correct it if the voltage is other than 115 ± 0.5 V.

5. Disconnect the A.C. power consumers.

6. Throw the generator selector switch to the STAND-BY (РЕЗЕРВНЫЙ) position; check and adjust the voltage of the stand-by inverter repeating steps (2), (3), (4) and (5) above.

Note: For uniform expenditure of the service lives of the inverters it is advisable to connect them to the aircraft mains during ground adjustments and to engage them in flight in turn.

ELECTRICALLY HEATED GLASS PANELS

Electrical heating of glass panels prevents their external icing and internal fogging thus providing adequate visibility conditions under any flight conditions encountered.

Electrically heated are the two forward glass panels, type П-13 , (right and left) of the pilots and the lower glass panel, type Н-13 , of the navigator. Each glass panel is an assembly of two hardened silicate glasses butvar-mounted between which is a heater element consisting of thin constantan wires.

The power requirement of the heaters depends on the heated area and constitutes 0.5 to 0.64 W per one square cm. of the heated glass surface. This specific power (0.5 to 0.64 W/sq.cm.) is so large that should there be no sufficient heat dissipation, the operating heater would raise the glass temperature to such a degree which might result in deterioration of the glass. To meet these conditions, provisions are made for temperature regulation. This work is done by thermistors press-fitted in the glass panels and by an automatic temperature controller, type АОС-81М. The АОС-81М controller is installed at the starboard side of the front pressurized cabin in the area of frame No.5. The electric heaters of the glass panels of both the pilot and co-pilot are engaged by means of two B-45 switches located on the overhead electric control board of the pilots (See Fig.90), while the heater of the navigator's glass panel is cut in by the B-45 switch mounted on the navigator's overhead electric control board (See Fig.63). The current energizing the pilots' glass panel heaters is supplied through two К-50Д contactors (See the diagram in Fig.74), while the navigator's glass panel heater is energised through a К-100Д contactor. The power supply lines are protected by delayed action fuses of ИП type (two fuses rated for 75 A each and one fuse - for 100 A).

The fuses and contactors are housed in the glass panel heater junction box (Fig.75) which is installed at frame No.6, starboard.

Maintenance of Heated Glass Panels

When replacing equipment items of the electrically heated glass panel sets, make sure that the equipment is mounted and wired correctly. Special attention should be paid to correct connection of glass panels which have additional lead-outs (the navigator's glass panel, type Н-13). The continuity check will be carried out in compliance with the existing rules, using the methods of identification and measuring the insulation resistance value.

The connections of the thermistor circuits are of no lesser importance. Thermistor No.1 of each glass panel is its operating thermistor. Thermistor No.2 is a stand-by instrument and it is engaged only in case of failure of thermistor No.1.

Note: Thermistor No.1 corresponds to lead 1 on the terminal block, and the operating lead for thermistor No.2 is lead 3. Lead 2 is common for both.

[redacted]

50X1-HUM

If the terminal lead-outs are not numbered, the left lead should considered as the lead of thermistor No.1, and the right lead (as viewed from the *down-oriented* block side) should be taken as corresponding to thermistor No.2.

Adjusting the Glass Panel Heating Degree

When through with the circuit continuity check, it is necessary to adjust (regulate) the degree of glass panel heating; this procedure consists in testing the channels for correct connection and in adjusting the automatic temperature controller, type AOC-81M. The AOC-81M controller has three independent channels each of which controls its connected glass panel.

The adjustment procedure runs as follows:

1. Disconnect the wires from the terminal block of the navigator's glass panel.

2. Connect a test lamp between the plus wire and the airframe.

3. Engage the NAVIGATOR'S GLASS PANEL HEATER (ОБОГРЕВ СТЕКЛА ШТУРМАНА) circuit breaker, type АЗС-2 , on the navigator's circuit breaker control panel.

4. Engage the NAVIGATOR'S GLASS PANEL HEATER (ОБОГРЕВ СТЕКЛА ШТУРМАНА) switch, type В-45, on the overhead electric control board of the navigator. As a result, the test lamp connected to the plus wire of the glass panel heater should flash.

5. Close (through a resistor of 1000 to 2000 ohms) the wires disconnected from the thermistor of the navigator's glass panel heater. This action should result in going out of the lamp connected to the plus wire.

Note: Used in the function of the resistor may be a calibrating resistance rheostat (Fig.76).

6. With the navigator's glass panel heater switch disengaged, connect the thermistor wires and the plus wire to the terminal block without disconnecting the test lamp.

7. Place the slide of the navigator's glass panel heater channel rheostat of the AOC-81M controller to the extreme left position and turn on the switch of the respective glass panel heater.

8. Moving the rheostat slide to either side, check to see if the test lamp flashes up when the rheostat slide is turned to the right and goes out as soon as the slide is moved to the left from the centre.

9. By turning the rheostat slide to the left, and then slowly returning it to the right and farther on, determine the position in which the lamp flashes. At this moment the К-100Д contactor will be engaged and the heater will start its operation. After a certain lapse of time the AOC-81M controller will disconnect the navigator's glass panel heater. As soon as the glass cools down to the pre-established degree, the AOC-81M controller will re-engage the heater.

All the time during the check it is necessary to watch the temperature of the outer surface of the glass panel referring to the thermometer, type ГОСТ 2045-43 . The thermometer ball should be applied to the hottest spot on the glass (See Fig.74), holding it tight against the glass by reans of a piece of cotton wool or felt.

10. After two or three operating cycles of the contactor, the glass surface temperature can be considered to be stable. If the temperature is other than 32 ± 2°C, it is necessary to carry out additional adjustments which is done by turning the slide of the respective rheostat on the AOC-81M controller.

11. Adjustments of the AOC-81M controller over, determine the value of the resistance the AOC-81M controller is adjusted for, and make the corresponding entry in the controller Certificate with the indication of the system resistance and of the glass surface temperature. To do this:

(a) disconnect the wires from the terminal block, and connect a test lamp to the glass panel electric supply cable and the calibrating resistance rheostat to the other two wires;

(b) set a resistance value of 9000 ohms on the rheostat, and then gradually decrease the resistance until the test lamp goes out. The resistance at which the lamp goes out will be the resistance for which the AOC-81M controller is adjusted; the value of this resistance should be within 1500 to 8000 ohms. In case the obtained resistance value is other than 1500 to 8000 ohms, it is necessary to regulate the glass surface temperature by means of the stand-by thermistor, since the conditions indicate failure of thermistor No.1.

12. The heater channels of the AOC-81M controller for the glass panels of the pilot and co-pilot will be adjusted with the same methods as those described above.

13. Once all the three controller channels are completely adjusted, seal the covers closing the rheostats of the AOC-81M controller.

CAUTION. 1. During the check, NEVER short-circuit the wires running to the thermistor and NEVER set a resistance smaller than 1000 ohms on the rheostat, since this will result in failure of the automatic temperature controller, type AOC-81M.

2. IT IS ABSOLUTELY FORBIDDEN to engage the glass panel heaters if the thermistor is disconnected or the AOC-81M controller is maladjusted; same is true when thermistors have internal breakdowns.

3. The automatic temperature controller, type AOC-81M, should be adjusted with employment of a thermometer at ambient air temperatures of minus 10 to plus 25°C as at lower temperatures it may occur that glass surface temperature measurements will be erroneous, while at higher-than-specified temperatures the glass cools down very slowly after its heater has been automatically disconnected.

Use of Glass Panel Heaters

In flight the glass panel heaters will be engaged if icing or fogging conditions are about to be encountered (before cloud-breaking, in haze and mist). When flying in adverse weather conditions, it is advisable to keep the heaters engaged throughout the entire flight.

At parking sites and when taxiing to the take-off position, the glass panel heaters should be engaged only in icing or fogging conditions.

Before going down for landing, as well as prior to taxiing to the take-off position it is recommended to switch off the glass panel heaters for when the heaters are engaged, the additional strains (deformations) resulting from bumpiness (vibration) of the aircraft may render the electrically heated glass panels unserviceable.

CAUTION. Never engage the glass panel heaters with thermistor disconnected or AOC-81M automatic temperature controller maladjusted.

TAIL EMPENNAGE DE-ICERS

Brief

The fin and stabilizer leading edge sections are provided with electrically-operated de-icers. Each de-icer consists of sections, parts and heaters.

The stabilizer de-icer is divided into two sections:

(a) inner section heating the basic (butt) parts of the left and right stabiliser leading edge sections;

(b) outer section heating the end parts of the stabilizer leading edge sections.

The fin de-icer has one section consisting of one part. The inner and outer sections of the stabilizer consist each of two parts located on the left- and right-hand surfaces of the stabilizer. In each section the parts of the stabiliser left- and right-hand surfaces are connected to each other in parallel (See diagram in Fig.93). Each part consists of several heaters connected to each other in series.

Each part of the de-icer sections is provided with bimetal thermoswitches, type 777 B, which cut out the de-icer section when at least one of the parts is heated to a temperature of 80 ± 10°C in the place where this thermoswitch is mounted.

The de-icer sections are energized during 40 seconds and de-energized during 80 seconds. The cycle is ensured by the distributing electrical mechanism, type MKA-3A, switching on the de-icer sections in turn through the K-600Д contactors.

The beginning of switching on the de-icer sections varies in time and depends on the position of the MKA-3A contact device at the moment the MKA-3A electrical mechanism stops; the order of switching on the sections is always the same. The switching on of the inner section of the stabilizer de-icer is always followed by that of the stabilizer de-icer outer section, then by that of the fin de-icer, then again by that of the stabilizer de-icer inner section,etc.

The MKA-3A mechanism is mounted on the port side of the fuselage tail unsealed section at frame No.63. The power contactors, type K-600Д, and fuses, type ТП-600 , of the de-icer sections power circuits are located in the junction box of the tail empennage de-icers (Fig.78) which is also mounted on the port side of the fuselage tail unsealed part between frames Nos 63 and 63a.

The de-icers are switched on by means of the B-45 switch on the pilots' upper electric board. The de-icer operation is checked by a white lamp, type СЦ-51 , which every 80 sec. flashes up for 40 sec. thus warning of the operation of the stabilizer outer section de-icer. The lamp is mounted on the right-seat pilot's instrument panel.

Basic Specifications of MKA-3A Electric Mechanism

1. Nominal voltage	27 V
2. Operating voltage range	27 ± 2.7 V
3. Nominal current at the moment the commutator contacts open	5 A (of inductive load)
4. Nominal current consumed by the mechanism motor	0.8 A
5. Duty of mechanism operation	continuous
6. The electric mechanism must operate normally under the following conditions:	
(a) at relative humidity of ambient air	up to 98 per cent
(b) at change in ambient air temperature	from +50 to -60°C
(c) at vibration and shaking with acceleration	4 g
(d) at sea level altitude	up to 15,000 m.
7. Mechanism service life	300 hours of continuous operation in the course of two years from the moment the mechanism is installed on the aircraft
8. Weight of the electric mechanism	not in excess of 2.4 kg
9. Commutator ensures switching on the contactor windings under voltage according to the following cycles:	
(a) two 60 ± 9-sec. switchings with an interval between them	not in excess of 4 sec.
(b) three 40 ± 6-sec. switchings with an interval between them	same
(c) six 20 -3-sec. switchings with intervals between them	same

Notes: 1. The connection diagram of the MKA-3A electric mechanism ensures the latter operation only according to the cycle indicated in Item "b".

2. The interva' between the switchings is included in the time during which he commutator contacts are closed. Two contacts of one cycle cannot be closed simultaneously.

Care of MKA-3A Electrical Mechanism

During service the MKA-3A electrical mechanism does not require adjustment, maintenance or special care. The attending personnel must only periodically check the quality and reliability of the electrical mechanism attachment, as well as the locking of the plug connector and attachment bolts. On detecting a fault in the MKA-3A electrical mechanism replace it by a new one.

Checking Tail Empennage De-Icer System on the Ground

The ground check of the tail empennage de-icers should be carried out only with the aircraft mains supplied from the ground D.C. power source connected through the ground supply plug connector.

CAUTION. To avoid overheating of the skin and damage to the protective coating, it is not permitted to switch on the electric de-icer with the aircraft mains supplied from the ГСР-18000 generators and with the engines running on the ground.

The de-icer ground test makes it possible to check:

1. The condition of the circuit and the serviceability of the de-icers.
2. The sequence of switching on the de-icer sections.
3. The duration of the de-icer sections switching cycles.
4. Current consumed by the de-icer separate sections at a voltage of 26 V across the heater terminals, that is, provided the de-icers are supplied from the aircraft generators.

Check to see that the surface of the de-icer boots is heated and the de-icer sections are switched on in correct sequence by hand feel. Besides this, the surface of the de-icer boots can be checked for warming up by means of a special instrument which is a thermocouple mounted on a tubular rod adjustable in length. Inside the rod a wire running to the temperature indicator is laid.

[redacted]

When checking temperature by means of the special instrument (thermocouple) th temperature on the surface at any point of any de-icer boot section must exceed ambient air temperature approximately by 30 to 50°C during one cycle of the de-icer section operation.

Check the duration of the switching cycles by means of a stopwatch, with the ТП-600 fuses in the power circuits of the de-icer sections removed.

Consumed current is checked by means of the . 2 aircraft ammeter connecte to the storage battery and ground power supply source.

Complete check up of the tail expennage de-icer system on the ground shou be performed in the following manner:

1. Remove the ТП-600 fuses from the power circuits of all the three sections in the junction box of the tail empennage de-icers.

2. With the de-icer АЗС-5 circuit breaker (on the right-seat pilot's circuit breaker panel) switched on, turn on the tail empennage de-icer switch on the pilot's upper electric board. In t_is case the МКА-3А electrical mechanism must be brought into operation which is indicated by the warning la on the right-seat pilot's instrument panel flashing up periodically.

3. Check the operation of the К-600Д contactors by means of pilot lamps connected to the winding terminals of all the three contactors. The lamps mus periodically flash up.

4. Check the duration of the switching cycles by the pilot lamps.

5. Turn off the de-icer switch at the moment the warning lamp on the righ seat pilot's instrument panel goes out.

6. Install the ТП-600 fuse in the power circuits of all the three de-ic sections.

7. Connect a voltmeter between the aircraft body and the plus terminal (power bolt on the terminal block) of the fin leading edge heater.

8. Turn on the de-icer switch and measure the current consumed by the section of the fin leading edge heater and voltage at this section.

9. As soon as the fin leading edge heater is out, turn off the de-icer switch.

10. In a similar way measure current and voltage on the inside and outsid sections of the stabilizer de-icer.

11. When checking according to Items 8, 9 and 10, simultaneously check by hand feel the serviceability and sequence of switching on the de-icer section Make sure that the inside or outside sections of the stabilizer leading edge heaters start operating simultaneously. Asymmetric operation of the de-icers is not permitted.

> CAUTION. It is prohibited to switch on the tail empennage de-icers on th ground for a longer period than one operation cycle of the МКА-3А electric mechanism.

12. Determine the current consumed by each section of the de-icers at a voltage of 26 V across the heater terminals. The current is to be determined b the formula:

$$I_{26} = \frac{I\ \text{measured} \cdot 26}{V\ \text{measured}},$$

where I_{26} is the current consumed by the de-icer section at 26 V across the heater terminals;

I_{measured} is the current measured during the test of the given section,

V_{measured} is the voltage measured during the test of the given section.

For the fin de-icer the value I_{26} must be within 480 A ± 10 per cent, for the inside section of the stabilizer de-icer - within 450 A ± 10 per cent and for the outside section - within 494 A ± 10 per cent.

If for any section of the tail empennage de-icers the value I_{26} exceeds the permitted limits, make sure that the taken measurements and calculations are correct and only after that replace the defective leading edge sections by new ones.

It is not permitted to eliminate the defects caused by short circuit and the open circuit of the heaters during service.

Instructions for Operation of Tail Empennage De-Icers during Flight

The tail empennage de-icers should be switched on during flight prior to entering the zone of probable icing. The de-icers must be switched off if the surface of the tail empennage leading edge sections is quite free from ice.

Note: When checking the serviceability of the tail empennage de-icers during flight in case no ice formation takes place, it is permitted to switch them on for not more than 5 minutes.

This being the case, the de-icer operation is checked by the warning lamp and consumed current (as measured by the generator ammeters).

WARNING SYSTEM

The aircraft is provided with light and sound warning system. The light warning system consists of warning lamps, type СЛЦ-51, of various colour mounted on desks, boards and instrument panels.

The light warning devices are designed for signalling:

1. preparation of the engines for starting;
2. oil pressure in the turbostarter;
3. operation of fuel pumps and determination of the order of fuel consumption;
4. fire and opening the fuel shut-off cocks;
5. release of the brake parachute;
6. pressure drop in the hydraulic system and operation of the brake automatic unit;
7. landing gear and tail support position;
8. trim tab neutral position;
9. SPEED TOO HIGH (СКОРОСТЬ ВЕЛИКА);
10. switching on the АГБ-2 gyro horizon;
11. armament position prior to aircraft landing;
12. camera tilting mount and camera hatch position;
13. operation of the tail empennage de-icers;
14. charging cocks open position and FUEL DELIVERED (ТОПЛИВО ПОДАНО) warning unit;
15. pressure drop in the pressurized cabins;
16. outside signalling by signal flare launcher.

The types of warning lamps, their arrangement on the aircraft and nature of operation are indicated in Table 22.

[redacted]

50X1-HUM

Light Fitting СШ-51

The light device, type СШ-51 , (Fig.79) is designed for signalling insi the aircraft or for use as a light indicator of the aircraft separate units a mechanisms operation. The light device ensures the possibility of operation under day- and night-time conditions. The reduction of signal brightness by turning the device cover to the right as far as it will go during the night th makes it possible to preserve the adaptation of the aircrew member's eyes to the low brightness background. The position at which all the four holes in th end face walls of the device head and cover are open (the cover with the ligh filter is turned to the left as far as it will go) corresponds to the day ti conditions. Besides the two extreme positions, the cover with the light filt can be set to any intermediate position which corresponds to partial opening o the three triangular holes in the end face walls of the device head and cover.

The aircraft is provided with devices of five colours: red, green, yell blue and white.

The СШ-51 fitting is intended for use with a special aircraft lamp (rat for 28 V and 0.17 A), type CM-30, with a single-contact base 1c-9-1.

The sound signalling is performed by continuous and intermittent buzzing of aircraft horn, type C-1 (Fig.80). The aircraft has two C-1 horns; the arra ment, use and nature of operation of the horns are given in Table 23.

The transmitters of intermittent sound signals are cabin pressure warnin units, type BC-46.

The transmitters of continuous sound signals are:

(a) in the event of aircraft take off with the flaps retracted or extend by an angle below the rated value - mechanism, type MKB-2, mounted on the fla transmission shaft (at frame No.33) and limit switches, type BK2-142 (front), mounted on the right-seat pilot engine control panel;

(b) in the event of throttle control retraction (aircraft landing) with t landing gear unextended - blocking contacts, type BK2-142 (rear), mounted on t right-seat pilot engine control panel and the landing gear extended position limit switches.

Specifications of C-1 Horns

1. Voltage range	20 to 30 V
2. Nominal voltage	26 V
3. Nominal duty of operation	intermittent (one-mi operation, one-minute interval)
4. Maximum current consumed at 26 V	0.85 A
5. Sound intensity at 26 V (as measured at a distance of 1 m. from the horn)	not less than 80 db
6. Frequency of contact opening at 26 V	200 to 310 c.p.s.
7. Horn weight	not in excess of 1.2

The cabin pressure warning unit is designed for closing the electric circ of the sound and light signal system warning the aircrew of the necessity of using oxygen apparatus.

The warning unit, type BC-46, is a unit of four aneroid boxes connected t the electric circuit moving contact. If pressure drops below the rated value, the boxes unit closes the circuit contacts and sends electric signals to the РИ-12 buzzer relay. The warning unit is adjusted for signal transmitting at altitudes from 1000 to 5000 m.

Specifications of BC-46 Cabin Pressure Warning Unit

1. The cabin pressure warning unit must continuously send out light and sound signals from the moment pressure decreases in the cabin to a value corresponding to the altitude set at the dial.	
2. Range of adjusting the unit for the beginning of the signal transmission according to pressure in the pressurized cabin corresponding to altitude in compliance with the international standard atmosphere	from 1000 to 5000 m.
3. Instrument temperature range	from +50 to -60°C
4. Instrument error during signal sending out at normal temperature at scale marks: 1; 2; 5; 3; 3.5; 4; 4.5; 5 km.	not in excess of ±150 m.
5. Unit must operate during vibration within the frequency range	from 20 to 80 c.p.s. and overload of 2.5 db.
6. Reliability of the electric contacts must ensure	up to 1000 switchings
7. Instrument weight	not in excess of 450 gr (with the plug connector)

Cabin pressure warning units are mounted in the front cabin at frame No.5 (starboard side) and in the rear cabin at frame No.75 (starboard side).

To obtain intermittent light and sound signals, connected to the circuit of each cabin pressure warning unit is a buzzer relay, type РИ-12 , with two capacitors, type КЭ-1А-50 $\frac{50}{\text{ohms}}$ - V . The relay and capacitors are installed in the boxes of the sound signal relays (Figs 81 and 82). The relay boxes are mounted in the front pressurized cabin on the navigator-radar operator left-hand rack and in the rear pressurized cabin on the starboard side at frame No. 73.

The relay is switched on by the operation of the cabin pressure warning unit contacts and ensures intermittent duty of operation.

Specifications of РИ-12 Relay

1. Nominal voltage	26.5 V
2. Frequency of relay operation at nominal voltage	3 to 5 switchings per second
3. The relay operates normally under the following conditions:	
(a) ambient air temperature	from +50 to -60°C
(b) ambient air relative humidity	up to 98 per cent
(c) sea-level altitude	up to 15000 m.
(d) aircraft vibration	
4. Operating voltage when operating under load (continuous operation)	not in excess of 14 V
5. Armature attraction voltage	not in excess of [illegible] V
6. Armature drop-out voltage	2 to 5 V
7. Relay weight	not in excess of 195 gr

[redacted]

50X1-HUM

Table 22

Light Signalling

Nos	Purpose	Number of lamps	Signal devices				Note
			Type of device	Conditions under which the device operates	Nature of operation	Location of device	
1	2	3	4	5	6	7	8
1	Signalling of the engine readiness for starting	2	САЦ-51, green	With the turbostarter exhaust gas shutters open	Constant glow of the lamps	On the engine starting panel on the left-seat pilot's engine control console	
2	Signalling of oil pressure in the turbostarter	1	САЦ-51, green	At oil pressure in the turbostarter exceeding 3.5 atm.	Constant burning of the lamps	On the turbostarter control panel	
3	Signalling of fuel consumption sequence	4	САЦ-51, blue	1st group lamp flashes up when the fuel consumption control switch is set to the AUTOMATIC (АВТОМАТИКА) position and the amplifiers switches turned on. The rest of the lamps flash up in sequence after 200 lit. of fuel is left in the previous tank group	Constant glow of the lamps	On the fuel supply panel	
4	Signalling of fuel available for 30- or 15-minute flight	4	САЦ-51, red	Two lamps flash up with fuel available for a 30-minute flight, the other two lamps flash up with fuel available for a 15-minute flight	Constant glow of the lamps on the left-seat pilot instrument panel	On the fuel supply board	
5	Signalling of fuel pumps operation	12	САЦ-51, green	With the pump operating and pressure in the system reaching 0.3 or 0.35 kg per sq.cm.	Constant glow of the lamps	On the fuel supply board	
6	Signalling of engine shut-off cocks open position	2	САЦ-51, green	With the engine shut-off cocks open from the beginning of engine starting to its stopping	Constant glow of the lamps	On the fuel supply board	
7	Fire signalling	6	Red	With the fire-fighting system switched on, when temperature in the area of the fire-sensitive units reaches 140 to 170°C or on pressing the button	Constant glow of the lamps	On the fuel supply board	
8	Signalling of the brake parachute release	2	САЦ-51, green	With the brake parachute released	Constant glow of the lamps	On the instrument panels of the right- and left-seat pilots	

[redacted]

50X1-HUM

1	2	3	4	5	6	7	8
9	Signalling of pressure drop in the normal and emergency hydraulic systems	2	СЛЦ-51, red	At pressure in the normal hydraulic system less than 100 kg per sq.cm. and in the emergency hydrulic system less than 130 kg per sq.cm.	Constant glow of the lamps	On the pilots' central electric board	
10	Signalling of the brake automatic unit operation	1	СЛЦ-51, blue	With abrupt braking of the wheels, with the brake automatic unit switch turned on	Blinking of the lamp	On the pilot's central electric board	
11	Signalling of the armament position during landing	2	СЛЦ-51, blue	With the armament barrels of the lower and rear sighting stations in the lowered position	Constant glow of the lamps	On the left-seat pilot instrument panel	
12	Signalling of the tail support and leading gear position	8	СЛЦ-51, five green and three red lamps	The three green lamps indicate the landing gear legs extended position, the three red lamps - the landing gear legs retracted position	Constant glow of the lamps	On the pilots' central electric board, on the gunner - radio operator's and gunner's electric board	
13	Signalling of the rudder and aileron trim tabs position	3	СЛЦ-51, white	With the rudder and aileron trim tabs in the neutral position	Constant glow of the lamps	On the left-seat pilot's instruments panel, in the aileron synchronization panel	

1	2	3	4	5	6	7	8
14	SPEED TWO HIGH (СКОРОСТЬ ВЕЛИКА) signalling	2	СЛЦ-51, red	With pressure head amounting to 2300 kg per sq.m. at low altitudes; at M=0.86 at high altitudes	Constant glow of the lamp	On the pilot's instrument panels	
15	Signalling of the stand-by gyro horizon switching	1	СЛЦ-51, red	With the stand-by gyro horizon switched on by the left-seat pilot or navigator-radar operator	Constant glow of the lamps	On the left-seat pilot's instrument panel	
16	Signalling of the camera hatch in the open position, camera tilting mount position during air survey and checking	3	СЛЦ-51, green, white, yellow	(a) The green lamp is on with the hatch open (b) The white lamp flashes, when the camera tilting mount passes the zero position, in SURVEY MODE OF OPERATION (РАЗВЕДКА) (c) The yellow lamp is on with the camera tilting mount operating in CHECK mode (КОНТРОЛЬ) at tilt angles of 0, 10, 15, 20 and 250°	Constant glow of the lamp Blinking of the lamp Constant glow of the lamp	On the navigator's right-hand console	
17	Signalling of the tail empennage de-icers operation	1	СЛЦ-51, white	On switching on the de-icer outer sections	Blinking of the lamp (40-sec. glow followed by 80-sec. interval)	On the right-seat pilot instrument panel	

[redacted]

1	2	3	4	5	6	7	8
18	Signalling of the fuel supply cocks open position and FUEL DELIVERED (ТОПЛИВО ПОДАНО) signal	5	СЛЦ-51, four green lamps, one yellow lamp	(a) The green lamps are on when the fuel supply cocks are switched on for opening (b) The yellow lamp is on when the FUEL DELIVERED (ТОПЛИВО ПОДАНО) warning unit is switched on	Constant glow of the four lamps Constant glow of the lamp	On the fuelling control board	
19	Signalling of pressure drop in the cabins	5	СЛЦ-51, yellow	When pressure drop corresponds to the altitude set at the dial within 1000 to 5000 m.	Blinking of the lamps	On the navigator's oxygen panel, on the left-seat pilot instrument panel, the navigator-radar operator's oxygen panel, the gunner-radio operator's instrument panel, the gunner's electric board	

Table 23

Sound Signalling

Nos	Purpose	Signal devices					Note
		Number of devices	Type of device	Conditions under which the device operates	Nature of operation	Location of devices	
1	2	3	4	5	6	7	8
1	Signalling of flap position during take off	1	Horn, type C-1, of the front pressurised cabin	With the flaps not extended to the take off angle, that is to a value from $19 + 1^{\circ}$ to $23 + 1^{\circ}$ and with both throttle controls set to the position corresponding to the aircraft take off	Constant buzzing of the horn	On the port side at frame No.9 of the front pressurised cabin	
2	Signalling of landing gear retracted position during landing	1	Horn, type C-1, of the front pressurised cabin	When at least one landing gear leg is not extended and at least one throttle control is set to low throttle (during landing)	Constant buzzing of the horn	On the port side at frame No.9 of the front pressurised cabin	
3	Signalling of pressure drop below the value rated for pressurised cabins	2	Horn, type C-1, of the front pressurised cabin Horn, type C-1, of the rear pressurised cabin	When air pressure in the pressurised cabin is below the value set at the dial of the cabin pressure warning unit, type BC-46	Intermittent buzzing of the horn	On the port side at frame No.9 of the front pressurised cabin. On the starboard side at frame No.71 of the rear pressurised cabin	

[redacted]

Care and Maintenance of Light and Sound Signal Units

The light, type СЩ-51 , horn, type C-1, cabin pressure warning units, type ВС-46, and the buzzer relay, type РД-12, do not require special care and maintenance. During service take care to see that these units are securely attached, and the contacts of the connected wires are in good condition and properly tightened.

Maintenance of the light signal fittings in the main consists in replacing burnt out lamps. To replace a lamp in the СЩ-51 fitting, it is necessary to unscrew the head with the light filter, fit a new lamp into the holder and screw up the head again. When soldering the wires to the fitting, observe polarity (the plus wire must be soldered to the fitting central contact). If polarity is incorrect, short circuit may take place during the replacement of the lamp under voltage.

In case the C-1 horn is being replaced or the supply conductors are being connected to the horn during installation of the horn cap, when the attachment screw is being tightened, ensure not only proper attachment of the cap but also normal sounding of the horn. The horn is adjusted by the Manufacturer. During service the horn does not require any additional adjustment.

As the signal fittings under voltage are checked only in conjunction with the operation check of the mechanisms included in the systems provided with the signal fittings, the data concerning the methods of adjusting the limit switches are given in the sections of the Instruction dealing with the operation of corresponding mechanisms, units and devices.

As a rule, various types of light signal devices are cut in when the corresponding units and mechanisms are switched on by means of cutout and change-over switches located on the instrument panels and electric boards.

Sound signal devices are switched on by means of switches, type В-45, mounted on the rheostat panel (Fig.83) of the right-seat pilot engine control panel and on the gunner-radio-operator's electric board (Fig.84).

AIRCRAFT INTERIOR LIGHTING

For aircraft interior lighting the following fittings are used:

(a) dome lights, type ПС-45 and ПСМ-51 ;
(b) light fitting, type КЛСРК-45;
(c) ultra-violet scale illumination lights, type АРУФОШ-45

In addition to this fitting extension lamps, type ПШ-10-36, are used to illuminate dark places on the aircraft.

Dome Lights, Types ПС-54 and ПСМ-51

The dome light, type ПС-45 , (Fig.85) without a special lens but with a reflector and a single-contact holder for the СМ-25 lamp of 28 V and 20 W is intended for illumination of the pressurized cabins and unpressurized fuselage compartments. The bulb of the СМ-25 lamp has a bowl of plate glass to protect the aircrew from the blinding effect of the lamp rays. Therefore, it is not recommended to use luminaires with other lamps (with open bulbs).

The inner surface of the dome light body which serves as a reflector is covered with white enamel or aluminium paint dispersing light. To ensure the proper operation of the luminaire, it is recommended to wipe the inner surface of the reflector with a clean moist piece of cloth or cotton wool.

In addition to the dome lights, type ПС-45 , for general illumination of landing gear compartments the aircraft is provided with small dome lights, type ПМ-51 , which are used by the aircrew or attending personnel during repair or maintenance operations in the landing gear compartments. The ПСМ-51 dome lights differ from the ПС-45 dome lights in that they are not provided with protection from the blinding effect of direct lamp rays as these dome lights are within the sight of the aircrew for a short time.

The main parts of the smaller ПСМ-51 dome light (Fig.86) are: body, protective transparent glass and reflector whose neck mounts a single-contact socket for the СМ-24 lamp of 28 V and 20 W. The second pole for the ПСМ-51 dome light as well as for the ПС-45 dome light is the dome light body and aircraft frame.

To replace the lamp in the ПСМ-51 dome light or the entire luminaire, first of all remove the protective glass. When mounting the protective glass, take care to see that the spring retaining the glass and the reflector is mounted correctly. The spring must pass between two lugs on the glass bowl. To retain the glass in position , bend the spring when it is weakened in the central part to ensure reliable attachment of the cap. For maximum glow keep the protective glass clean by wiping it regularly with a clean piece of cloth.

When using the ПС-45 and ПСМ-51 dome lights, check to see that the union nut of the nipple on the dome light inlet pipe union is tightened up at all times, as loosening of the nut may result in poor contact and flickering or dying out of the lamp.

The location of the dome lights, types ПС-45 and ПСМ-51, as well as the location of the switches designed for switching these dome lights on and off is indicated in Table 24.

Light Fitting, Type КЛРСК-45

For illumination of panels, boards, dark places and instruments the aircraft is provided with fittings, type КЛСРК-45, with a rheostat and a button, which have СМ-30 lamps of 28 V and nominal current of 0.17 A.

The aircraft has ten cabin lamps altogether (two of them are mounted at the navigator's seat, three lamps - at the pilot's seats, two - at the navigator-radar operator's seat, two - at the gunner-radio-operator's seat and one - at the gunner's seat).

Cabin lamps, type КЛРСК-45 , are mounted on special hinged brackets (Fig.87) which make it possible to use these lamps for directed illumination of several places. On some of the hinged brackets the cabin lamps are mounted together with ultra-violet illumination fittings. If necessary the КЛРСК-45 fitting can be removed from the hinged bracket or from its base and used as an extension lighting device for temporary illumination of some section in the cabin within the length of the cord.

The rheostat for adjusting the lamp light and the button by means of which the rheostat can be short circuited temporarily and the lamp caused to flush at full glow are located on the fitting case. By changing the distance between the lens and the lamp which is ensured by moving the cylindrical nozzle on the fitting it is possible to obtain more dissipated and more directed lighting.

The cabin lamp, type КЛРСК-45 , is switched on and off and its filament is adjusted by means of the rheostat handle made of colour plastic and mounted on the fitting body. Replace lamps in the КЛРСК-45 fitting in the following manner:

(1) turn out the stop screw fastening the cylindrical nozzle;
(2) remove the cylindrical nozzle;
(3) replace the lamp;
(4) mount the cylindrical nozzle and turn in the stop screw. When fitting the stop screw, see that a metal washer is placed under the screw head.

[redacted]

50X1-HUM

Table 24

Location of ПС-45 and ПСМ-51 Dome Lights and Their Switches on Aircraft

Nos	Type of dome light	Place of dome light installation	Place of switch installation	Note
1	2	3	4	5
1	ПС-45	On the ceiling of the front pressurised cabin between frames Nos 4 and 5	On the dome light mounting panel	For the navigator
2	ПС-45	On the ceiling of the front pressurised cabin at frame No.9	On the dome light mounting panel	For the pilots
3	ПС-45	On the ceiling of the fuselage unpressurised portion at frame No.14	On the navigator-radar operator electric panel	For lighting the hydraulic panel
4	ПС-45	On the ceiling of the fuselage unpressurised portion at frame No.20	On the starboard side on the bracket of the ПО-4500 inverter support	
5	ПС-45	On the ceiling of the fuselage unpressurised portion at frame No.34	On the navigator-radar operator's electric board	For lighting the bomb bay
6	ПС-45	On the ceiling of the fuselage unpressurised portion at frame No.38	On the navigator-radar operator's electric board	For lighting the bomb bay
7	ПС-45	On the ceiling of the fuselage unpressurised portion at frame No.42	On the navigator-radar operator's electric board	For lighting the bomb bay
8	ПС-45	On the ceiling of the fuselage unpressurised portion at frame No.46	On the navigator-radar operator's electric board	For lighting the bomb bay
9	ПС-45	On the ceiling of the fuselage unpressurised portion at frame No.49	On the navigator-radar operator's electric board	For lighting the bomb bay
10	ПС-45	On the ceiling of the fuselage un-	On the starboard side at frame	
11	ПС-45	On the starboard side of the fuselage unpressurised portion at frame No.66	On the starboard side at frame No.62	
12	ПС-45	On the ceiling of the rear pressurised cabin at frame No.71	On gunner-radio-operator's electric board	For the gunner-radio-operator
13	ПС-45	On the ceiling of the rear pressurised cabin at frame No.71	On the gunner's electric board	For the gunner
14	ПС-45	In the landing-gear port leg well		
15	ПС-45	In the landing gear starboard leg well		
16	ПС-45	In the nose leg well on the starboard side at frame No.20	On the navigator-radar operator's electric board	
17	ПС-45	In the landing gear nose leg well on the port side at frame No.20		

[redacted]

50X1-HUM

Extension Lamps, Type ПЛ-10-36

For additional lighting of dark places on the aircraft the latter is provided with extension lamps, type ПЛ-10-36, (Fig.88). The ПЛ-10-36 extension lamp has a 10-m. cord and a filament lamp, type СМ-15, of 26 V and 10 W. The extension lamps, type ПЛ-10-36, are switched on and off by means of the switch mounted on the handle of the lamp carbolite body.

The aircraft has three extension lamps altogether kept in special bags located in the following places: on the rear wall of the pilots' central console; on the wall of frame No.9 (starboard side) and in the rear pressurized cabin on the port side at frame No.73.

Extension lamps, type ПЛ-10-36, are connected to the aircraft mains by means of two-pin plugs. Receptacles, type 47К, for these lamps are mounted in various places of the aircraft. The aircraft has 13 receptacles, type 47К, altogether; four receptacles are mounted in the front pressurised cabin, four receptacles - in the fuselage unpressurized portion, two receptacles - in the engine nacelles compartments, two receptacles - in the landing gear main legs wells and one receptacle - in the rear pressurized cabin. The location of receptacles, type 47К, is described in Table 25.

Table 25

Location of Plug Connector Receptacles 47k for ПЛ-10-36 Portable Lamps

Nos	Place of receptacle installation	Note
1	2	3
1	On the navigator's right-hand console	
2	On the pilot's central console	
3	On the port side at frame No.5	For illuminator of the sight; it is switched on through a special rheostat from the set of this sight. The rheostat is mounted on the left-seat pilot's instrument panel
4	On the wall of the upper part of frame No.9	For illumination of the aircraft sextant
5	On the bracket of the ПО-4500 inverter rack (starboard side)	
6	On the fuel pumps starboard junction box at frame No.33	
7	On the junction box of the extension lamp mounted on the distribution board of the port engine nacelle	
8	On the junction box of the extension lamp mounted on the distribution board of the starboard engine nacelle	
9	On the junction box of the extension lamp mounted on the port side at frame No.5 of the landing gear starboard leg well	
10	On the junction box of the extension lamp mounted on the starboard side at frame No.5 of the landing gear port leg well	
11	On the fuel pumps junction box at frame No.49 (starboard side)	
12	On the starboard side at frame No.62	
13	On the port side of the rear pressurised cabin at frame No.72	

КИ-12 Compass Illumination

For illumination of two compasses, type КИ-12 , mounted at the navigator's seat in the upper part of frame No.1 and at the pilots' seats on the cabin canopy frame, special lamps are provided. The lamps are mounted right into the body of these compasses. Each compass illumination lamp is switched on by means of the switch, type В-45. The navigator's compass illumination switch is mounted on the navigator's upper electric board, while the pilots' compass illumination switch is on the pilots' central electric board. Both lamps are supplied by the triple-duty supply busbar through the automatic circuit breaker, type АЗС-5, mounted on the right-seat pilot circuit breaker panel, that is the КИ-12 compass illumination is ensured when the aircraft mains operates in all duties.

The triple-duty supply busbar supplies through the same АЗС-5 circuit breaker one of the receptacles, type 47К, mounted on the pilots' central panel.

The rest of the circuits of the light fitting are supplied from the normal supply busbars and are protected by the automatic circuit breakers mounted on panels and boards of the front and rear pressurized cabins The extension lamps receptacles mounted outside the pressurised cabins and dome lamps are protected by glass fuses.

Luminaire, Type АРУФОШ-45

The cabin luminaire, type АРУФОШ-45 , is designed for ultra-violet illumination of the instruments and the control units (electric boards and instrument panels) to cause luminescence of the luminous compounds as well as for lighting purposes. Ultra-violet illumination is performed by means of special aircraft luminescent mercury lamps of low pressure with rated power of 4 W, type УФО-4А.

The luminaire, type АРУФОШ-45 , is used in conjunction with the РУФО-45 rheostat designed to switch on the ultra-violet illumination lamp and to control its light intensity. The АРУФОШ-45 fitting is provided with special twin-conductor in a common copper braiding which serves as a third conductor.One of the ends of the twin-conductor has white insulation, the other end has white insulation with a black thread. The conductor having white insulation with a black thread is excluded from the lamp connection circuit and is insulated. The braiding of the fitting cord is connected to the aircraft framework either directly or through the aircraft conductor, type БПВЛ, connected to this braiding.

The lamp plastic body has a cylindrical nozzle with two light filters of black uviol and a hinged base for the luminaire. The upper light filter may turn

[redacted]
50X1-HUM

together with the nozzle ring within 90°. By rotating the nozzle ring it is possible to:

(a) match the slots of the both light filters; in this case white light of the lamp passes through these slots;

(b) overlap the slots; in this case only ultra-violet rays pass through the uviol light filters. The ultra-violet rays cause luminescence of luminous compounds.

Most of the luminaires, type АРУФОШ-45 , are mounted on special hinged brackets (See Fig.87) which make it possible to use this lamp for directed illumination of several places. On some of the hinged brackets the luminaires are mounted together with the КЛСРК-45 fitting. If necessary, the fitting may be removed from the hinged bracket or from its base used as an extension luminaire for temporary lighting of some area in the cabin as far as the cord permits.

The aircraft is provided with АРУФОШ-45 fittings with rheostats, type РУФО-45 . Three АРУФОШ-45 fittings are mounted in the rear pressurised cabin, the rest of them are installed in the front pressurized cabin.

The arrangement of the ultra-violet illumination devices and РУФО-45 rheostats is shown in Table 26.

Table 26

Arrangement of АРУФОШ-45 Luminaires and РУФО-45 Rheostats

Nos	Place of luminaire installation	Place of rheostat installation	Note
1	2	3	4
1	On the starboard side of the front pressurized cabin on frame No.2	On the navigator's upper electric board	For lighting the sight, the instrument panel and the navigator's right-hand console
2	On the ceiling of the front cabin on frame No.3	Same	
3	On the ceiling of the front cabin at frame No.4	Same	
4	On the right-seat pilot's steering wheel	On the right-seat pilot's engine control panel	For lighting the pilots' instrument panel
5	Same	Same	
6	On the left-seat pilot's steering wheel	On the left-seat pilot's engine control panel	
7	Same	Same	
8	On the port side at frame No.8	Same	Together with the КЛСРК-45 fitting it serves to light up the pilot's instrument panel

1	2	3	4
9	On the ceiling of the front cabin on frame No.8	On the left-seat pilot's engine control panel	Together with the КЛСРК-45 fitting it serves to light the pilots' upper electric board and the fuel supply panel
10	On the starboard side at frame No.8	On the right-seat pilot's engine control panel	Together with the КЛСРК-45 fitting it serves to light the right-seat pilot's panel
11	On the fuel supply panel	On the right-seat pilot's engine control panel	To light the pilot's central panel
12	On the left-hand side of the upper blister	On the navigator-radar operator's instrument panel	Together with the КЛСРК-45 fitting it serves to light the instrument panel and the navigator-radar operator central panel
13	On the right-hand side of the navigator-radar operator's central panel	Same	Same
14	On the port side of the rear pressurized cabin at frame No. 74	On the gunner's electric board	For lighting the instrument panel, board and the gunner's panel
15	On the starboard side of the rear cabin at frame No.70	On the gunner-radio-operator's electric board	Same
16	On the rear cabin circuit breaker panel on the port side at frame No.71	Same	Same

Basic Specifications of the УФО Set

1. Total resistance of the РУФО-45	35 ohms
2. Rheostat resistance in the cutoff position	22 ohms
3. Normal current of lamp operating duty	0.35 A
4. Lamp resistance with the rheostat cut off	0.5 to 0.6 A
5. Luminous compound brightness adjustment range of the РУФО-45 rheostat	from 150 to 30%

[redacted]

50X1-HUM

100% is as
to be the brig
ness of lumin
compound illu
nated by a la
operating und
nominal cond-
tions (at 0.3

6. УФО-4А lemp flashes up .... in no more tha
12 seconds afte
switching

7. Lamps which were on for not less than 10 min. at
nominal current of 0.35 A flash up again on switching ..... in no less tha
2 minutes fro
the moment of
switching

Switching On УФО Lamp

The УФО lamp is switched on by means of the rheostat, type РУФО-45. In the idle position the rheostat handle must be set to the OFF (ВЫКЛЮЧЕНО) position at all times. The УФО-4А lamp is switched on automatically in no more than 12 sec. after the rheostat is set to the ON (ВКЛЮЧЕНО) position; it is n necessary to set the РУФО-45 rheostat handle to the right as far as it will g

On switching on the lamp, adjust as required the brightness of the scales and stencils covered by luminous compound or the degree of illuminance during t operation with the light filter open. The rheostat handle being turned to the left, the brightness decreases, the handle being turned to the right, the brightness increases.

Replacement of Lamp in АРУФОШ-45 Fitting

1. Remove the cylindrical nozzle with the light filters. To detach the cylinder from the body, press with the finger the lower part of a special plat riveted to the cylinder. This done, turn the fitting cylinder counter-clockwis and remove it from the body.

2. Replace the lamp. When fitting a new lamp, type УФО-4А, bear in mind that the lamp has a bayonet base with pins (type 2c-15A-1); the base pins are located at various height due to which the lamp can be inserted into the socket only in one definite position ensuring correct polarity of switching.

3. Fit the cylindrical nozzle with the light filters. When fitting it on the body turn the cylinder clockwise until the elastic pin clicks in the hole.

EXTERIOR LIGHTING

The aircraft exterior lighting consists of the following light fittings:

(a) taxiing lights, type ФР-100;
(b) landing lights, type ЛФСВ-45;
(c) formation lights, type ПССО-45;
(d) navigation lights, type БАНО-45, and ХС-39.

Taxiing Lights, Type ФР-100

The aircraft taxiing lights, type ФР-100, are designed for illumination of the ground during taxiing in the night time. For the landing gear nose leg the landing light is mounted right on the landing gear strut while for the landing gear main legs the landing lights are mounted on the struts.

The taxiing light, type ФР-100, (Fig.89) consists of a case with a reflector and a single-contact socket for the СМ-21 lamp of 27 V and 2.7 A. The landing lamp protective glass which is a colourless transparent disperser ensures angle of dispersion in the horizontal plane equal to 30°. The maximum luminous intensity of the taxiing light is 5000 candles.

With the aid of the adjustable bracket each taxiing light can be set to the position which ensures illumination of part of the landing strip at a distance of 15 or 20 m. from the pilots' cabin in the direction of flight. The taxiing light is fixed in the required position by means of a nut and a lock nut.

All the three taxiing lights are switched on simultaneously with one switch, type В-45, mounted on the pilots' upper electric board (Fig.90).

Landing Lights, Type ЛФСВ-45

To illuminate the place of aircraft landing in the night time, the aircraft is provided with two retractable landing lights, type ЛФСВ-45, installed in the lower part of the nose unpressurized section of the fuselage at frame No.13. The retractable part of the landing light consists of a casing and a special reflector lamp, type СМФ-2М, of 28 V and 600 W. The СМФ-2М lamp consists of a filament lamp proper, a reflector and a protective glass.

The landing light control electric mechanism, type МПФ-2 consists of a reversible electric motor of series excitation, a reducer and a cutting off contact device.

The landing light is supplied from a single-line mains; the second pole for the light and for the electric drive is the landing light body and the aircraft frame. The light is switched on automatically when the landing light is extended. Switching off is performed automatically too when the landing light is retracted.

The landing lights are controlled by means of a switch, type 2ПП-45, from the pilots' upper electric board (Fig.91).

Specifications of Landing Light, Type ЛФСВ-45

1. Maximum luminous intensity .... not less than 350,000 candles
2. Landing light angle of dispersing:
   in the horizontal plane .... not less than 12°
   in the vertical plane .... not less than 8°
3. Landing light extension angle .... 86°30' ± 30'
4. Time required for extension or retraction of the landing light .... not in excess of 12 sec.
5. Permissible continuous glow of the landing light .... not in excess of 5 min.
6. СМФ-2М lamp service life guaranteed by the Manufacturer .... 5 hours of burning
7. Operating voltage range for the МПФ-2 electric mechanism .... 24 to 30 V

[redacted]

50X1-HUM

8. Current consumed by the electric mechanism	2.8 A
9. Maximum moment	220 kg-cm
10. Duty of the electric mechanism operation	intermittent
11. Weight of the landing light with the electric mechanism ...	3.5 kg

The landing lamps, type ЛФСВ-45, installed on the aircraft in the extended position ensure illumination of part of the landing strip at a distance of 40 to 60 m. from the pilots' cabin in the direction of flight.

Maintenance of Landing Lights, Type ЛФСВ-45

To check the operation of the landing lamps on the ground, it is permitted to switch them on for not more than 5 minutes. The landing light may be switched on again only after they have been cooled during not less than 5 minutes.

Avoid shaking and knocking to prevent crack formation and failure of the landing lights.

When checking the landing light in a workshop the supply voltage must not exceed the nominal value of 28 V, otherwise the lamps may burn out.

To prevent decrease in the landing light luminous intensity, clean the part of the lamp surface which serves as a protective glass.

Replacement of СМФ-2М Lamp

The СМФ-2М lamp is a changeable element of the landing light and is replaced by the unit technician in the event of failure. To replace the lamp in the ЛФСВ-45 landing light, do as follows:

1. By means of the 2ПП-45 switch extend the landing light with the burnt out lamp; at this the circuit breakers, types АЗС-5 and АЗС-30, mounted on the left-seat pilot circuit breaker panel for the serviceable landing light must be switched off.
2. Switch off the supply circuit breaker, type АЗС-30, of the unserviceable landing light on the left-seat pilot circuit breaker panel.
3. Unscrew four screws 3 (Fig.91).
4. Remove retaining ring 4 and draw the lamp out of the streamlined case.
5. Disconnect the supply conductors from the lamp terminals and remove the lamp.
6. Installation of a new lamp is performed in the reverse order.

When replacing the lamp, see that the rubber shock absorbers supporting the lamp bowl in the case are intact.

Re-Adjustment of Turning Units of the МПФ-2 Electric Mechanism Sector

The МПФ-2 electric mechanism is adjusted for a turning angle of the sector (landing light) equalling 76° ± 30' For the aircraft, model ТУ-16 , the landing light extension angle of 86°30' ± 30' is necessary. Therefore, when replacing the ЛФСВ-45 landing light during service, bear in mind that it is impossible to mount a new light on the aircraft without preliminary re-adjustment of the sector turning angle of the МПФ-2 electric mechanism.

Re-adjustment of the electric mechanism is performed in the following manner:

1. Remove the seal and the check wire, turn out the screws fastening the cover to body 2 and turn the cover aside according to Fig.92.
2. Loosen screw 3 and by moving limit switch 4 together with plate 5 along the guide grooves see that the contacts of limit switch 4 are opened by stop 6 at an angle of the sector (landing light) turning equal to 86°30' ± 30'.

3. Tighten up screw 3 again.
4. Check the operation of the electric mechanism.
5. Place cover 1 in position, turn in the screws fastening the cover to the body and seal the electric mechanism again.
6. Make corresponding entries in the Certificate of the МПФ-2 electric mechanism.

The re-adjustment of the electric mechanism should be made by trained personnel, no damage to the inner connecting conductors, limit switches and other elements of the electric mechanism is permitted.

Installation of ЛФСВ-45 Landing Light on Aircraft

Install the landing light on the aircraft so that the body of the landing light electric mechanism is pointed in the direction of flight while the dimmer located inside the lamp and designed for screening the direct rays looks with its prominent portion towards the aircraft centre line.

The landing light is fastened in position with 15 screws 4 mm in diameter passing through the holes in the landing light flange.

Formation Lights, Type ПССО-45

Formation lights, type ПССО-45 , are used during group flights in the night time or under conditions of poor visibility to allow the aircraft flying in the rear to form up and to keep their proper places in formation.

When forming up above the leading aircraft, the upper formation lights are used; when forming up below the leading aircraft, the lower formation lights are used. The upper and the lower formation lights are installed over the axis along the fuselage and over the wing span on the landing gear fairings so that during the flight the illuminated aircraft resembles the letter T. The formation light attachment is made flush with the skin by means of bolts and self-locking anchor nuts. The upper and lower formation lights are switched on by means of corresponding switches, type В-45, mounted on the pilots' upper electric board (See Fig.91).

The ПССО-45 formation light (Fig.92) consists of the following main parts: aluminium body, the inner electrically polished surface of which serves as a reflector of the socket holder with a single-contact socket mounted in it for the СМ-30 lamp of 28 V and 0.17 A, and a prismatic light refractor of blue polystyrene serving as a light filter at the same time.

Specifications of ПССО-45 Formation Lights

1. Maximum luminous intensity	not less than 5.5 colour candles, with the formation light in the horizontal position; it is directed backward at an angle of 45 to 90° up from the direction opposite to the direction of flight
2. Lights visibility range in the direction of maximum luminous intensity in the night time in clear weather	about 3 km.

[redacted]

50X1-HUM

3. Angular width of luminous beam .... about 20°

This arrangement of formation lights enables the aircraft flying behin somewhat higher to keep its place in the formation taking bearing on the brigh est of the leading aircraft.

Maintenance of Aircraft Formation Lights, Type БССО-45

To avoid decrease in the formation lights luminous intensity, clean th reflector and light refractor from dirt with a clean piece of soft cloth o cotton wool. It is prohibited to wipe the aluminium reflector or plastic refractor with coarse material.

CAUTION: The БССО-45 formation lights are designed for operation only during flights. To prevent the plastic light refractor from overheatin and damage, switching on the lights for a long time during parking is not permitted.

Polystyrene of which the light refractor is manufactured swells and diss ves almost in all solvents - acetone, ethyl-acetate, ether, chloroform, benzol, benzine (containing benzol), toluene.

The vapours of these solvents also produce a harmful effect on plastics: the solvents are absorbed by polystyrene and then slowly evaporate causing th appearance of irregular dimming in the light filter and the formation of small cracks near the surface.

If such a light filter is held up against the light, some silvery brillia may be noticed in the plastics.

These phenomena considerably reduce the coefficient of the light filter total passing capacity, its transparency and, therefore, change the light distribution of the БССО-45 formation lights. Therefore, to avoid harmful influen of solvent vapours upon the plastics do not paint and dry the bomb bay doors wi the light refractors of the БССО-45 formation lights mounted on them. If th formation lights are already mounted, prior to painting remove the light refractors and tightly close the reflectors with some plug. To protect polystyr refractors, take care to see that they are not splashed with solvents.

Replacement of БССО-45 Fitting and Replacement of Lamp in the Fitting

To remove the БССО-45 fitting, turn out the fitting attachment screws an disconnect the plus conductor.

When mounting a new formation light, see that the installation is precis the plane passing through the lamp axis perpendicularly to the refractor prism must be parallel to the aircraft longitudinal axis and the socket holder must face downward (upward for the lower lights) and forward with flight. The formation lights are fastened in position with five screws 3 mm in diameter (passing simultaneously through the holes and anchor nuts in the aircraft frame) in th body of dome lamp 1 (See Fig.93), rubber gasket 3, light refractor 4 and retaining ring 5 holding the refractor in place. Thus, the formation light is assembled simultaneously with its installation on the aircraft. The asymmetrical location of attachment holes in the formation light excludes incorrect position of the blue light refractor in relation to the reflector, nevertheless, see that the refractor prisms look inside the formation light. If the locating diameter of the БССО-45 formation light dome lamp does not correspond to the cut in the aircraft frame recess, it is permitted to fit washers measuring

lead under the dome lamp attachment bolts and the recess bottom. In this case the dome lamp may project in relation to the skin outer surface by up to 1 mm.

The dome lamp installed, fill the clearance between ring 5 and the aircraft skin with packing sealing thiokol putty.

To replace the lamp in the БССО-45 fitting, do as follows:

1. Turn out the attachment screws of the formation light fitting, remove the retaining ring and the light refractor.
2. Replace the lamp.
3. Mount the light refractor and the retaining ring in place, screw in and tighten up the attachment screws.

Navigation Lights, Type БАНО-45

The navigation lights, type БАНО-45, are designed to be shown by aircraft in the air during flight and on the ground during taxiing.

The fairing of each wing mount front and rear navigation lights. Two red lights, type БАНО-45 , are located on the port wing-tip fairing, two green lights are located on the starboard wing-tip fairing. The navigation lights are installed in recesses closed with plexiglass and are fastened in position with three bolts, 3 mm in diameter. The fitting is provided with lamps, type CM-22, of 28 V, 24 W with luminous intensity of 21 candles.

The navigation light, type БАНО-45, has asymmetrical light distribution. The maximum luminous intensity in the direction of flight is not less than 33 colour candles which ensures the visibility range in the night time of about 5 km under normal conditions. In the horizontal plane light is emitted within 110° outside from the direction of flight; in the vertical plane - within ±90° up and down from the horizon.

Replacement of Lamp in БАНО-45 Fitting

1. Turn out the plexiglass fairing attachment screws and remove the fairing.
2. Turn out screw 7 fastening the light filter (Fig.94) and remove the glass.
3. Unscrew the lamp and replace it.

When replacing the lamp, take into consideration that the pins of the lamp base are located at various heights; this makes it possible to insert the lamp into the socket only in the definite position: the amalgamated surface of the bulb must face screw 7.

4. Mount the glass light filter and fasten it in position with screw 7.

When mounting the light filter, it is recommended that the glass end face should be slightly covered with sealing thiokol putty to prevent moisture from getting inside the device. During the assembly take care to see that packing gasket 2 is fitted under the glass and lead washer 6 is fitted under the head of attachment screw 7, otherwise the glass might break when the screw is being tightened. After the light filter has been installed, it is recommended to cover the head of screw 7 with putty or paint.

5. Mount the plexiglass fairing and fix it with screws.

Removal of БАНО-45 Fitting

1. Remove the plexiglass fairing.
2. Turn out the light filter attachment screw and remove the glass.
3. Turn out the three fitting attchment screws.
4. Unscrew socket union nut 4 and disconnect the supply conductor.
5. Remove the БАНО-45 fitting.

Installation of the navigation light is performed in the reverse order.

[redacted]

50X1-HUM

Tail Light, Type XC-39

In the fuselage tail section the rear fairing lower part mounts a tail navigation light, type XC-39, with the CM-15 lamp of 26 V, 10 W. The tail light is switched on by means of the same switch, type B-45, which is designed for switching on wing-tip navigation lights, type БАНО-45 . The switch is mounted on the pilots' upper electric board (See Fig.90).

Replacement of Lamp in the XC-39 Fitting

1. Unscrew the attchment screws of the wire lattice and remove the latter.
2. Loosen the glass shade attachment screws 7 (Fig.95) and remove the sha
3. Replace the lamp.
4. Mount the glass shade in position and tighten up the screws.
5. Fit the wire lattice.

Removal of XC-39 Fitting

1. Remove the wire lattice.
2. Remove tail light fitting attacment screws 7 and remove the fitting fr the recess in the fairing bracket.
3. Disconnect the supply conductors.

Installation of the tail light fitting is performed in the reverse order.

FIRE FIGHTING EQUIPMENT AND FIRE WARNING ELECTRIC SYSTEM

With the aid of the electric system:

(1) CO_2 is delivered to the area where fire occurs in the aircraft;

(2) fuel delivery to the engines is cut off;

(3) the fuel system is being filled with neutral gas.

The aircraft electric system includes the following units:

- fire-sensitive unit ТИ - 28 pieces;
- electromagnetic shut-off cocks unit (unit 635900) - 2 pieces;
- push-button type lamp with a red light filter - 6 pieces;
- electromagnetic air valve 2512800 - 2 pieces;
- relay, type PII-2 - 1 piece;
- warning lamp with a greeen light filter - 2 pieces;
- fuel cross-feed cock with the M3K-2 electric mechanism - 1 piece;
- firing mechanism - 10 pieces (four of them are intended for CO_2 cylind and six - for neutral gas cylinders);
- CO_2 cylinder switch button 5K - 1 piece;
- fuel shut-off cock with the M3K-2 electric mechanism - 2 pieces.

The units of the system are located in the following places:

1. Fire-sensitive units on special brackets:

(a) in the area of the fuselage nose section fuel tanks: two-fire-sensitiv units are located on frame No.17, one unit is located on frame No.22, one unit is located on frame No.25 and four units are located on frame No.33;

(b) in the area of the fuselage tail section fuel tanks: two units are located on frame No.50 and two - on frame No.56;

(c) on the engines under the collapsible cowls: four fire-sensitive units are located on each engine;

(d) in the area of fuel tanks between ribs Nos 3 - 4, 6 - 7, 8 - 9 and 12 - 13 along the rear wall of the wing second longeron - four fire-sensitive units are located in between each pair of the ribs.

2. The electromagnetic fuel shut-off cocks units are located on the ceiling of the bomb bay between frames Nos 37 and 38.

3. CO_2 cylinders switching and warning push-button type lamps (Fig.112) are mounted on the pilots' upper electric board.

4. The electromagnetic air valve 2512800 is mounted on the engine.

5. The relay, type PII-2 , and the warning lamps with green light filters are located on the pilots' upper electric board.

6. The fuel cross-feed cock with the M3K-2 electric mechanism is located on frame No.33.

7. The firing mechanism designed for opening the CO_2 cylinders is installed on frame No.22, that designed for opening the neutral gas cylinders is mounted on frame No.15.

8. The 5K button for switching on the CO_2 cylinders is located on the pilots' upper electric board.

9. The starboard and port engines fuel shut-off fire cocks are installed on the engines behind the fire wall.

Specifications of Electric Units Included in System

1. Fire-sensitive unit ТИ (Fig.113):	
operation range	140 to 170°C
insulance	not less than 2 megohms
2. Fuel shut-off cocks unit:	
operating pressure	up to 100 kg/cm^2
nominal voltage	27 V
current on switching	not in excess of 7 A
current with cocks open	0.5 A
time unit is energized	not in excess of 20 min.
minimum pulling effort at the beginning of travel with 6.5 mm clearance, at nominal voltage and time unit is energized not exceeding 15 sec.	9 kg

The Specifications of the M3K-2 mechanism are given in the Section "Fuel Pumps Control and Fuel Quantity Measuring Electric System".

Checking Installation and Operation of Fire-Fighting Equipment Electric System

Carry out the outside inspection with the aircraft mains de-energized. During the inspection make sure that:

1. The fire-sensitive units attachment is in proper condition, the diaphragms are free from dents and are not deformed, there are no foreign matter and no moisture between the body and the fire-sensitive unit diaphragm.

2. The glass of the push-button type lamp is not broken and is securely fixed in position.

3. The CO_2 cylinder button, type 5K, operates without jamming and is in good repair.

4. The firing mechanisms on the discharge bonnets of the CO_2 and neutral gas cylinders are screwed up and locked with the ПП-3 explosive charges inserted (Fig.98).

[redacted]

50X1-HUM

CAUTION: During service it is prohibited to touch the fire-sensitive unit contact screw with the nut, to re-adjust the contact screw and press the diaphragm.

5. The plug connectors of the fuel shut-off cocks units must be connected in compliance with the marking (the plug connector bodies and the fuel shut-off cocks units are marked) and locked with wire.

Checking Operation of Energized System

CAUTION: The neutral gas switch, type B-45, is turned on only when neutral gas is delivered to the system.

Neutral Gas HT

The system is checked by connecting an extension pilot lamp to the firing mechanisms. For this:

1. Unscrew all the six firing mechanisms from the neutral gas cylinder discharge bonnets and remove the explosive charged.

2. Switch on the neutral gas circuit breaker on the right-seat pilot circuit breaker panel and turn on the B-45 switch on the pilots' upper electric panel. In this case the extension pilot lamp whose one conductor is connected to the body and the other conductor is connected to the mid contact of the firing mechanism must be on.

3. The check up over, turn off the neutral gas switch, type B-45, on the pilots' upper electric board.

4. Charge the firing mechanisms with explosive charges, screw them to the neutral gas cylinder discharge bonnets and lock the firing mechanism nuts with wire.

Fire-Fighting System

1. On the right-seat pilot circuit breaker panel switch on two starboard and port engines tanks fire warning circuit breakers, type A3C-15.

CAUTION: The CO_2 cylinder opening circuit breaker, type A3C-10, must be in the OFF (ВЫКЛЮЧЕНО) position.

2. On the pilots' upper electric board turn on the fire-fighting system switch; the lamp must be dead.

3. Press in turn all the push-button type lamps mounted on the pilots' upper electric board. Each push-button type lamp must flash up and the cock of the fuel shut-off cocks unit corresponding to this lamp must operate. Simultaneously the CO_2 cylinder opening relay, type PП-2, must operate. Prior to each pressing of the push-button type lamp, turn off the fire-fighting system switch and in 1 or 2 seconds turn it on again; the push-button type lamps must go out. On pressing the push-button type lamp of the starboard and port engine besides flashing of the push-button type lamp and operation of the PП-2 relay, the electromagnetic air valve of the shutter in the system designed for scavenging the space under the engine cowl with air must operate.

4. On the left-seat pilot circuit breaker panel switch on the air control circuit breaker and press one of the push-button type lamps. On throttling down one of the engines the blow-off band must operate for closing and the shutter of the undercowl recess air scavenging system must get closed.

Fuel Shut-Off and Engine Fuel Cross-Feed Cocks

1. On the right-seat pilot circuit breaker panel switch on two fuel shut-off cock circuit breakers, type A3C-5, two fuel pump operation warning system circuit breakers, type A3C-2 , and the fuel cross-feed cock circuit breaker, type A3C-5.

2. On the pilots' upper electric board set the fire shut-off cock switches and the fuel cross-feed control switch to the OPEN (OTKPЫTO) position; in this case the fuel shut-off cocks green warning lamps (OPEN) on the pilots' upper electric panel must flash up. With the cock switches in the CLOSED (ЗAKPЫTO) position the warning lamps must go out.

The system operation should be checked during the engine operation by the aircraft technician or mechanic, who opens the fuel shut-off cocks prior to engines starting and closes them after switching them off.

Possible Faults of Fire-Fighting System and Their Elimination

Fault	Cause	Remedy
1	2	3
One of the push-button type lamps is on when there is no fire	(a) Closing of contacts in the fire-sensitive unit	Check the entire group of the push-button type lamp fire-sensitive unit. On detecting a fault inside the fire-sensitive unit replace the latter
	(b) Closing of contacts inside the push-button type lamp	Replace the push-button type lamp
The push-button type lamp continues glowing after pressing the lamp when turning the fire-fighting system switch on and off	The change-over system in the fuel shut-off cocks unit is out of repair	Replace the fuel shut-off cocks units. **Note**: The defects eliminated, check the firing mechanisms and if they have operated, replace the explosive charges
The warning lamp is dead with the fuel shut-off cocks open	(a) The lamp is burnt out	Replace the burnt out lamp
	(b) The adjustment of the limit switches in the M3K-2 electric mechanism is disturbed	Replace the fuel shut-off cock
	(c) The pump operation warning system circuit breaker, type A3C-2 , is not switched on on the right-seat pilot circuit breaker panel	Switch on the circuit breaker. **Note**: To determine the fault of the fuel shut-off cocks warning system,

[redacted]

1	2	3
		disconnect the plug connector from the МЗК-2 electric mechanism and connect terminal 4 to the aircraft frame by means of a conductor; if the warning lamp is serviceable and the wiring is in good repair, the warning lamp must be on
The fuel shut-off cocks or the cross-feed cock fail to open or to close	(a) The fuel shut-off cocks circuit breaker, type АЗС-5 , or the cross-feed cock circuit breaker, type АЗС-5 , on the right-seat pilot circuit breaker panel is OFF	Switch on the circuit breaker
	(b) The connecting wires are broken, or there is no contact in the plug connector	Detect the places of damaged wiring by ringing out the wires and eliminate the damage. This done, check the operation
	(c) The electric mechanism, type МЗК-2 , is out of repair	Replace the МЗК-2 electric mechanism with the cock
The fuel shut-off cocks or the cross-feed cock let the fuel through in the closed position	The adjustment of the limit switches of the МЗК-2 electric mechanism is disturbed	Replace the МЗК-2 electric mechanism with the cock

FUEL PUMPS CONTROL AND FUEL GAUGE ELECTRIC SYSTEM

The system is designed for:

(a) checking the total quantity of fuel in five tank groups;

(b) checking the quantity of fuel in each group of tanks separately;

(c) automatic control of the fuel consumption sequence so as to preserve the aircraft centring within permissible limits during flight and landing;

(d) manual control of the fuel pumps when the automatic control of fuel consumption fails;

(e) warning of fuel available for 30-minute and 15-minute flight;

(f) aircraft fuel filling control;

(g) measuring the amount of fuel consumed by each engine;

(h) signalling of the fuel pumps operation of each group of tanks separately.

The system includes the following instruments and units:

1. Capacitive fuel level gauge, type СЭТС-60М.

The fuel level gauge set includes:

indicators	2 pieces.
measuring device amplifiers, type ЛТ-88М	2 pieces
automatic units, type БАС-52-12	2 pieces
switches, type ПТ-7	2 pieces
main transmitters (with signalling)	10 pieces
additional transmitters (with signalling)	5 pieces
additional transmitters (without signalling)	2 pieces

2. Summing fuelmeter, type РТО-16 (two sets). The fuelmeter set includes:

transmitter	1 piece
indicator	1 piece
thyratron interrupter, type ПТ-51Т	1 piece

3. Fuel pump, type ЭЦН-Т , with the МВ-650А electric motor	12 pieces
4. Contactor, type К-50	12 pieces
5. Relay, type РП-2	10 pieces
6. Relay, type РП-6	1 piece
7. Warning lamps, type СЛЦ-51 :	
with a red light filter	4 pieces
with a blue light filter	4 pieces
with a green light filter	12 pieces
8. Fuel-pressure warning unit, type СД-3 ТУ	12 pieces
9. Resistor, type ПО-10-5	8 pieces

Arrangement of Electric Units Included in the System

1. The fuel pumps operation warning lamps and control switches are located on the fuel supply electric board (Fig.99).

2. The arrangement of fuel pumps, fuses, switching contactors, ПО-10-5 resistors and РП-3 relay designed for changing the fuel pumps over to the forced conditions is indicated in Table 27.

3. The fuel gauge amplifiers (Fig.100) are located on the navigator-radar operator's rack on the starboard side.

4. The automatic units (Fig.101) are mounted in the landing gear nose leg well on frame No.22.

5. The 30- and 15-minute flight fuel remain warning lamps are located on the left-seat pilot instrument panel and on the fuel supply panel.

6. The location of the fuel level gauge transmitters is shown in Table 28.

7. The fuel-level gauge switches and indicators are installed on the right-seat pilot instrument panel (Fig.102).

8. The fuel gauge A.C. supply fuses, type СП-1 , are mounted on the navigator's upper electric board.

[redacted]

50X1-HUM

Table 27

Arrangement of Fuel Pumps and Units and Their Switching by Groups

Name of tank group	Place of installation				
	Fuel pumps in the tank	Pump supply fuse	Pump switching contactor	ПО-10-5 resistor	Pump РП-2 function relay
1	2	3	4	5	6
left	No.2 - 2 pieces	ИП-75 fuse in the additional pump junction box of tank No.2 (on frame No.35)	К-50Д contactor in the additional pump junction box of tank No.2	In the additional pump junction box of tank No.2	In the additional pump junction box of tank No.2
1st group		ИП-75 fuse in the fuel pumps left junction box (on frame No.33)	К-50Д contactor in the fuel pumps left junction box	In the fuel pumps left junction box	In the fuel pumps left junction box
right	No.5 - 2 pieces	Two ИП-75 fuses in the fuel pumps junction box (on frame No.49)	Two К-50Д contactors in the fuel pumps junction box	Two resistors in the fuel pumps junction box	Two resistors in the fuel pumps junction box
left	No.4 - 1 piece	ИП-75 fuse in the fuel pumps junction box (on frame No.49)	К-50Д contactor in the fuel pumps junction box	In the fuel pumps junction box	In the fuel pumps junction box
2nd group right	No.3 - 1 piece	ИП-75 fuse in the fuel pumps starboard junction box (on frame No.33)	К-50Д contactor in the fuel pumps right junction box	In the fuel pumps right junction box	In the fuel pumps right junction box
3rd group	No.10 - 1 piece	ИП-50 fuse in the distribution panel of the port and starboard engines	One К-50Д contactor in the landing gear junction box and one contactor in the fuel pumps relay junction box (in the port and starboard landing gear wells)	In the landing gear junction box and the fuel pumps relay	In the landing gear junction box and the fuel pumps relay
4th group	No.16 - 1 piece	ИП-50 fuse in the distribution panel of the left and starboard engines	One К-50Д contactor in the landing gear junction box and one contactor in the fuel pump relay junction box (in the port and starboard landing gear wells)		In the landing gear junction box and the fuel pumps relay
left	No.6 - 1 piece	ИП-50 fuse in the fuel pumps left junction box (on frame No.33)	КД-50Д contactor in the fuel pumps left junction box		
5th group right	No.6 - 1 piece	ИП-50 fuse in the fuel pumps right junction box (on frame No.33)	К-50Д contactor in the fuel pumps right junction box		

[redacted]

50X1-HUM

Table 28

Arrangement of Fuel Level Gauge Transmitters

Name of tank group		Transmitters	
		main transmitters in tank No.	additional transmitt in tank No.
1st group	left	2	-
	right	5	-
2nd group	left	4	-
	right	3	3
3rd group		10	7
4th group		16	12
5th group		6	6

9. The fuel level gauge D.C. supply circuit breaker, type АЗС-2 , is located on the right-seat pilot circuit breaker panel.

10. The automatic unit A.C. supply fuses, type СП-1 , are mounted on the navigator's upper electric board.

11. The automatic unit D.C. supply circuit breaker, type АЗС-5 , is instal on the right-seat pilot circuit breaker panel.

12. Right- and left-hand circuit breakers, type АЗС-2, of the 4th and 5t fuel pump groups are located on the right-seat pilot circuit breaker panel.

13. The fuel consumption control switch AUTOMAT-MANUAL (АВТОМАТ-РУЧНОЕ) ПЧ relay is in the fuel-level gauge junction box on frame No.22.

14. The fuel-pressure warning units, type СД-3ТУ , cutting in warning ligh are located near each fuel pump; they are connected to the fuel line.

15. The PTC-16 fuel-level gauge indicators are mounted on the pilots' cent instrument panel.

16. The PTC-16 fuel-level gauge transmitters are mounted in the fuel line the engine lower part.

17. The thyratron interrupters, type ПТ-51, are located on the navigator-radar operator right-hand rack (Fig.103).

Checking Operation of Fuelmeter System on Aircraft

Prior to checking the fuel pumps automatic control and fuelmeter system make certain that on the navigator's upper electric board СП-1 fuses are mount in the fuel-level gauge A.C. supply circuits.

1. The aircraft mains must be supplied with 28 or 28.5 V D.C. from the ground power supply and with 115 V A.C. from the aircraft operating or stand-by inverter, type ПО-4500.

2. Switch on two FUEL-LEVER GAUGES (ТОПЛИВОМЕРЫ) circuit breakers, type АЗС-2 , on the right-seat pilot circuit breaker panel.

3. Cut in two port and starboard engine fuel-level gauges supply switches, type 2ПП-250, on the right-seat pilot's instrument panel.

4. Set the handle of the port fuel-level gauge switch to the 1 position. This done, in two or three minutes the pointer of the port fuel-level gauge indicator must indicate the amount of fuel filled in the 1st tank group with permissible error of ±320 lit. by the lower scale marks. Press the button on the indicator case; the indicator pointer must stop at the zero scale mark, the permissible error being ±160 lit.; then release the button; in this case the pointer must indicate the amount of fuel filled in the 1st tank group.

After the fuel-level gauge has been checked with the switch in the 1 position, perform checking with the switch in the 2 , 3 , 4 and 5 positions. The instrument pointer must be in the same position as with the switch in the 1 position.

5. Set the handle of the port fuel-level gauge switch to the TOTAL (СУММА) position; the instrument pointer must indicate the total amount of fuel filled in all the five tank groups with permissible error of ±960 lit. by the upper scale marks.

Press the button on the indicator case; the indicator pointer must stop at the scale zero mark; then release the button; the pointer must read the total amount of fuel in all the five tank groups.

6. Set the handle of the port fuel-level gauge switch to the 1 position and press the GROUP CHECKING (ПРОВЕРКА ГРУПП) button on the port group fuel-level gauge amplifier. The pointer of the fuel-level gauge left indicator must indicate the amount of fuel in the group (6000 lit.) with permissible error of ±320 lit. After the fuel-level gauge has been checked with the switch in the 1 position, perform checking with the switch in the 2 , 3 , 4 and 5 positions; the instrument pointer must be in the same position as with the switch in the 1 position.

7. Set the port fuel level gauge switch to the TOTAL (СУММА) position and press the TOTAL CHECK (ПРОВЕРКА СУММЫ) button on the port group fuel-level gauge amplifier. The pointer of the fuel-level gauge port indicator must indicate 16,000 lit. with permissible deviation of ±320 lit.

Notes: 1. The starboard group fuel-level gauges are to be checked in the same manner as the port group fuel-level gauges.
2. After the fuel-level gauges have been checked for proper operation, turn off the switches of the fuel-level gauges starboard and port groups on the right-seat pilot's instrument panel and the ПО-4500 inverter.

Checking Operation of Fuelmeter, Type PTC-16

1. Prior to checking,set the indicating instrument pointer precisely to the amount of fuel filled in the fuel tanks starboard and port groups.

2. Prior to checking, make sure that the PTC-16 fuelmeter A.C. supply fuses, type СП-1А , are mounted on the navigator-radar operator's electric board.

3. Make certain that the PTC-16 fuelmeter D.C. supply circuit breakers, type АЗС-2 , on the right-seat pilot's circuit breaker panel are on.

4. Check the operation of the system with the engines switched on. The accuracy of operation is determined by the fuel consumption per hour.

5. After the PTC-16 fuelmeter has been checked for proper operation, switch off the АЗС-2 circuit breaker on the right-seat pilot's circuit breaker panel.

Checking Operation of Fuel Pumps Manual and Automatic Control System and Their Warning System

1. Switch on the fuel pumps warning system circuit breaker, type АЗС-2, on the right-seat pilot's circuit breaker panel; the green and blue warning lamps must be dead.

2. Set the fuel flow control switch to the MANUAL (РУЧНОЕ) position and on the pilots' upper electric board turn on the switch of the 1st front tank group fuel flow manual control АЗС-5 circuit breaker. The green lamps of the 1st front tank group on the pilots' upper electric board must flash on.

3. Switch off the 1st front tank group fuel flow manual control АЗС-5 circuit breaker (operating as a switch); the warning lamps must go out.

4. Switch on the 1st rear tank group АЗС-5 circuit breaker; the lamps of the 1st rear tank group must flash on. Then turn off the 1st rear tank group АЗС-5 circuit breaker switch; the warning lamps must go out.

5. Turn on the 1st rear and front tank group АЗС-5 circuit breakers; the warning lamps must glow constantly without flickering.

6. Switch on the 2nd group АЗС-5 circuit breaker; the warning lamps of the 2nd group on the upper electric board must flash on, while the 1st group pumps must change over from the nominal to the heavy duty.

7. Switch off the 1st front and rear tank group АЗС-5 circuit breaker; in this case the 1st group warning lamps must go out.

8. Switch on the 3rd group АЗС-5 circuit breaker; the 3rd group warning lamps must flash on, while the 2nd group pumps must change over from the nominal to the heavy duty.

9. Switch on the АЗС-2 circuit breaker of the 4th and 5th group fuel pumps supply on the right-seat pilot's circuit breaker panel.

10. Turn off the switch of the 2nd group АЗС-5 circuit breaker; the 2nd group pumps and warning lamps must get switched off.

11. Turn on the stand-by pumps switch, type 2В-45, on the pilots upper electric board; the 4th group pump warning lamps must flash on.

12. Turn on the 5th group switch, type 2В-45; the 5th group warning lamps must flash on, the 3rd group pumps must change over from the nominal to the heavy duty and the 4th group pumps must change over from the stand-by to the nominal condition.

13. When checking the operation of the fuel pumps, pay attention to the amount of current consumed by them which must be within the data given in the Certificate of the fuel pump.

14. Set the fuel flow control switch on the pilots' upper electric board to the AUTOMATIC (АВТОМАТ) position and the fuel flow manual control АЗС-5 circuit breaker switch to the OFF (ВЫКЛЮЧЕНО) position.

15. Switch on the fuel automatic line АЗС-2 circuit breaker on the right-seat pilot circuit breaker panel.

16. On the pilots' upper electric board turn on the supply switch, type 2ПП-250 , of the starboard and port engines automatic control line amplifier; make sure that the fuel pumps automatic control operates correctly with the given amount of fuel in the aircraft tanks. The flashing of the blue and green warning lamps and the switching on of the fuel pumps depend on the amount of fuel in each group separately. The operation of the automatic control versus the amount of fuel filled is described in the Section "Operation of РД-3М Engines", Book one, "Operating Instructions of ТУ-16 Aircraft".

17. The fuel flow automatic control is performed through two channels independent of each other. The left tank group fuel flow automatic control is duplicated by the right tank group automatic control and vice versa. Therefore, when checking the operation of the automatic control, check the operation of each group separately, that is by switching the 2ПП-250 automatic control amplifiers on and off in turn. The flashing of the warning lamps on the pilots' upper electric board when the amplifiers are switched on and off in turn testifies to serviceability of the amplifiers.

Notes:
1. After the operation of the automatic control has been checked up, switch off the ПО-4500 inverter, if other units operating from the A.C. power supply are inoperative.
2. Set all the switches of the automatic control system on the pilots' upper electric board to the OFF (ВЫКЛЮЧЕНО) position.
3. In case faults of the automatic control are detected during the check up, it is necessary to check the system by means of the УПА-53-60 installation as prescribed by special instructions appended to the installation.

Specifications of Fuel Pumps Control and Fuel Gauge Electric System

Fuel-Level Gauge

1. The fuel-level gauge set operates:
   (a) within ambient air temperature range of -60 to +50°C;
   (b) at A.C. voltage of 115 ± 11.5 V, 400 - 28 c.p.s. and D.C. voltage of 27 ± 2.7 V;
   (c) with outside pressure changed from 760 to 90 mm of mercury, that is at altitudes from 0 to 15,000 m.;
   (d) in conditions of relative humidity from 30 to 98 per cent.

2. The error of the fuel-level gauge reading when bench tested under normal conditions (at temperature of 20 ± 5°C, pressure of 760 mm of mercury, relative humidity of 30 to 98 per cent and voltage of 115 V, 400 c.p.s.) does not exceed ±2 per cent at the zero mark and ±4 per cent of the scale nominal value at the other scale marks.

3. The error of the fuel-level gauge reading at -60°C does not exceed ±6 per cent at the zero mark and ±8 per cent at the other scale marks; at temperature of +50°C the error does not exceed ±3.5 per cent at the zero mark and ±5.5 per cent of the scale nominal value at the other scale marks.

4. The error of the signal unit operation checked by means of the bench does not exceed 10 mm of the float travel in the transmitter.

5. The additional error of the fuel level gauge reading at voltage change of ±10 per cent does not exceed ±1 per cent; at frequency change of $^{+5}_{-7}$ per cent it does not exceed ±1 per cent of the scale nominal value.

6. The insulance of transmitters and switches, type ПГ-7 , at normal temperature and relative humidity of 30 to 80 per cent is not less than 100 megohms and at relative humidity of 95 to 98 per cent - not less than 20 megohms.

7. The insulance of the indicating instrument is not less than 20 megohms at normal temperature and relative humidity of 30 to 80 per cent and not less than 2 megohms at humidity from 95 to 98 per cent.

8. The similar elements of the set within one group are interchangeable.

9. The additional error is ±1 per cent of the fuel-level gauge scale nominal value (taking into consideration possible difference in the capacity of the tanks included in the groups).

[redacted]

10. The first warning signal 30-MINUTE FLIGHT-FUEL REMAINDER (ОСТАТОК ТОП НА 30 МИН.ПОЛЕТА) is sent when the fuel left in one of the 4th tank groups is equal to 600^{+200}_{-100} lit.

11. The second warning signal 15-MINUTE FLIGHT-FUEL REMAINDER (ОСТАТОК ТОП НА 15 МИН. ПОЛЕТА) is sent when the fuel left in one of the 5th tank groups is equal to 1600 ±100 lit.

12. The electrical capacity of "dry" transmitters is given in Table 29.

Table 29

Capacity of Dry Transmitters (Initial Capacity)

Nos	No. of tank and transmitter	Capacity of, transmitters, pF	Nos	No. of tank and transmitter	Capacity of transmitters, pF
1	2	3300	7	6Д	1000
2	3	2300	8	7	1000
3	3л	1000	9	10	2300
4	4	3300	10	12	1000
5	5	3300	11	16	2300
6	6	2300			

PTC-16 Fuelmeter of Fuel Consumed by Each Engine

1. The summing fuelmeter, type PTC-16, operates within a range of 1200 to 16,000 lit. per hour.

2. The error of the fuelmeter set under normal conditions does not exceed ±2.5 per cent.

3. The fuelmeter set at temperatures of +50 and -60°C does not exceed ±4.5 per cent of the indicating instrument scale nominal value.

4. Pressure drop by the transmitter at fuel viscosity of 15 + 1 c.s. (corresponding to fuel temperature of -40°C) and maximum fuel flow of 16,000 lit. per hour does not exceed 0.25 kg per sq.cm. with the impeller operating and 0.4 kg per sq.cm. with the impeller inoperative.

5. The inner chamber of the transmitter body, as well as the connections of the branch pipe with the transmitter body, are gastight and withstand a testing pressure of fluid (kerosene) of 9 kg per sq.cm.

6. Power consumed by the set is 40 W.

7. The thyratron fires with delay of 100 or 200 milliseconds.

Fuel Pumps Automatic and Manual Control

1. The pumps-switched-on signals of the subsequent groups - the transmitters lower warning unit operate when 350 ± 150 lit. remain in one of the tank groups of the same name.

2. The pumps-switched-off signals of the previous groups - the transmitters upper warning unit - must operate when the following amount of fuel remains in one of the tank groups of the same name:

2nd left group, tank No.4	2450 ± 250 lit.
2nd right group, tank No. 3	2250 ± 250 lit.
3rd group	5000 ± 250 lit.
4th group	2300 ± 250 lit.

3. The fuel pump, type ЭЦН-Т , with the MB-650A electric motor:

(a) Electric motor power supply	27 ± 2.7 V D.C
(b) Current consumed by the electric motor:	
main duty	not in excess of 31 A
light duty	not in excess of 19 A
(c) Fluid pressure drop produced by the unit at the output of 14,000 lit. per hour and voltage of 27 V across the electric motor terminals on the ground :	
main duty	0.8 to 0.9 kg per sq.cm.
light duty	0.25 to 0.45 kg per sq.cm.
(d) Pressure produced by the pump at light duty with the cock closed and voltage of 27 V across the electric motor terminals	not on exceed of 0.8 kg per sq.cm.

Note: Check these parameters at ambient air and pressure fluid temperature of 15 to 35°C.

(e) Period of continuous operation	prolonged
(f) Permissible temperature of ambient air during the operation of the unit	from +50 to -60°C
(g) Minimum permissible length of the electric motor brushes	18 mm

Note: The pump heavy duty continuous operation during 60 minutes (15 minutes of them at zero output) is performed by connecting a 5-ohm resistor to the main duty winding circuit.

CAUTION: Change-over to heavy duty can be performed only from the main duty. It is not permitted to start the pump at heavy duty.

4. The fuel pressure warning unit:

(a) At pressure change from 0.35 ± 0.05 to 2 kg per sq.cm. the warning lamp flashes on.

(b) The device operates within the range of +50 to -60°C.

(c) The device warning lamp power is 3 W, its supply voltage is 27 ± 2.7 V.

(d) Errors of the warning unit operation:

at normal temperature	±0.05 kg per sq.cm.
at temperature of +50 and	-45°C ±0.075 kg per sq.cm.

(e) The gastightness of the device must meet the following requirements:

(1) at air pressure of 5 kg per sq.cm. no pressure drop as indicated by the reference pressure gauge must take place in the warning unit sensing element;

(2) the gastightness of the device body ensures that on delivering air under a pressure of 300 mm of mercury simultaneously to the static and dynamic systems pressure drop does not exceed 8 mm of mercury during one minute.

(f) The device can withstand pressure overload of 5 kg per sq.cm. during 5 minutes.

(g) The device insulance at normal temperature and relative humidity of 30 to 80 per cent is not less than 20 megohms.

[redacted]

50X1-HUM

Possible Faults of Fuel Pumps Control Electric System and Their Elimination

Fault	Cause	Remedy
1	2	3
The indicator pointer is pressed to the left-hand limiter	(a) The transmitter circuit is open	Detect the faulty transmitter by switc on the transmitters or a group of transmitters i turn and check its con tion in the plug conne Eliminate the fault
	(b) The outer connecting wires of the transmitter circuit are broken	Check the connectin wires and eliminate th fault
	(c) Break inside the amplifier circuit running to the transmitters	Replace the amplifie
	(d) There is no contact on the PП-3 relay located in the amplifier	Replace the amplifie
	(e) Short circuit of the 6H-9 lamp grid wire to frame in the amplifier	Replace the amplifie
	(f) Shorting to frame of the circuit connecting pin 11 of the switch plug connector to pin 9 of the amplifier plug connector to earth	Check the connectin line and eliminate sh circuit
	(g) There is no contact between the transmitter plates and the plug connector pins	Chock the contact a replace the transmitt
The indicator pointer is beyond the scale maximum	(a) Shorting between the transmitter plates	Detect the faulty tra mitter or the group of transmitters by switchi them on in turn. Remov the faulty transmitter from the tank. Check th insulance between the plates and between ea plate and frame. If th insulance is less tha 100 megohms, wash the faulty transmitter wit clean fuel and dry it. Then re-check the insulance. If the insulance exceeds 100 megohms, mount the transmitter in place. In case the insulance is less than 10 megohms replace the transmitter
	(b) Break of the self-balancing bridge constant capacity arm	Replace the amplifier
When switched over to the TOTAL (СУММА) position, the indicator pointer overshoots the scale maximum	(a) Break in the D.C. supply circuit. The A3C-2 circuit breaker on the right-seat pilot circuit breaker panel is not switched on	Switch on the A3C-2 circuit breaker on the right-seat pilot's circuit breaker panel or eliminate the break of the outside connection circuit wires
	(b) The relay, type PП-6, fails to operate	Replace the amplifier
The indicator pointer fails to move	(a) Break in the A.C. supply circuit	Check the CП-1 fuse on the navigator's upper panel
	(b) The amplifier lamps, types 6H-9 and 6H-9, are out of repair	Replace the lamps and check the serviceability of the set by pressing the CHECK UP (ПРОВЕРКА) buttons on the amplifier front panel. These buttons pressed, the indicating instrument pointer must move towards the scale maximum. The button released, the pointer must return to the initial position
Poor sensitivity of the indicating instrument	(a) The insulance between the transmitter plates and frame is less than 100 megohms	Detect the faulty transmitter or the group of transmitters by switching them on in turn and remove them from the tank. Check the transmitter insulance between the plates and frame. If the insulance is less than 100 megohms, dry the transmitter and re-check the insulance. If the

1	2	3
		insulance is still low, replace the transmitter. Check the fuel for presence of moisture
	(b) Loss of emission of 6H-9 and 6H-8 lamps	Replace the lamps
	(c) The turns of the output transformer primary winding are shorted	Replace the amplifier
With the tanks empty, the indicating instrument pointer shows the presence of fuel in the tanks	The insulance of the line or transmitters is too low	The means of elimination of the fault is the same as in the event of poor sensitivity of the indicating instrument, Item A
The warning lamp fails to flash on	(a) The warning lamp burnt out	Replace the lamp
	(b) The D.C. supply line is damaged	Repair the line
	(c) The A.C. supply line is damaged	Repair the line
	(d) The relay, type PП-6 , is out of repair	Check the transmitter coil by means of a tester Replace the transmitter
	(e) The special sensitive relay is out of repair	Replace the automatic unit

Fuelmeter, Type PTC-16

1	2	3
The indicating instrument fails to operate with fuel being consumed and the transmitter operating	(a) CП-1 fuses are not fitted on the navigator-radar operator electric board	Check the presence of the CП-1 fuse on the navigator-radar operator electric board
	(b) The A3C-2 circuit breaker on the right-seat pilot circuit breaker panel is not switched on	Switch on the A3C-2 circuit breaker on the right-seat pilot circuit breaker panel
	(c) Open circuit.	Using a tester check the connecting wires and eliminate the fault
	(d) Jamming of the mechanism in the indicating instrument	Replace the indicating instrument

1	2	3
	(e) The thyratron in the ПТ-51А thyratron interrupter fails to operate	Replace the thyratron
The transmitter fails to operate with fuel being consumed	(a) Clogging of the transmitter bearings in the guide mechanism - the impeller fails to rotate	Replace the transmitter
	(b) Clogging of the contact mechanism - the interrupter fails to rotate when the impeller is rotating	Replace the transmitter
The indicating instrument pointer fails to rotate when the setting wheel is rotating	The stop spring is damaged or deformed, the stop ball drops out	Replace the transmitter
Great positive error of the set (that is the indicated amount of remaining fuel is greater than the actual amount)	(a) Clogging of the transmitter	Replace the transmitter
	(b) Clogging in the indicating instrument mechanism	Replace the indicating instrument
Great negative error of the set (that is the indicated amount of fuel remaining is smaller than the actual amount)	(a) Poor contact in the connecting wires (most often at the plug connectors and lead-ins)	Thoroughly check the wiring and ensure reliable contact
	(b) The indicating instrument kinematic coupling is disturbed, when the driving pawl engages two teeth during one cycle of the relay operation	Replace the indicating instrument
The transmitter and the indicating instrument are in good repair but the set fails to operate with fuel being consumed	Failure of the thyratron interrupter elements	Replace the thyratron and, if after this the set does not operate, replace the thyratron interrupter

FLAP CONTROL ELECTRIC SYSTEM

The flap control electric system is designed for extending and retracting the flaps, indicating the angle of their deflection and transmitting the horn

[redacted]

50X1-HUM

signals in the front pressurized cabin when the engine throttle control is set to the take-off rating while the flaps are not in the take-off position.

The system includes the following electric units:

- electric mechanism, type МПЗ-3М;
- distant-reading electric flap position indicator, type УЗП-47 ; the instrument set includes one УЗП-47 indicator transmitter and two УЗП-47 indicators;
- limit switches mechanism, type МКВ-11;
- limit switches mechanism, type МКВ-2;
- relay, type РП-2;
- two contactors, type К-250;
- switch, type 2ПН-20;
- switch, type 3ППН-45;
- fuses and circuit breakers.

The electrical units are located in the following places:

1. The flap control electric mechanism, type МПЗ-3М , is mounted on the centre plane between frames Nos 32 and 33.

2. The flap position indicators, type УЗП-47 , are located on the right-seat and left-seat pilots' instrument panels.

3. The transmitter of the УЗП-47 position indicators is installed on the МКВ-2 mechanism.

4. The limit switch mechanism, type МКВ-2, for switching on the warning horn is located on the flap transmission shaft.

5. The limit switch mechanism, type МКВ-11, for switching off the electric motors of the МПЗ-3М mechanism with the flaps in the extreme positions is on the flap driving shaft.

6. The contactor, type К-250, for switching on and off the supply of electric motors Nos 1 and 2 of the МПЗ-3М mechanism and landing flaps junction box is on the bomb bay ceiling at frames Nos 34 and 35.

7. The fuse, type ИП-150 , for electric motor No.1 of the МПЗ-3М mechanism is in the double supply left-hand junction box and for electric motor No.2 is in the right-hand junction box.

8. The flap control switches, type 3ППН-45 , of the left-seat pilot, and type 2ПН-20 of the right-seat pilot are mounted on the engine control panels of the left-seat and right-seat pilots respectively.

9. The relay, type РП-2 , for interlocking which prevents switching the flaps by one pilot for extension and by the other pilot for retraction is installed on the left-seat pilot's engine control panel.

10. The limit switches for switching on sound signalling are mounted on the engine throttle controls on the right-seat pilot's console (Fig.104).

Specifications of Electric Units

1. Electric mechanism, type МПЗ-3М:

(a) mains nominal voltage	27 V
(b) range of mains operating voltage	24.3 to 29.7
(c) loading moment:	
nominal	10 kg-m
maximum	15 kg-m
(d) current with the mechanism operating with two electric motors:	
at nominal moment	not in excess of 190 A

at maximum moment	250 A
current with the mechanism operating with one electric motor:	
at nominal moment	100 A
at maximum moment	125 A
(e) speed of rotation of the mechanism output shaft at nominal voltage and nominal loading moment:	
with the mechanism operating with two electric motors	not less than 240 r.p.m.
with the mechanism operating with one electric motor	120 r.p.m.
(f) speed of rotation of the output shaft in both directions of rotation at nominal voltage, simultaneous operation of two electric motors and a moment of 2 kg-m on the output shaft	not in excess of 420 r.p.m.
(g) friction clutch slipping torque reduced to the mechanism output shaft	18 to 25 kg-m
(h) when determining the direction of rotation of the mechanism output shaft from the side of the angle transmission larger diameter the rotation to the left corresponds to the flap extension and the rotation to the right corresponds to the flap retraction	
(i) mechanism operation duty	intermittent
with two electric motors operating after the extension or retraction of the flaps	5-minute interval; complete cooling of the engines is necessary after 5 cycles
with one electric motor operating after the extension or retraction of the flaps	10-minute interval; complete cooling of the engines is necessary after 2 cycles

(j) the electric mechanism operates normally at ambient air humidity of up to 98 per cent at temperature change from +50 to -60°C and at above-sea-level altitudes of up to 5000 m.

2. Flap position indicator, type УЗП-47:

(a) mains voltage	27 + 2.7 V
(b) the indicator operates at temperatures	from +50 to -60°C
(c) power consumed by the set	not in excess of 5 W

[redacted]

50X1-HUM

(d) current consumed by the transmitter .... not in excess of 100 mA

(e) set indications error .... not in excess of ±1°

3. Limit switch mechanism, type МКВ-2:
(a) nominal voltage .... 24 V
(b) maximum current at ohmic load .... 15 A
(c) maximum load at inductive load .... 8 A

4. Limit switch mechanism, type МКВ-11:
(a) operating voltage range .... 23.4 to 30 V
(b) maximum current at ohmic load .... 15 A
(c) maximum current at inductive load .... 8 A

5. Full angle of flap extension .... 35 ± 1°

6. The sound signalling is switched off with the engine throttle control in the take-off rating position when by the УЗП-47 flap position indicator the flaps are extended by an angle .... from 19 - 1° to 23 - 1°

7. Flap extension time with both electric motors operating simultaneously and at current not in excess of 155 A and voltage of 26 V .... not in excess of 25 sec.

8. Flap retraction time with both electric motors operating simultaneously and at current not in excess of 160 A and voltage of 26 V .... not in excess of 25 sec.

9. Flap extension time with one engine operating at current not in excess of 80 A and voltage of 26 V ..... not in excess of 50 sec.

10. Flap retraction time with one engine operating at current not in excess of 85 A and voltage of 26 V ..... not in excess of 50 sec.

Checking Flaps Operation under Voltage

1. On the left-seat pilot's circuit breaker panel switch on two LANDING FLAPS (ПОСАДОЧНЫЕ ЩИТКИ) circuit breakers, type АЗС-5 , and LANDING FLAPS AN AIR TEMPERATURE INDICATORS (УКАЗАТЕЛИ ПОСАДОЧНЫХ ЩИТКОВ И ТЕМПЕРАТУРЫ ВОЗДУ) circuit breaker, type АЗС-2 ; on the right-seat pilot's circuit breaker panel switch on the HORN (СИРЕНА) circuit breaker, type АЗС-2.

CAUTION: 1. Prior to switching on the circuit breakers on the right and left pilots' console, check the position of the flap-control switches which must be in the neutral position.

2. Prior to extending or retracting the flaps make sure that the flaps and the flap driving gear are clear of personnel and that the ladders and the cases are removed.

2. With the flaps in the retracted position, set the left-seat pilot switch to the RETRACTED (УБРАНО) position. This done, by short pulses set the right-seat pilot switch to the EXTENSION (ВЫПУСК) position; the flaps must not get extended.

3. By means of the left-seat pilot switch extend and retract the flaps completely (Fig.105). When extending the flaps by operating the left-seat pilot switch, set the right-seat pilot switch to the RETRACTED (УБРАНО) position by short pulses. The flaps must continue extending.

4. The flap control operation is checked from the left-seat control switch and from the right-seat control switch by means of both electric motors and by each electric motor separately. Check the flap control operation from the right-seat pilot console after the flaps have been checked for complete extension and retraction from the left-seat pilot console.

When checking the flap control from the right-seat pilot console, do not extend and retract the flaps completely (Fig.106).

5. When extending and retracting the flaps, set the engine throttle control to the take-off rating; the horn must hoot all the while. When the flaps are deflected from 19 to 23° during extension and from 23 to 19° during retraction the horn must not hoot.

6. When checking the flap control operation check the operation of the flap position indicators. During the extension and retraction of the flaps the pointer of the УЗП-47 indicators must move without noticeable jerks and jamming. The difference in the flap position indicators reading of the right-seat (Fig.107) and left-seat pilots must not exceed ±1°.

TAIL SKID CONTROL AND LANDING GEAR WARNING ELECTRIC SYSTEM

The tail skid control and landing gear warning electric system is designed for:

(a) sending out signals of the landing gear legs extended and retracted positions seperately;

(b) control of the tail skid extension and retraction;

(c) sending out sound signals in case the throttle control is in the off position and the landing gear is not extended.

The system includes the following units:
МП-250 electric mechanism;
СЦ-51 warning lamp - 8 pieces (5 green lamps and 3 red lamps);
ВК-44 limit switch - 6 pieces;
ВК-2-140В limit switch - 1 piece;
ВК-2-14Г limit switch - 2 pieces.

The electric units are located as follows:

1. The tail skid electric mechanism, type МП-250 , is mounted on frame No.65.

2. The landing gear extended and retracted positions warning lamps, type СЦ-51 , are located on the pilots' central instrument panel.

3. The tail skid retracted position warning lamps, type СЦ-51 , are installed in the rear cabin on the gunner-radio-operator's and rear gunner's electric boards.

4. The blocking limit switches, type ВК-2-142Г , designed for switching on sound signalling in case the throttle control is in the off position with the landing gear retracted are mounted on the right-seat pilot engine control panel.

5. The ВК-44 limit switches (Fig.108) designed for switching on the landing gear main legs extended position warning lamps are located on the landing gear starboard and port legs struts.

[redacted]

The BK-44 limit switches designed for switching on the main and nose legs retracted position warning lamp are mounted on the landing gear legs up-locks. The BK-2-140B nose leg extended position limit switch is mounted on the nose leg down-lock.

6. The BK-44 limit switch serving to switch the tail skid for retraction and extension is located on the nose leg up-lock.

7. The HH-5 fuse in the MH-250 electric mechanism supply circuit is in the double supply left-hand junction box on frame No.17.

Specifications of Electric Units

1. Tail skid control electric mechanism, type MH-250:

(a) supply voltage	27 ± 2.7 V
(b) rod load	
nominal	250 kg
maximum	375 kg
(c) current	
at nominal load	not in excess of 3.4 A
at maximum load	not in excess of 3.8 A
(d) rod travel	180 ± 1 mm.
(e) rate of rod travel at voltage of 27 V and nominal load opposite to the rod travel 6.2 ± 0.62 mm/sec.	
(f) duty of operation at nominal data	intermittent, consisting of 5 cycles followed by an interval of one hour at least
(g) brushes A-12 measuring	4x5x7
(h) altitude	15,000 m.

2. Limit switch, type BK-44:

(a) rod travel downward before the contacts are changed over	5 + 1.8 mm
(b) rod reserve travel downward after the contacts are changed over	not less than 1.5 mm
(c) travel of the additional device downward after changing over	4 + 1.5 mm
(d) full travel of the rod and the additional device button	from 10.5 to 15 mm
(e) reverse travel of the rod upward after the contacts are changed over	not in excess of 4.5 m
(f) reserve travel of the rod upward after the contacts are changed over	not less than 1.5 mm
(g) force applied to the rod to change over the contacts	4 to 6 kg

(h) force applied to the rod at the beginning of compression of the additional device spring	5 to 7 kg
(i) difference between the forces	not less than 1 kg
(j) force applied to the rod at the end of compression of the additional device spring	11 to 15 kg
(k) operating voltage	27 ± 2.7 V current flowing through the contacts 10 A
(l) the switch operates within the ambient air temperature range	from -60 to +50°C
(m) operating altitude	from 0 to 15,000 m.
(n) range of the rod total length adjustment	7.7 mm

Checking Operation of Tail Skid Control and Landing Gear Warning System under Voltage

Checking the Operation of the Warning System without the Landing Gear Kinematics Adjustment

1. Switch on the L.G. legs position warning system circuit breaker, type A3C-2, on the left-seat pilot's circuit breaker panel and the sound signalling circuit breaker, type A3C-2 , on the right-seat pilot's circuit breaker panel. The three green warning lamps mounted on the pilots' instrument panel must flash on.

2. Press the limit switches, type BK-44, on the L.G. main legs up-locks and the left-hand limit switch, type BK-44, on the L.G. nose leg up-lock. The three green warning lamps on the pilots' central electric board must flash on.

Checking the Operation of the Tail Skid Control and Warning System with the Landing Gear Kinematics Adjustment

1. Switch on the L.G. legs position warning system circuit breaker, type A3C-2, on the left-seat pilot's circuit breaker panel and the sound signalling circuit breaker, type A3C-2 , on the right-seat circuit breaker panel; if the landing gear is extended the green warning lamps must flash on.

2. As soon as the landing gear legs start rising, the three L.G. extended position green warning lamps must go out. The legs reaching the extreme retracted position, the three L.G. retracted position red warning lamps on the pilots' central electric board must flash on. The L.G. nose leg reaching the extreme retracted position, the tail skid control mechanism must get automatically on for retraction.

With the tail skid completely retracted, the electric mechanism must get automatically switched off; simultaneously the two green warning lamps of the tail skid retracted position must flash on; one of the lamps is mounted on the

[redacted]

50X1-HUM

rear gunner's electric board; the other lamp - on the gunner-radio operator's electric board.

3. Pull up in turn both throttle controls on the right-seat pilot's control panel as far as they will go. In this case the horn in the front pressurized cabin must hoot. Switch off the horn by pressing the button on the right-seat pilot throttle controls designed for mechanical disconnection of the horn.

4. As soon as the L.G. legs start extending all the three L.G. retracted position red warning lamps must go out and the tail skid electric mechanism must get switched on for extension; after the tail skid has been completely extended the electric mechanism gets switched off and the two green lamps of the tail skid retracted position go out.

5. Pull up both throttle controls as far as they will go. The horn must be silent.

During the landing gear check make sure that the adjustment of the limit switches is not disturbed. The adjustment of the landing gear limit switches is described in the Section "Landing Gear", Book one, "Service Manual of the Aircraft, Model ТУ-16".

TRIM TAB ELECTRIC CONTROL SYSTEM

The trim tab electric control system of the aircraft is used for remote control of the aileron, elevator and rudder trim tabs, and at the same time as a system providing light indication of the neutral position of the aileron and rudder trim tabs.

The system comprises the following units:

- two electric actuators, type МП-100А-60;
- one electric actuator, type МП-100А-36;
- one electric actuator, type УТ-11;
- aileron synchronization console;
- limit switches, change-over switches and circuit breakers;
- three tell-tale (warning) lights with white screens.

The electric units are located as follows:

1. The electric actuators, type МП-100А-60 , of the aileron trim tabs - between ribs 18 and 19 of the right and left wings; the actuators are accessible through the underwing access holes.

2. The electric actuator, type МП-100А-36, of the rudder trim tab - between ribs 2 and 3 of the fin; the actuator can be reached upon removal of the adjacent skin portion of the fin.

3. The electric actuator, type УТ-11 , of the elevator trim tab and its ВК-141В limit switches of the up and down positions - at fuselage frame No.69; the units are accessible upon removal of the stabilizer access hole panels.

4. The aileron trim tab control change-over switch, type 2ПН-20 , and the rudder trim tab control change-over switch, type ПН-45М , - on the trim tab control panels (stations) of the pilot and co-pilot.

5. The elevator trim tab control change-over switch, type ПН-45М, - on the control wheel spokes of the pilot and co-pilot (Fig.109).

6. The В-45 switch used for emergency disconnection of the elevator trim tab electric control system - under the red cap on the overhead electric control board of the pilots.

7. The white СЦ-51 tell-tale lights indicating neutral position of the aileron and rudder trim tabs - on the pilot's instrument panel (Fig.110).

8. The aileron trim tab synchronization console (Fig.111) carrying the trim tab control change-over switch, type ПН-45 , white СЦ-51 light indicating the left aileron neutral position and auxiliary (blocking) contact, type КЭ-6, - between frames Nos 9 and 10, port side.

Technical Characteristics of Electric Actuators

Electric Actuator, Type МП-100А

1. Voltage requirement	27 ± 2.7 V
2. Current requirement:	
at nominal rod load of 100 kg	not over 1.35 A
at maximum rod load of 150 kg	not over 1.4 A
3. Rod speed at 27 V voltage and nominal rod load	1.65 mm/sec.
4. Tell-tale light glow duration with rod midposition travel restricted by limit switch within ±1 mm	0.5 to 2 mm of travel length
5. Operating duty in nominal conditions	intermittent, consisting of 6 cycles followed by obligatory complete cool-down of the actuator
6. Brushes, mark A-12, sizing	4x5x7 mm
7. Motor speed	4100 ± 410 r.p.m.
8. Operating altitude	up to 15,000 m.
9. Working travel length of МП-100А-36 actuator rod	36 mm
10. Working travel length of МП-100А-60 actuator rod	60 mm

Electric Actuator, Type УТ-11

1. Operating voltage range	23.4 to 28.6 V
2. Current requirement:	
at nominal load of 180 kg/cm.	not over 2.8 A
at maximum load of 260 kg/cm.	not over 3.3 A
3. Output shaft speed	7 r.p.m. ± 0.7%

Voltage Check of Trim Tab Electric Control System

1. Turn on the АЗС-5 aileron, elevator and rudder trim tab control circuit breakers on the pilot's circuit breaker control board.

2. Prior to beginning the trim tab operation check, make sure that the aileron and elevator covers are removed, and there are no obstacles under the aircraft to hinder the trim tab movement.

3. Engage the В-45 elevator trim tab electric control emergency disconnecting switch on the pilots' overhead electric control panel.

4. Hinge out the lock on the pilot's control wheel which secures the ПН-45М elevator trim tab change-over switch.

Operating the switch in pulses and engaging it for continuous operation, move the elevator trim tabs from one extreme position to the other. With the trim tabs in motion, the elevator trim tab control handwheel will be rotating.

5. Operate the ПН-45М elevator trim tab change-over switch on the scale of the elevator trim tab control handwheel to set the trim tab neutral.

6. By operating the trim tab switch, type ПН-45М , on the left-seat pilot's steering wheel switch on the УТ-11 mechanism, then switch off the В-45 trim tab

[redacted]

emergency cutout. This done, the trim tab electric mechanism stops operating; it begins to operate after the cutout is switched on.

7. Close the stop on the elevator trim tab switch, with a slight movement pull and push the switch; the electric mechanism must not operate.

8. By means of the rudder trim tab switch, type ПН-45М , and the aileron trim tab switch, type 2ПН-20 , on the left-seat pilot trim tab control panel (Fig.112) shift the trim tabs in both directions till they are completely deflected, then set the trim tabs to the neutral position. The trim tab neutral position warning lamps must flash on.

9. Open the aileron synchronization panel cover. With the aileron trim tab in the neutral position, the neutral position warning lamp on the panel must flash on. On pressing on the blocking contact, type КВ-6, the warning lamp must go out.

10. Shift the ПН-45М switch on the trim tab synchronization panel to the right or to the left. This causes the L.H. wing aileron electric mechanism to operate, the R.H. wing aileron mechanism being inoperative.

11. The aileron trim tabs must be synchronized. For this turn on by pulses the aileron tabs control switch on one of the pilots' consoles till the aileron trim tab neutral position lamp flashes on the left-seat pilot instrument panel, and the left aileron trim tab control switch on the synchronization panel till the lamp on the synchronization panel flashes on. Synchronization is ensured if both lamps on the left-seat pilot's instrument panel and on the synchronization panel glow simultaneously.

12. After the operation of the trim tab control from the left-seat pilot's console has been checked, check the operation of the trim tabs control from the right-seat pilot's console as prescribed in Items 4, 5, 6, 7 and 8.

13. When checking the trim tabs operation, make sure that:

(a) the trim tab switches on the left-and right-seat pilots' console have guards and that the stenciled markings are intact and not dirty (Fig.113);

(b) the elevator trim tabs are deflected upward when the elevator trim tabs control switch is pushed forward and that they are deflected downward when the elevator trim tabs control switch is pulled backward;

(c) the rudder trim tab is deflected to the left when the rudder trim tabs control switch is shifted to the right and the trim tab is deflected to the right when the control switch is shifted to the left;

(d) the right aileron trim tab is deflected downward and the left one upward when the aileron trim tab control switch is shifted to the right; the right aileron trim tab is deflected upward and the left one downward when the aileron trim tab control switch is shifted to the left.

CAUTION: It is prohibited to turn on the trim tab switches simultaneously on the consoles and steering wheels of the right- and left-seat pilots.

14. The operation checked, set the trim tabs to the neutral position, fix in position the trim tab switches on the steering wheels and close the synchronization panel with the cover.

Possible Faults of Electrical Part of Trim Tab Control System and Their Elimination

Fault	Cause	Remedy
The trim tab deflects in one direction and fails to deflect in the other direction	(a) Jamming of the mechanism (b) Failure of the electric motor	Replace electric mechanism
The neutral position lamp is flickering	(a) Poor contact in the plug connector for switching on the mechanism (b) Poor contact in the mechanism warning lamp switching on system	Eliminate the defect in the plug connector Replace the electric mechanism

BRAKE SYSTEM PUMP CONTROL ELECTRIC SYSTEM

The electric units mounted in the system regulate the pump operation thus maintaining pressure in the brake hydraulic system within certain limits and transmit signals at minimum permissible pressure.

The electric system includes the following main units:

- hydraulic pump 465 K with the electric motor, type Д-4500К;
- pressure drop warning unit, type СПМ-130;
- pressure switch, type ПДМЗ-150;
- contactor, type К-400Д;
- relay, type РП-2;
- fuse, type ИП-250;
- warning lamp, type СЛЦ-51 , with red light filter (2 pieces).

The electric units are located as follows:

1. The hydraulic pump 465 K, the СПМ-130 pressure drop warning unit and the ПДМЗ-150 pressure switch are located in the hydraulic panel at frame No.15.

2. The contactor, type К-400Д , designed for switching on the hydraulic pump electric motor, the intermediate relay, type РП-2 , for switching on the hydraulic pump and the fuse, type ИП-250 , are connected in the hydraulic pump electric motor supply circuit and are mounted in the hydraulic panel junction box at frame No.15.

3. The pressure drop warning lamps, type СЛЦ-51 , of the normal and emergency hydraulic systems are mounted on the pilots' central electric board.

Checking Operation of Hydraulic System Electric Control

1. On the left-seat pilot's circuit breaker panel switch off the two hydraulic system control and warning circuit breakers, type АЗС-2, and release to zero hydraulic pressure from the main and emergency hydraulic accumulators of the brake hydraulic system. From the main hydraulic accumulator pressure is released by the operation of the main brake system valves (by pressing the pedals) or through the shut-off valve in the hydraulic panel on frame No.15; from the emergency hydraulic accumulator pressure is released by the operation of the emergency brake valve on the pilot's central panel.

[redacted]

50X1-HUM

2. Switch on the two hydraulic system control and warning circuit breakers, type АЗС-2 . The two red lamps warning of pressure drop in the normal and emergency systems on the pilots' central electric board must flash on.

3. Turn on the hydraulic pump control switch on the pilots' central panel. The hydraulic pump must start operating and increase pressure in the hydraulic system.

With the hydraulic system pressure not exceeding 35 kg per sq.cm., release the switch handle; the hydraulic pump must continue operating. At a pressure of 100 ± 5 kg per sq.cm. the normal system pressure drop warning lamp must go out; pressure reaching 130^{+5}_{-2} kg per sq.cm., the emergency system pressure drop warning lamp goes out. At a pressure of 150^{+5}_{-2} kg per.sq.cm. the hydraulic pump gets automatically cut off.

4. By means of the main brake valve, release pressure in the normal hydraulic system. With pressure dropping to 120^{+5}_{-2} kg per sq.cm., the hydraulic pump starts operating; at a pressure of 150^{+5}_{-2} kg per sq.cm. the pump gets cut off.

5. By means of the emergency brake valve release pressure from the emergency system. Pressure reaching 130^{+5}_{-2} kg per sq.cm.,the emergency hydraulic system pressure drop red warning lamp must flash on.

Note: 1. The operation of the brake hydraulic system pressure control electric system should be checked by the aircraft technician together with an electrician.
2. When checking the operation of the hydraulic system, see that proper operation duty of the hydraulic pump is maintained.
3. During the operation of the hydraulic pump make sure that the current consumed by the pump electric motor is within the rated limits.

Specifications of System Electric Units

Electric Pump 465K and Electric Motor A-4500K

1. Direction of rotation	left
2. Nominal voltage	27 V
3. Voltage operating range	24 to 30 V
4. Consumed current:	
at operating pressure of 150 kg per sq.cm.	not in excess of 180 A
at maximum pressure of 180 kg per sq.cm.	not in excess of 260 A
5. Permissible peaks	not in excess of 300 A, up to 2 sec.
6. Operation temperature range	from +70 to -60°C
7. Electric motor operating altitude	12,000 m.
8. Brush minimum length	14 mm
9. Operation duty on the ground	60-min. operation followed by complete cooling (not less than 1 hour)
at altitudes	30-min. operation followed by complete cooling

Pressure Drop Warning Unit, Type СДМ-130

1. Operation pressure	130 kg per sq.cm.
2. Error of the contact operation at normal temperature	not in excess of $^{+5}_{-2}$ kg per sq.cm.
3. The instrument operates at 0.5 A and 27 ± 2.7 V	
4. Maximum vibration overload	not in excess of 2.5 g, with error not exceeding $^{+6}_{-2}$ kg per sq.cm.

Pressure Switch, Type ПДУЗ-150

1. Pressure operating range	from 0 to 150 kg per sq.cm.
2. Error of contact operation at normal temperature:	
at points 30 and 100 kg per sq.cm. ± 5 kg per sq.cm.	
at points 120 and 150 kg per sq.cm. ± 5 kg per sq.cm.	
3. Maximum vibration overload	not in excess of 1.5 g
error of operation:	
at points 120 and 150 kg per sq.cm.	$^{+5}_{-2}$ kg per sq.cm.
at points 30 and 100 kg per sq.cm.	±6 kg per sq.cm.
4. The instrument operates at 27 ± 2.7 V and 0.5 A.	

CABIN HEATING ELECTRIC SYSTEM

The cabin heating electric system is designed to prevent the glass pains from dimming, as well as for additional heating of the cabin by means of electric heaters "Unit 107". In the front cabin the heater is installed at the starboard side near frame No.5; the switches are mounted on the pilots' upper electric boards. In the rear cabin the heater is installed on the port side near frame No.73 (Fig.114), the switches being mounted on the radio operator's electric board (Fig.115).

The fuses, type ИП-150 , of the electric heater circuits are located as follows: for the front cabin on the starboard side at frame No.6 in the glass pain heating system junction box, for the rear cabin on the port side at frame No.74 in the rear cabin junction box.

Specifications of the Heater "Unit 107"

1. Voltage	D.C. 27 ± 2.7 V
2. Current in the heating element circuit at V = 27 V (with 3 heating elements cut in)	not in excess of 135 A
3. Current in the ventilator motor circuit at V = 27 V	not in excess of 30 A
4. Heating value:	
(a) at altitudes from 0 to 7000 m.	3000^{+120}_{-510} Kcal per hour

[redacted]

50X1-HUM

(b) at altitudes from 7000 to 15,000 m.	2000^{+80}_{-340} Kcal per hour
5. Brushes, type МГС-7 ; minimum length	10 mm
6. Operating altitude	up to 15,000 m

Checking Operation of Cabin Heating Electric System

1. Switch on the heater control circuit breaker, type АЗС-30, on the ri seat pilot's circuit breaker panel.

2. Turn on the HEATER-VENTILATOR (ОБОГРЕВАТЕЛЬ-ВЕНТИЛЯТОР) switch on th pilots' upper electric board. The heater ventilator must force air through. On switching on the 1st section warm air must start coming out of the heater in some time; when the 2nd section is switched on in addition to the 1st section still warmer air comes out of the heater. Make sure that air from the slot of the pipe line nozzles of the navigator's, pilots' and blisters glass panels co at constant pressure.

Check the operation of the heater in the rear cabin in a similar manner a the operation of the heater in the front cabin.

When checking the operation of the heater "Unit 107", measure the curren consumed; normal current consumption testifies to the proper operation of the heater.

Notes:
1. In case the electric motor, type Д-400А , fails, it is prohi to switch on the heater.
2. Prior to switching on the power supply, make sure that there a no foreign objects at the ventilator window and on the body of "Unit 107". Remove foreign objects, if any.
3. Switch off the heater after its operation has been checked.

Possible Faults of Cabin Heating Electric System and Their Elimination

Fault	Cause	Remedy
1	2	3
The heater body is overheated during operation	(a) The ventilator window is closed by foreign objects	Remove the foreig objects
	(b) The non-return valve operates with jamming	Check the operatio of the non-return val in the tube connecti the heater with the p line. If jamming is detected, eliminate i
	(c) The thermoswitch fails to operate	Remove "Unit 107" fr the aircraft. Check t operation of the ther switch. In the event o its improper operatio replace the thermos

1	2	3
	(d) The altitude relay fails to operate	Remove "Unit 107" from the aircraft and check the operation of the altitude relay. In case the latter fails to operate properly, replace it.

PREFLIGHT PREPARATION

Systematic maintenance operations on the aircraft electrical equipment are absolutely necessary to ensure normal operation of the equipment; the main elements of the maintenance procedure are the preflight preparation, postflight inspection and scheduled maintenance operations.

The scope of the preflight preparation depends on the scope and results of the previous postflight inspections and the thoroughness with which the troubles detected in flight and during the ground check have been eliminated.

The preflight preparation and postflight inspection of the aircraft electrical equipment consist in inspecting the electric wiring and units for condition and in voltage testing of the units.

It is advisable to adhere to the following ground check inspection procedure (walk-around) during the preflight preparation and postflight inspections of the electrical equipment:

(1) front cabin and fuselage between frames Nos 12-14;
(2) L.G. nosewheel well;
(3) L.G. left strut nacelle;
(4) navigation lights of left outer wing panel;
(5) stern cabin and tail skid;
(6) accessories compartment between frames Nos 56-69, fuselage belly section and bomb bays;
(7) L.G. right strut nacelle;
(8) navigation lights of right outer wing panel;
(9) top sections of fuselage and wings;
(10) nacelles of right and left engines.

Preflight Preparation before Energizing Electrical Equipment

Front Cabin and Fuselage between Frames Nos 12-14

1. Make sure that the storage battery switch on the radar operator's electric control board is OFF.

2. Carry out the following checks at the radar operator's station:

(a) check the ON-OFF and change-over switches, circuit breakers, rheostats and operating knobs of the cabin light and ultra-violet illumination system for proper functioning; the check is done by manually engaging and disengaging the above-mentioned items; check for proper attachment;

(b) make sure that the glasses of the ammeters, voltmeters and lights are intact and that the instruments are securely attached in their mounting positions;

(c) see to it that the voltmeter and ammeter needles are zeroed and that the fuel system boosters are reliably fastened to their mounting platforms.

[redacted]

50X1-HUM

3. The following checks should be carried out at the stations of the pilots and navigator:

(a) check (by engaging and disengaging with the hand) the ON-OFF and change-over switches, as well as the circuit breakers, operating knobs and rheostats for sound operation;

(b) check the signalization and illumination equipment for condition and secure attachment;

(c) make sure that the cabin heater (Unit 107) and the AOC-81M automatic glass panel temperature controller are reliably attached and that their shock absorbers function properly.

4. When through with the checks, place all the ON-OFF and change-over switches and the circuit breakers (which serve as switches) to OFF (ВЫКЛЮЧЕНО) or NEUTRAL (НЕЙТРАЛЬНО).

5. Make sure that spare bulbs and fuses are available in the flight maintenance kit.

6. See to it that the hydraulic control panel connections from the units of the hydraulic system automatic control equipment are intact.

7. Inspect and make sure that the union nuts on plug connectors and fire extinguisher discharge bonnets at frame No.12 are properly tightened up and lockwired.

L.G. Nosewheel Well

1. Check to see that the glasses of the landing, taxiing and well illumination lamps are intact and that the lamps are attached securely.

2. Check to see if the limit switches on the lock and brace strut of the L.G. nosewheel are intact and reliably attached; inspect for secure wire connections.

3. Check the fuel system boosters and ПО-4500 inverters for secure attachment and see that the firing (discharge) mechanisms on the discharge bonnets of the CO_2 and inert gas bottles are properly locked.

Right and Left L.G. Strut Nacelles

1. Check the limit switches on the locks and shock absorbers of the main L.G. legs for secure attachment and sound operation.

2. Check the wires for proper attachment and connection to the limit switches, taxiing lamp and automatic brake control units, type УА-16

3. Check the bottom formation light and illumination equipment for sound operation.

Navigation Lights of Left and Right Outer Wing Panels

1. Inspect the attachment fittings of the navigation light equipment and make sure that the cover glasses of the lights are intact.

2. Make sure that there is no water, ice or dirt under the light common glass.

Stern Cabin and Tail Skid

1. Operating the switches, control knobs, circuit breakers and rheostats manually, make sure that they function properly.

2. Make sure that the cabin heater and the warning (signalization) equipment are attached reliably.

3. Place all the switches and rheostats OFF.

4. Check the voltmeter for condition and make sure that the instrument and its cover glass are securely held in place.

5. Inspect the tail navigation light system and make sure that the glass covers and the attachment fittings are intact.

6. Check the tail skid actuator and its electric wires for condition and attachment.

Accessories Compartment between Frames Nos 56 and 69, Fuselage Belly Section and Bomb Bays

1. Check to see if the MKA-3A actuator, the de-icer junction box and the circuit breaker of the autopilot servo-unit heater systen are attached securely.

2. Check electric wires for condition and secure attachment.

3. Inspect the bottom formation light system.

4. In the bomb bays: check the electric wires for condition, and the junction boxes and landing flap actuator, type МПЗ-3М, for reliable attachment.

5. Check the PC-18000 ballast resistor for secure attachment and proper wiring.

Top Section of Fuselage and Wings

Check the top formation light system for condition and reliable attachment.

Right and Left Engine Nacelles

Check the electric equipment of the engines for proper attachment and the electric wires for condition; check to see if the ГСР-18000 generators, РУТ-82 voltage regulators, TC-8 stability transformers and the overheat warning units are attached securely.

During external inspections of the equipment in all the aircraft sections make sure that the fuses on the control panels and in boxes meet the Specifications indicated on the respective nameplates and are reliably attached, that the covers of the connector boxes are tight at their edges, and that the locks are lockwired and reliably retain the covers against vibration and falling out in flight.

Autopilot, Type АП-5-2М

1. Carry out condition and voltage checks of the autopilot units. Inspect externally to check whether the autopilot units are free from moisture, dust and breakdowns in connections to aircraft structural members. Remove the covers from the formation stick and directional stabilizer.

2. The autopilot preflight preparation procedure is obligatory before each flight. If several flights take place during one day, it is sufficient to carry out the preflight preparation before the first flight.

3. If the ambient air temperature is below minus 20°C, the autopilot heaters should be engaged for one hour before the flight.

4. Turn on the АЗС-15 circuit breaker of the torque motor assembly on the navigator's circuit breaker control panel, the АЗС-5 circuit breaker on the pilot's circuit breaker control panel, and the master switch on the autopilot control panel, and check the autopilot operation under voltage.

Check the clutch tension by hand, employing the following procedure:

(a) engage the bomb sight and autopilot clutches;

(b) turn the bomb sight so that the autopilot clutch lever would reach its stop. In this position the autopilot clutch begins to slip on its drum; during the further rotation the clutch should not slip;

[redacted]

50X1-HUM

(q) turn the switches on the autopilot control panel off.

Voltage Test of Electrical Equipment

1. Carry out external inspection of the storage half-batteries, type 12-CAM-55. If the batteries are operative, install then on the aircraft, fasten in place and close the container covers.

2. Place the storage battery change-over switch to the NORMAL (НОРМАЛЬНО) position, and check for loads by the ammeter on the radar operator's electric control board. Engage the gyro horizon sets of the pilot and co-pilot and the interphone set which will correspond to a 10 to 12 A load on the battery, and check the battery voltage. The indicated voltage should not be smaller than 24 V. Disconnect the gyro horizon sets and the interphone system, and set the storage battery change-over switch to the neutral position.

3. Connect the storage battery in turn to the normal supply circuit and to the triple supply busbar. To make certain that the storage battery energizes these circuits, engage the gyro horizon sets of the pilot. When the storage battery is connected to the normal supply circuit, both gyro horizons should operate. When the battery is connected to the triple supply busbar, it is only the stand-by gyro horizon which should operate. The operation of the gyro horizons will be indicated by the noise of the inverter.

4. Disconnect the gyro horizon sets and the storage battery.

5. Connect the aircraft electric mains to a ground supply source.

6. Operating collectively with the aircraft technician or mechanic, check the following:

(a) operation of the control system of flaps, elevator and rudder trim tabs and of ailerons. Synchronize the operation of the aileron trim tabs;

(b) operation of the tail unit de-icers;

(c) glass panel electric heating system;

(d) L.G. warning system: hand pressure upon the limit switches corresponding to the L.G. retracted position should result in flashing up of the red warning lights; at the same time the green L.G. position warning lights should go on burning;

(e) operation of the main and stand-by inverters, type ПО-4500 , with reference to the aircraft A.C. voltmeter;

(f) operation of the fuel automatic control system and of the fuel flow gauges;

(g) operation of the cabin ventilators and heaters.

7. Check the operation of the unit of fire-fighting system electromagnetic valves; while checking, do not engage the АЗС-10 circuit breaker which opens the CO_2 bottles and the inert gas system switch, type В-45, on the overhead electric control panel of the pilots since otherwise the discharge bonnets (firing mechanisms) will be actuated.

8. When testing the operation of the engines, check the operation of the generators; if necessary, adjust the generator voltage and check the generator-to-emergency supply circuit voltage supply.

POSTFLIGHT INSPECTION

Gain information on the in-flight operation of the electrical equipment from the crew members.

De-energize the aircraft electric mains and disconnect the storage batteries. This done, proceed to inspecting the system. The sequence of inspections is the same as that authorized for the preflight preparation.

Subject to inspection will be: the electrical equipment, the warning (signalization) system, the illumination equipment, the electric actuators, the bunched conductors and junction boxes. When inspecting, make sure that:

1. All the equipment fittings, rheostats, switches, relays, bulbs, receptacles, circuit breakers and other equipment items are securely attached to their mounting panels and boards.

2. All the nameplates and instruction plates which concern the function or operation of separate units and switches are in good condition (are neither erased nor fouled).

3. The clearance between the bunched conductors and moving parts is at least 10 mm.

4. The union nuts of the plug connectors are adequately tightened up and lockwired.

5. The mounting areas of the plug connectors and special wire adapters have no damaged portions of cabin-sealing cement.

6. The gaps between the power contacts and the airframe members gauge at least 5 mm. Special attention should be paid to insulating the wires from the mass ("airframe") as any contact of a bare plus wire with the airframe results in short-circuiting.

7. Reliable contact is ensured at the connections of power contacts.

8. In case of dirt, dust, oil or moisture on the electric wires or equipment items, wipe them with a clean cloth.

9. Carry out external inspection of the storage half-batteries and make sure that:

(a) the half-batteries are clean from the outside;

(b) there are no cracks and breakdowns in the electric contacts and intercell connections;

(c) the monoblock, cover and vent plugs are free from fouling and damage; clean fouled spots, if any.

Note: If the storage battery is damaged, send it over for detailed inspection and correction of faults.

10. Check the condition of the storage battery containers:

(a) see to it that the felt is not moistened with electrolyte;

(b) check to see if the wires in the container are intact;

(c) see to it that the container cover locks are intact;

(d) make sure that the storage battery connectors connecting it to the aircraft electric mains are sound.

The inspection over and the detected troubles eliminated, turn off all the switches but for the interlock switch operating with the generator switch connecting bar; place the storage battery change-over switch neutral, connect the ground supply source and carry out the voltage check of the electrical equipment.

Correct all the troubles detected during the voltage check. Troubles should be eliminated with the aircraft electric mains de-energized.

The inspection and trouble eliminating procedure over, report the electric equipment readiness for operation and termination of the operations to the aircraft technician and the special equipment technician.

Checking Instruments for Serviceability

1. Turn on the АЗС-2 circuit breaker and the cabin air temperature regulator on the circuit breaker control panel of the co-pilot.

[redacted]

50X1-HUM

2. Place the CABIN AIR SUPPLY TEMPERATURE (ТЕМПЕРАТУРА НАДДУВА КАБИН) selector switch mounted on the co-pilot's instrument panel to the HOT (ГОР) position. In this position the МРТ-1 actuator of the turbine-driven cooler should close the cooler and open the cabin air temperature regulator.

3. With the selector switch thrown to COLD (ХОЛ.), the electric actuator should operate in the reverse direction.

4. Set the change-over switch to the AUTOMATION (АВТОМАТ) position.

5. Set the cabin air temperature regulator thermostat scale of the first cabin to read 3 to 5°C lower than the ambient air temperature. In this position the МРТ-1 electric actuator should cut out the cabin air supply temperature regulator and engage the turbine-driven cooler.

6. Set the thermostat scale to read 3 to 5° above the ambient air temperature. In this position the МРТ-1 actuator should engage the cabin air supply temperature regulator and cut off the turbine-driven cooler.

7. The thermostat of the rear cabin will be checked with employment of the same procedure.

8. If the ambient air temperature does not permit to set the thermostat scale at a temperature higher or lower than the original one, it is necessary first to heat up or cool down the thermostat to a temperature of 19 - 23°, and then to carry out the check according to steps 4 - 7 above.

Due to the fact that the regulator check for meeting the Specifications requires bulky fixtures which are not in quantity production, it proves impossible to carry out the checks directly in the using unit. Therefore adequate operation of the temperature regulator will be judged upon by its satisfactory functioning to maintain the pre-assigned cabin air temperature in the course of the flight.

Automatic Cabin Air Temperature Regulator, Type РТВК-45

The regulator, type РТВК-45, is designed for automatically maintaining the pre-assigned air temperature in the pressurized aircraft cabin.

The regulator set includes:

- one thermostat, type ТРТВК-24;
- one electric actuator, type МРТ-1.

Basic Characteristics

1. Nominal voltage requirement	27.5 V
2. Temperature control range	16.5 to 26.5°C
3. Accuracy (no-response zone)	±1°C
4. Degree of feedback irregularity	4°C
5. Current requirement by МРТ-1 actuator	not over 1 A
6. Nominal shaft load of МРТ-1 actuator	120 kg/cm.
7. Rotation angle of МРТ-1 actuator output shaft	135° ± 3°
8. Time required for МРТ-1 actuator output shaft to turn through 135° ± 3°	not longer than 45 sec.
9. Operating duty of МРТ-1 actuator	intermittent
10. Resistance of МРТ-1 actuator potentiometer	400 ± 20 ohms

All the units of РТВК-45 are interchangeable.

PHOTOGRAPHIC EQUIPMENT

GENERAL

The photographic equipment carried by the aircraft includes:

- set of cameras АФА-33/50М , АФА-33/75М and АФА-33/100М intended for daytime photography of the ground targets;
- set of cameras НАФА-3с/50 or НАФА-6/50 for night time photography of the ground targets;
- camera ФАРМ-1 for photographing the screen of the cathode-ray tube of radar bomb sight РБП-4;
- automatic tilting mount АКАФУ-156Н for all daytime cameras;
- camera mount (frame НАФА) for night time cameras;
- camera hatch;
- camera hatch and tilting mount control panel.

Arrangement of the photographic equipment on the aircraft is shown in Fig.116.

The aircraft may carry only one of the aforementioned cameras (besides camera ФАРМ-1 which is never removed) and one camera mount.

The camera mounts (tilting mount АКАФУ and the frame) are installed on spring-loaded shock absorbers selected according to the camera weight. Furnished with the aircraft are shock absorbers coming in three variants to fit cameras АФА-33/100М , АФА-33/75М and НАФА-33/50М ; НАФА-3с/50 and НАФА-6/50.

The automatic tilting camera mount АКАФУ-156Н ensures two-strip vertical and oblique photography. In the case of two strip photography (AERIAL RECONNAISSANCE mode of operation), the camera mount departs from the vertical plane through 6°30' to both sides when carrying camera АФА-33/100М and through 8°30' when carrying camera АФА-33/75М.

Note: Camera АФА-33/50М is not employed on aircraft ТУ-16 with the AERIAL RECONNAISSANCE mode of operation because only part of the light rays of the camera vision field (34°) pass through the camera hatch hole.

During the oblique photography (BOMBING CONTROL mode of operation), the automatic tilting camera mount АКАФУ-156Н deflects against the flight through the angles of 0; 10; 15; 20 and 25°.

Aerial cameras for daytime photography can be operated at various altitudes depending on the scale of aerial survey.

Minimum survey altitude depends on the flight speed and is calculated by the formula:

$$H_{min.} = \frac{1}{360} EFV,$$

[redacted]

50X1-HUM

where: $H_{min.}$ - minimum altitude of flight in km.;
E - exposure time in seconds;
F - focal length of aerial camera in km.;
V - speed of flight in km/hr.

Specifications

Daytime Photography Cameras AΦA-33/M

1. Picture size	30x30 cm.
2. Number of pictures	190 to 195 pcs
3. Size of film to be threaded up	32x6000 cm.
4. Photography cycle time:	
at 15 to 25°C temperatures	not exceeding 2 sec.
at -60°C temperature	not exceeding 2.5 sec.
5. Power consumed	
at 15 to 25°C temperatures	up to 13.5 A
at -60°C temperature	up to 16 A
6. Focal length:	
camera AΦA-33/100M	100 cm.
camera AΦA-33/75M	75 cm.
camera AΦA-33/50M	50 cm.
7. Interframe space	10 to 25 mm
8. Camera controller intervals	2 to 60 sec.
9. Thermoregulator:	
engagement temperature	3 to 13°C
disengagement temperature	20 to 30°C
10. Camera controller ensures functioning of the camera upon keeping electric bomb release button ЭСБР pressed for 0.2 - 0.3 seconds	
11. Exposure time (expressed in fractions of second):	
cameras AΦA-33/50M and AΦA-33/75M	1/75; 1/150; 1/300
camera AΦA-33/100M	1/75; 1/125; 1/200

Camera HAΦA-3o/50

1. Focal length	50 cm.
2. Picture size	18x24 cm.
3. Number of pictures	approx.150 pcs
4. Shutter	louvre type
5. Exposure time (expressed in fractions of second)	1/25; 1/50; 1/100
6. Power consumed:	
at 10 to 30°C temperatures	12 A
at -60°C temperature	13.5 A
7. Photography cycle time	not exceeding 3 sec.
8. Shutter operation optical exposure	2 to 15 luxes of photocell

Camera HAΦA-6/50

1. Focal length	50 cm.
2. Picture size	18x24 cm.
3. Shutter	louvre type
4. Exposure time in fractions of second	1/25; 1/50; 1/100
5. Power consumed:	
at 10 to 30°C temperatures	12 A
at -60°C temperature	not exceeding 15 A
6. Photography cycle time	not exceeding 3 sec.
7. Camera operation temperature range	+50°C to -60°C
8. Shutter operation optical exposure	1 to 15 luxes of photocell

Camera ΦAPA-1

1. Focal length	100 mm
2. Picture size	13 cm.in dia. (13x18 cm. frame)
3. Film, perforated	
width	19 cm.
length	28.5 m.
4. Number of pictures taken without loading the film magazine	approx.200
5. Cycle of camera operation	alternative, depending on the antenna revolutions or sector scanning angle
6. Power consumed:	
with heater off	5.3 A
with heater on	15.6 A
7. Camera operation temperature range	+50°C to -60°C

Technical and Adjustment Data of Automatic Tilting Mount AKAΦУ-156H

1. Original position of the automatic tilting mount AKAΦУ is the vertical zero position of the aerial camera AΦA set within +0°30' to -1° tolerance.

2. The tolerance for the tilting angle should stay within: +0°30' to -1° for 6°30' and 8°30' tilting angles in the AERIAL RECONNAISSANCE mode of operation;
±0°30' for 0; 10; 15; 20; 25° tilting angles in the BOMBING CONTROL mode of operation.

3. In the zero position, the play of the automatic tilting mount should be within ±0°30' (without taking into account the play in the reduction unit of the electric mechanism MУΦ-2).

4. Time of changing the automatic tilting mount from one extreme position to the other:

in the AERIAL RECONNAISSANCE mode of operation - 0.9 to 1.5 sec.

[redacted]

in the BOMBING CONTROL mode of operation when tilting from 0 to 25° and from 25 to 0° - 1.9 to 3.5 sec.

5. Minimum permissible interval between exposures in the AERIAL RECONNAISSANCE mode of operation - 3 sec.

6. Current pulse sent by the contact-pulse mechanism of camera АФА should not last longer than 0.5 sec.

7. The automatic tilting mount АКАФУ must reliably operate at temperatures from +50°C to -60°C and relative humidity up to 98%, withstanding vibrations of 10 to 80 cycles.

8. Service life of the automatic tilting mount АКАФУ guaranteed covers 2 years including 21,000 cycles of operation (20,000 cycles in the AERIAL RECONNAISSANCE mode of operation and 1000 cycles in the BOMBING CONTROL mode of operation).

9. Current in the circuit of electric mechanisms МУФ-2 in the AERIAL RECONNAISSANCE and BOMBING CONTROL modes of operation with camera АФА installed in the automatic tilting mount АКАФУ should not exceed 10 A when the voltage applied is within 27 ± 2.7 V.

10. During the BOMBING CONTROL mode of operation, reverse movement limit switch must function at the moment when the frames moving from the lower position pass the zero by 1 to 1.5°.

11. The limit switch labelled STARTING FROM EXTREME POSITIONS (ТРОГАНИЕ ИЗ КРАЙНИХ ПОЛОЖЕНИЙ) must function in the zero position of the AERIAL RECONNAISSANCE mode of operation, keeping OFF all the time the frame remains in the extreme positions.

12. Accuracy of operation of the limit switches of all fixed positions for the tilting angles - ±0°30'

Technical and Adjustment Data of Mount (Frame НАФА) for Night Time Photography Cameras

1. The mount may accommodate either camera НАФА-3с/50 or camera НАФА-6/R

2. The mount (frame НАФА) is intended to change the camera tilting angle from 0 to 25° against the flight every 2°30'.

3. The camera is set at the required tilting angle on the ground.

4. Frame НАФА is fixed in the lower attachment sleeves of camera mount АКАФУ-156Н . The shock absorbers should be free of vertical play.

5. The inner frame of the camera mount (frame НАФА) must be fixed without play at all tilting angles of the camera.

6. The camera cables should not be in the way of the camera (frame НАФА) tilting irrespective of the angle.

Main Technical and Adjustment Data of Camera Hatch

1. The camera hatch doors are opened inside the fuselage with the aid of the remote-controlled mechanism УР-7М.

2. Strain of band pulls - 8 to 12 kg.

3. Door opening and closing time - 40 sec.

4. The current consumed by mechanism УР-7М should not exceed 8 A under the rated voltage.

5. Coat all friction parts of the camera hatch actuator with lubricant State Standard ГОСТ 3276-54 . There is no need to apply lubricant to the rails surface on which the doors and rod bearings move.

PREFLIGHT PREPARATION

Preflight preparation of the daytime photography cameras includes:

(1) checking of the camera hatch;
(2) installation of the automatic camera tilting mount АКАФУ;
(3) mounting of the camera and its preliminary checking;
(4) checking of the tilting mount operation;
(5) preparation of the cameras for surveying.

Preflight preparation of the night time photography camerus includes:

(1) installation of frame НАФА;
(2) installation of the night time photography cameras and their preliminary checking;
(3) preparation of the cameras for surveying.

Preflight preparation of camera ФАРА-1 includes:

(1) installation of camera ФАРМ-1;
(2) checking of the camera mechanism functioning;
(3) preparation of the camera for flight.

Preflight Preparation of Daytime Photography Cameras.

Checking of Camera Hatch

Check the camera hatch doors for proper closing and opening (Fig.117) by turning the switch mounted on the control panel (Fig.118) 2 - 3 times on and off. Having made sure the camera hatch functions properly, proceed to installing the automatic camera tilting mou. . АКАФУ or frame НАФА.

Installation of the Tilting Mount АКАФУ-156Н

When doing survey jobs with the aid of camera АФА-33/100М , install the tilting mount (Fig.119) with the shock absorbers, having on the cover marking А-1000 , on the upper row of the sleeves; in the case of cameras АФА-33/75М and АФА-33/50М , install the tilting mount with the shock absorbers, having on the cover marking Р-750 , on the lower row of sleeves. The tilting mount having been installed, tighten the shock absorber sleeves as far as they will go with the aid of union nuts 1.

Notes: 1. For installing the automatic tilting mount, remove the partition separating the nose leg well from the camera bay.
2. Install the tilting mount horizontal accurate within +0°30' to -1° with the aircraft in the line-of-flight position.

Set the crank of the mount tilting mechanism with the aid of locking screw 11 at 6°30' when camera АФА-33/100М is to be installed and at 8°30' when camera АФА-33/75 М is to be installed. Mount the bonding strips.

Camera Installation

To install the camera:

1. Release hinged clamps 7 (See Fig.119).

2. Bring the camera trunnions in the seats of the tilting mount АКАФУ and fix them with the aid of clamps.

Note: . The chamber portion must be brought to the position shown by the arrow marked on the film magazine (with the cardan shaft of the driving unit set right of the aircraft fore-and-aft axis).

[redacted]

3. Arrange the driving and delivery unit on plate 6 and connect it to the reducing gear on the chamber portion with the aid of cardan shaft 3. The shaft bends in this event should not exceed 25° at the hinge joints.

4. Use flexible hose 4 to connect the air blower volute chamber to the chamber portion pipe connection.

5. Actuate screws 2 to zero the automatic tilting mount АКАФУ accurate within $+0°30'$ to $-1°$.

6. Connect all the units with electric cables.

7. Mount camera controller КПУ-2 on the navigator's panel and join plug connectors to it.

Checking of Cameras АФА-33/100М, АФА-33/75М and АФА-33/50М Functioning

1. Take the levers all the way out of the chamber portion and remove the protective cover from the latter.

2. Set 5 - 7 sec. interval on the camera controller dial (Fig.120).

3. Press the green button START (ПУСК).

As the chamber portion of the driving and delivery unit operates, check the air delivery to the chamber portion, functioning of the shutter and the objective protective covers, and the illumination of the recording instruments at the moment of the shutter operation.

4. Arrange the film magazine loaded with the exposed waste film on the chamber portion and take the cover off the film magazine.

Press button START (ПУСК) on camera controller КПУ-2 As camera АФА operates, check the film for proper rewinding watching the indicating lamp labelled REWINDING (ПЕРЕМОТКА), the pressure plate for proper rising and lowering and the camera controller motor for proper operation. This done, deenergize the camera controller by pressing the STOP (ОСТАНОВ.) button.

5. Disconnect the cardan shaft from the chamber portion reducing gear and the reducing gear driving unit.

6. Connect the hand drive to the input shaft of the chamber portion reducing gear.

7. Slowly rotate the hand drive handle clockwise to check the functioning of the shutter (accompanied by a click).

8. Beginning with the moment the shutter starts functioning count the number of the hand drive handle revolutions up to the closing and opening moments of the protective covers.

9. Check the air pressure in the chamber seeing that it is at least 1X m of water.

The aerial camera is considered ready for employment on the aircraft if the check-up has proved positive.

Checking of Operation of Automatic Tilting Mount АКАФУ-156Н

During the BOMBING CONTROL (КОНТРОЛЬ БОМБОМЕТАНИЯ) mode of operation:

1. Set the continuous operation switch on camera controller КПУ-2 at OFF (ВЫКЛЮЧЕНО), the BOMBING CONTROL (КОНТРОЛЬ БОМБОМЕТАНИЯ) switch at INTERVAL (ИНТЕРВАЛ) and turn the setting dial at 5 - 7 second inter-exposure interval.

2. Set the mode-of-operation selector on the control board (See Fig.118) located on the navigator's panel at the BOMBING CONTROL (КОНТРОЛЬ БОМБОМЕТАНИЯ).

3. Press the START (ПУСК) button with the camera hatch closed and make sure the red indicating lamp labelled CURRENT ON (ТОК ВКЛЮЧЕН) goes on but the camera does not operate. The REWINDING (ПЕРЕМОТКА) lamp must be either ON or OFF depending on the position of the rewinding indicating contacts. Press the STOP (ОСТАНОВ.) button.

4. Open the camera hatch. To this end, set the switch on the control panel to the CAMERA HATCH OPENED (ФОТОЛЮК ОТКРЫТ) position and make certain that green indicating lamp 4 on the control panel glows when the camera hatch is fully opened.

5. Press the START (ПУСК) button again and make certain the camera operates at preset intervals every 5 to 7 seconds and the green indicating lamp marked REWINDING (ПЕРЕМОТКА) flickers. After making 4 to 6 exposures, disengage the camera controller by pressing the STOP (ОСТАНОВ.) button.

Note: If the ambient air temperature is below 15°C, cut in the heater switch on camera controller КПУ-2 at least 15 minutes before proceeding to the check-up.

6. Check the functioning of the camera tilting mount АКАФУ during the BOMBING CONTROL (КОНТРОЛЬ БОМБОМЕТАНИЯ) mode of operation as set at 0; 10; 15; 20; 25° tilting angles. For this purpose: bring angle-of-tilt selector 2 (See Fig.118) on the control panel to every angle setting, successively; then press button 6 and let go of it. Make sure the electric mechanism has operated, inner frame 10 (Fig.119) has turned around semi-axle 5 together with intermediate frame 8 to set the camera at the desired tilting angle, and yellow indicating lamp 5 on the control panel (See Fig.118) is on.

To return the automatic camera tilting mount АКАФУ to the original (zero) position, set angle-of-tilt selector 2 at 0° and press button 6. After a while, yellow indicating lamp 5 goes on to show the tilting mount has assumed its zero position.

7. If it is necessary to set the mount at a greater tilting angle (e.g. changing it from 15° to 20°), first return tilting mount АКАФУ to the zero position, wait till the yellow indicating lamp has gone on and only then bring the mount to the tilting angle required. There is no need to return the automatic tilting mount to the zero position should it become necessary to set it at a smaller tilting angle (e.g. changing it from 20° to 15°).

Checking of Tilting Mount АКАФУ-156Н in BOMBING CONTROL Mode of Operation (Actuated by Electric Bomb Release)

Prior to checking, make certain the bombing equipment circuit is absolutely faultless. Then:

1. Set the electric bomb release to drop single bombs.

2. Cut in the bomb release circuit breaker and the bomb release main switch; make sure all other switches, selectors and bombing equipment circuit breakers are OFF.

3. Bring the yellow index of the setting dial on the camera controller opposite 4-km. altitude. Tilt the mount through the required angle.

4. Press the START (ПУСК) button on camera controller КПУ-2 After that, the green indicating lamp labelled READY FOR BOMBING CONTROL (ГОТОВ К КОНТРОЛЮ БОМБОМЕТАНИЯ) and the red indicating lamp labelled CURRENT ON (ТОК ВКЛЮЧЕН) must go on.

5. Press button КСБ-49. After that, electric bomb release button

ВСБР-49 must operate, and the green indicating lamp on the camera controller goes off. In 20 seconds (i.e. 10 seconds before the "burst" of the bomb) this lamp should go on again to flicker in the course of 25 ± 2 seconds (the camera performs continuous survey).

The aforementioned period lapsed, the lamp should go off and then light up again (mechanism of camera controller КПУ-2 has come to the original position).

Note: If continuous photography is imperative, set switch 12 (See Fig.120) to CONTINUOUS PHOTOGRAPHY (НЕПРЕРЫВНАЯ РАБОТА), selector 13 to INTERVAL (ИНТЕРВАЛ), and adjust setting dial 7 to bring infinity symbol (∞) marked on the camera controller dial opposite the white triangular index. In that instance, the camera will function continuously until the STOP (ОСТАНОВ.) button on camera controller КПУ-2 is pressed. During 25-sec. period of continuous survey done in the BOMBING CONTROL (КОНТРОЛЬ БОМБОМЕТАНИЯ) mode of operation, the camera takes 11 - 13 pictures in all (5 - 6 pictures before the "bomb burst" and 6 - 7 pictures after it). The aerial camera cycle is repeated during the next "bomb run".

6. The surveying operations having been completed, return the automatic camera tilting mount АКАФУ to the zero position.

Checking of Automatic Tilting Mount АКАФУ-156Н in AERIAL RECONNAISSANCE Mode of Operation
(Two-Strip Photography)

1. Set the mode-of-operation selector on the control panel at AERIAL RECONNAISSANCE (РАЗВЕДКА) and make sure the camera mount has tilted through 6°30' or 8°30' sideward off the zero(original) position depending on the position of the locking bolt on the crank mechanism.

2. Set 5 - 7 sec. interval between the exposures on the camera controller dial, turn the continuous photography switch at OFF (ВЫКЛЮЧЕНО), and the BOMBING CONTROL (КОНТРОЛЬ БОМБОМЕТАНИЯ) switch, at INTERVAL (ИНТЕРВАЛ).

Note: When the automatic tilting mount АКАФУ is engaged in the AERIAL RECONNAISSANCE (РАЗВЕДКА) mode of operation, 2-sec. inter-exposure interval and CONTINUOUS SURVEY (НЕПРЕРЫВНО) mode of operation are not allowed.

3. Press the START (ПУСК) button on camera controller КПУ-2 . The camera starts functioning at preset intervals and the contact-pulse mechanism sends pulse of current to relay РП-2 . Make sure electric mechanism МУФ-2 intended to govern the camera operation has functioned to change the tilting mount to the opposite position. Watch the indicating lamp on the control panel to make certain the automatic tilting mount functions properly.

The normal operation of aerial camera АФА is shown by flickering of the green indicating lamp labelled REWINDING (ПЕРЕМОТКА) on the camera controller and by proper functioning of the exposure counter.

4. At the chosen mode of operation of the tilting mount, make a 8 to 10-exposure series and then disengage the camera controller.

5. During the AERIAL RECONNAISSANCE mode of operation, the tilting mount may be checked without the camera controller and camera АФА . The check-up is performed by pressing and releasing button 9 (See Fig.119) labelled CHECK UP OF TILTING OPERATION (ПРОВЕРКА РАБОТЫ КАЧАЛКИ) and arranged on the inner frame. The button is pressed to move the frame from one extreme position to the other where it stops. Upon pressing the button for the second time, the tilting mount comes back to its original position. As the tilting mount passes the zero position, respective cam closes the supply circuit of the indicating lamp on the control panel. The lamp flickers to indicate normal functioning of the automatic camera tilting mount during the AERIAL RECONNAISSANCE mode of operation.

Preparation of Aerial Cameras for Flight

1. Take the protective covers off the objective.
2. Wipe the objective using a special piece of cloth.
3. Install an appropriate light filter and set the required exposure.
4. Zero the exposure counters of the chamber portion and camera controller.
5. Mark on the film magazine panel the navigator's name, data and the aircraft number painted on its tail using a lead pencil, wind the aerial camera clock and synchronize it with the aircraft clock.
6. Load the film magazine with the film required for the survey mission. Perform the loading job in a special case (furnished with the aircraft) or in a special room. If the aerial film spool has a leader, the film may be loaded directly on the aircraft in daylight.

Prior to loading, carefully examine the film magazine, select a set of film spools to fit, mark the camera number on the spool flanges and load the magazine with these spools only.

7. Arrange the film-loaded magazine in its place, lock the latches and open the film magazine gate all the way out until four red marks are aligned.

Preflight Preparation of Cameras НАФА

Prior to mounting frame НАФА on the aircraft, check the operation of the camera hatch.

Installation of Frame НАФА

1. Remove the partition separating the nose leg well from the camera bay.
2. Set frame НАФА on the lower row of sleeves (Fig.121).

Bring frame НАФА horizontal accurate within ±15' using washers 234А50-1-8-16 placed between the shock absorbing roller and the shock absorber (with the aircraft in the line-of-flight position).

3. Coat all flexible joints with lubricant УНВМ State Standard ГОСТ 3276-54.
4. Set the bonding strips.

Mounting of Cameras НАФА

1. Unscrew the bolt wing nuts from the camera brackets.
2. Bring the bolts into the slots of the sliding frame and screw the wing nuts on.
3. Mount the camera controller, converter 1 and automatic release 28 (the two latter for camera НАФА-3с/50 only) on the dove-tails.
4. Connect all members of the camera for night photography with electric cables.

Checking Camera НАФА for Proper Operation

1. Open the camera hatch and check the interlocking microswitch for faultless closing.

[redacted]

2. Pull out the locking latches as far as they will go and remove the protective cover from the camera attachment frame.

3. Cut in the camera controller common switch (Fig.122) and press the CHECK-UP (ПРОВЕРКА) button 1 - 2 minutes later.

4. As the camera functions, check the operation of the shutter and exposure counter.

5. Discontinue the power supply and fit the magazine loaded with exposed waste film in the camera.

6. Remove the film magazine cover and open the gate.

7. Energise the camera, press the CHECK-UP (ПРОВЕРКА) button and as camera НАФА functions check the film rewinding, lowering and raising the pressure plate, going on and out of the REWINDING (ПЕРЕМОТКА) indicating lamp in the camera controller, glowing of the CURRENT ON (ТОК ВКЛЮЧЕН) and ILLUMINATION (ПОДСВЕТКА) lamps at the moment the button is pressed.

Checking Units of Camera НАФА for Timely Functioning during Operation Cycle

1. Press the button labelled CHECK-UP (ПРОВЕРКА) to check the shutter operation aurally.

2. Perform 8 - 10 successive cycles of the camera to check the film rewinding mechanism performance. The film rewinding should start after the pressure plate has gone up and and before the pressure plate has lowered all the way down.

Pay more than ordinary attention that the camera does not operate spontaneously without pressing the button.

3. Press the button marked CHECK-UP (ПРОВЕРКА) and keep it pressed to make sure the camera does not operate after the shutter has functioned.

The camera must perform one operation cycle upon releasing the button.

4. Disconnect the connector plug from the camera.

5. Unscrew the threaded plug and connect the camera crank to the input shaft.

6. Slowly rotate the camera crank in the direction indicated by the arrow and count the revolutions up to the moment the pressure plate starts moving upward (the number of the camera crank revolutions should keep within 42 to 10).

7. Engage the common switch, press the CHECK-UP (ПРОВЕРКА) button to perform 2 - 3 cycles and keep it pressed while turning-off the common switch; this done, release the button.

When, the common switch is turned off, the camera must function to bring the pressure plate all the way upward.

8. Close the gate and disconnect the connector plug from the camera.

The above operations performed, camera НАФА is considered ready for flight survey.

Preparation of Cameras НАФА

1. Take the protective cover off the camera blind.
2. Wipe the objective lens with a piece of flannelette.
3. Set the exposure time required.
4. Tilt the camera through the required angle.
5. Connect the camera to the aircraft mains.
6. Fill the magazine with the film.
7. Press the locking hooks and take the locking latches all the way out.
8. Mount the film magazine on the chamber portion and secure it with the aid of locking latches.

9. Open the gate all the way out.

10. Try the camera operation by snapping 2 - 3 shots.

Check the film for being properly rewound (by flickering of the indicating lamp on the camera controller) and the shutter for proper functioning (by watching the shutter from the objective side, or aurally by a click).

11. Check the heater of the camera controller for proper operation. For this purpose, cut in the heater switch and make sure the heater is operative.

12. Remove the cover of the automatic release AC and wipe the protective glass of the photocell (for camera НАФА-3с/50).

Preflight Preparation of Cameras ФАРА-1

Mounting of Camera ФАРА-1

Cameras ФАРА-1 (Fig.123) are furnished with sets and mounted on the plane by the aircraft works.

The installation Instructions for this camera are set forth should the necessity arise to substitute the camera or install it after maintenance.

To mount camera ФАРА-1:

1. Take middle-portion jacket 3 from the camera.

2. Take lower focusing ring 5 of the taper portion.

3. Carefully unscrew guiding pins 10 attached to the housing where the objective is secured.

4. Take out the upper focusing ring.

5. Take the nut and locknut from the bottom part of the chamber portion.

6. Install the chamber and taper portions of the camera on the camera mount and lock it with nuts.

7. Mount the focusing rings, guiding pins and middle-portion jacket in the reverse order.

8. Install the assembled camera mount on the aircraft between the radio operator's stand and the main control panel and secure it by means of quick-release locking studs 6.

9. Connect cathode-ray tube 1 to the camera middle portion jacket. Fit clamps 11 onto the shock-absorbing lugs of the cathode-ray tube instead of the shock absorbers with a view to attaching the tube to the frame posts. See that the indicator is set without misalignment and securely tightened by the jacket clamp. Pay attention that the jacket lugs closely adhere to the glass or to the light filter.

10. Set the bonding strips.

11. Set the spring braces and adjust the springs so that they are uniformly tightened.

12. Connect the electric cable parts.

13. Connect one of the branches of cable РА to the 27 ± 2.7 V D.C. source so that one pole of the branch should be periodically closed by hand thereby sending pulses to the cam relay.

14. Connect the fuse link of MAINS (СЕТЬ) cable to the camera controller.

15. Set the camera controller common switch to the lower position marked OFF (ОТКЛЮЧЕНО).

16. Zero the camera controller counter.

17. Set the sector scanning and circular scanning indicator switches to the position the branch of cable РА is connected to at the present moment.

18. Connect the supply plug to the 27 ± 2.7 V D.C. source.

19. Proceed to checking the aerial camera.

[redacted]

20. Connect the aerial camera and the camera controller by means of electric cables.

Checking the Camera Operation

1. Press the latch and shift it to make sure the drive loading axle sinks all the way down and then comes back to the original position.
2. Set the antenna multiple frequency control at interval 5 .
3. Change the gang switch to ON (ВКЛЮЧЕН) and make sure the red lamp on the camera controller and the digital drum illumination lamp are glowing.
4. Send pulses to the cam relay regularly closing the circuit. Make certain that after application of the first pulse the yellow lamp goes on to indicate that the shutter is opened, the second pulse showing that the film has been rewound.
5. Set the selector at O (ОДИНОЧНЫЙ)[x] and check the camera by pressing the single exposures button.
6. Discontinue the power supply and install the magazine loaded with exposed waste film on the chamber.
7. Take off the film magazine cover.
8. Check the mechanism functioning by turning the camera crank and watch the film rewinding process.
9. Cut in the gang switches and occasionally send pulses to the cam relay.

While the camera is operating, watch the camera controller for glowing of the green indicating lamp (film rewinding), of the yellow lamp (shutter opening) and for the raising and lowering of the pressure plate crosspiece. This check-up requires that the end of the lever keeping the pressure plate in the upper position should be pressed.

Checking Units of Camera ФАРА-1 for Timely Functioning during Operation Cycle

1. Open the side cover of the camera and take out electric motor МА-40А.
2. Insert the driving crank.
3. Remove the film magazine and the cover from the change speed gear box.
4. Slowly rotate the handle of the hand drive clockwise until the contacts of the recording instruments illumination system have closed, count the number of the revolutions up to the starting moment of the pressure plate rising.
5. Mount the film magazine loaded with exposed waste film on the chamber.
6. Take the cover off the film magazine. Turn the driving crank to actuate the mechanism. Be sure to manually disconnect the lever keeping the pressure pl in the upward position.

Starting from the moment the contacts of the recording instruments illumination system are closed, count the number of the driving crank revolutions up to (a) raising of the pressure plate, (b) termination of the film rewinding process, (c) initial point of the table lowering. The revolutions counted must correspond the Table coming under "Adjustment and Technical Data" of the Manual furnished with the camera.

Preparation of Camera ФАРА-1 for Flight

1. Open the side holes made in the jacket for cleaning the cathode-ray tube, open the shutter and fix the shutter opening lever in position with the aid of the pawl.

---

[x] Single exposures setting

2. Bring the ground object images yielded by the screen of the cathode-ray tube to their sharpest definition, place a diffusing glass on the flattening glass, focus the camera and bring the image to sharp focus adjusting the objective with the aid of the focusing rings.

Note: Place the diffusing glass on the flattening glass with the frosted surface facing downward.

3. After focusing, be sure to check if the rings are locked and uncage the shutter opening lever.
4. Load the magazine with the film.
5. Let go of the latch, draw the catch out and take the protective cover off the camera.
6. Install the film magazine and lock it with the catch.
7. Turn the actuator handle to make one or two operation cycles.
8. Set the antenna multiple frequency per exposure in accordance with the air survey mission.
9. Set the sector scanning and circular scanning selector to the required position.
10. Zero the counter drums.
11. Check the camera for proper functioning by taking 2 - 3 shots, make sure the film is being rewound watching the indicating lamp and the film rewinding mechanical indicator arranged on the film magazine. Follow the shutter opening by watching the indicating lamp.
12. Set the sensitivity potentiometer knob to fit the type of film loaded in the magazine.
13. Make sure the silica gel cells are available in the chamber.
14. Wind and set the clock.
15. Try the camera operation by taking two-three pictures.

POSTFLIGHT OPERATIONS

General

After taxiing the aircraft to the parking site, the photographic equipment technician must:

(1) Try the camera operation in the presence of the navigator by taking one or two pictures with the camera hatch opened. If the whole of the film has been exposed during the flight, the camera operation will be checked aurally.

(2) Ask the navigator about the operation of the photographic equipment in the air and fill in the standard form.

(3) Close the camera hatch and the gate, and take out the film magazine. It is PROHIBITED to close the gate with the film magazine pressure plate in the downward position.

(4) Put the protective cover on the camera.

(5) Protect the blind and the automatic release window (for НАФА-3с/50 camera) with the covers.

(6) Place the film magazine in its container, remove the automatic release of camera НАФА-3а/50 to be kept in dry premises.

(7) Unload the magazine and send the exposed film to be processed.

(8) Carry out thorough outer inspection and clean the photographic equipment of dust and fouling. While doing this, the technician should check:

- condition of the camera units and parts accessible without disassembly of the mechanisms;

[redacted]

attachment of the camera mounts to the aircraft members, and that of the cameras to the camera mounts; attachment of the camera controller and indicating lamps; attachment and condition of the camera hatch doors and camera hatch door actuating mechanism; condition and attachment of the electric cables to the camera, camera controller, etc.

<u>Note</u>: After high altitude flights, special attention should be paid to the aircraft optics.

(9) After examination of the camera, eliminate all the defects revealed during the flight and during the inspection.

(10) Load the film magazine with the film and install the former in the camera.

(11) Disconnect the cameras (with the exception of camera ΦAPA-1) from the aircraft mains, loosen the shutter spring, set the maximum exposure value, cap the camera objective with the cover and close the camera hatch doors.

Unloading Film Magazines of Day and Night Photography Cameras and Cameras ΦAPA-1

Unload the film magazine in the dark room or in a special cover.

To this end:

1. Place the film magazine on a clean table so that the actuating head stands to the right.
2. Turn off the light in the dark room.
3. Take off the film magazine cover and disengage the metering roller.
4. Press the film magazine locking mechanism lever and remove the spools from the container.
5. Rotating the idle gear, wind over two-three frames of the unexposed film and then cut the film off the take-up spool.
6. Take out the take-up spool.
7. Mark the date of aerial survey and the navigator's name on the end portion of the exposed film using a frame free from pictures.
8. Wrap the film-loaded spool in black paper and put it into the film can.
9. Mark on the can containing the exposed film the size, grade and sensitivity of the film, the date of unloading, return card number and the name of person responsible for unloading the film magazine.

Loading Film Magazines of Day and Night Photography Cameras

Load the film magazine in the dark room or in a special cover designed for the purpose.

In case the film is loaded in the dark room, it should be handled on a clean and dry table free of foreign objects.

Loading Procedure

1. Take the film magazine from the film magazine holder and place it on the table.
2. Prior to loading, open the film magazine cover. Load the film either by non-actinic light, or in complete darkness. If the film is provided with a leader, the loading may be done in diffused light, too.
3. Remove the film spool from the film can and fix it to the semi-axles so that the film should come toward the operator with the emulsion layer outside. Turn the movable semi-axle all the way in.
4. Make sure the spool freely rotates on the semi-axles playing but slightly.
5. Raise the film magazine mechanism and pass the film around the guiding roller so that it is arranged between the fillets. Then bring the film under the pressure plate and between the metering rollers having previously disconnected the latter by applying pressure to the draw-out clamp. Pass about 20 to 25 cm. length of film between the metering rollers.
6. Loop the film over the take-up spool fixed in place, pass it around the bobbin and insert the film end into the slot so that the film is arranged symmetrically relative to the spool flanges.
7. Rotating the idle gear counter-clockwise, transport approximately two frames seeing that the film is properly arranged relative to the flanges and keeping it against warping. Stop rotation as soon as the pressure plate has come to the upward position.
8. Replace the cover to the film magazine.

Loading the Film Magazine of ΦAPA-1 Camera

Load the film magazine with the film on the dry and clean table. Place the magazine so that its base rests on the table with the film rewinding mechanical indicator to the right. If the film spool is provided with a paper leader, the film magazine may be loaded in diffused light, too. In case no leader is available, the loading should be done in complete darkness.

Loading Procedure

1. Take the cover off the film magazine and then hand-press the centre of the pressure plate.
2. Turn the safety latches and draw the semi-axles out.
3. Insert the film-free take-up spool in the film magazine.
4. Insert the film-loaded supply spool.
5. If the leader of the film is not ready for threading, cut it with scissors at 45°. The leader should clear the spool and pass in the direction to the operator. Take up from the spool 30-40 cm. of the film and pass the threading end into the slot between the guiding roller and the edge of the light trap. Turn the film magazine over and place it between the metering roller and the light trap.
6. Again put the film magazine on the base, fix the leader to the take-up spool, make sure that the film is properly aligned and the metering roller perforation teeth have entered the film perforation holes.
7. Holding the supply spool, give the take-up spool two-three turns in. The taut film must closely adhere to the take-up spool.
8. Replace the cover to the film magazine according to the marks made on the film magazine housing. After that, securely lock the cover by means of the screw.
9. Place the film magazine in its jacket.

[redacted]

50X1-HUM

RADIO EQUIPMENT
BRIEF INFORMATION

The aircraft radio equipment includes radio communication, radio navigation and radar facilities.

The radio communication facilities include:

(a) aircraft interphone system СПУ-10;
(b) communication radio set 1-PCБ-70 with receiver УС-9;
(c) command radio set I-PCБ-70M with receiver УС-9ДМ;
(d) command ultra-short wave radio set PCИУ-3M with two receivers.

Arrangement of elements of the radio communication facilities is shown in Fig.12A.

The radio navigation facilities include:

(a) radio compasses APK-5 Nos 1 and 2;
(b) radio altimeters PB-17 and PB-2;
(c) course radio receiver KPП-6;
(d) glide-slope receiver ГРП-2;
(e) marker receiver MPП-48П;
(f) radio range finder СД-1.

The radar facilities include:

(a) airborne transponder CPO;
(b) radar bomb sight PБП-4;
(c) radar gun sight ПРС-1.

PREFLIGHT CHECK

CAUTION. 1. Before making a check take measures against shocks by H.V. current, prevent the equipment from being switched on by its own accord. Make so that men and foreign objects may not touch the radio set antennas.

2. Inspect the units, cables, antennas with the equipment deenergised. The aircraft and airfield power supplies must be switched on only upon permission of an electrician.

3. Before flight the aircraft crew members must make such checks of the radio equipment which do not require use of special ground simulators.

4. If the equipment is installed on the aircraft immediately before flight, it must be fully checked and adjusted by technical personnel[1/] before the crew members made a preflight check.

Radio Communication Equipment

1. Check the fastening and soundness of the antenna insulator and antennas of the command and communication radio sets on the fuselage.

2. Check the antenna fairleads and bonding jumpers for fastening and reliable connection; check the fastening, shock absorption and outward soundness of the radio sets and cables.

[1/] The equipment check technique is outlined in Section "Check of Live Radio Equipment".

3. Check the operation of selector switches, switches and control knobs of the radio communication equipment in the following scope:

(a) СПУ-10 - for two-way communication between all members of the crew in position NETWORK No.1 (СЕТЬ № 1) and NETWORK No.2 (СЕТЬ № 2) and for possibility of the output connection to the radio sets attached.

(b) The transmitters of the command and communication radio sets - by the indications of the check meters and for monitoring their own operation.

(c) The receivers of the communication and command radio sets - by listening through the operation of the radio sets over the working bands.

(d) The ultra-short wave radio set - for two-way communication with the airfield radio station or with the radio set of another aircraft on the working channels and by monitoring its own operation on the other channels.

The check made, place all the switches and other controls in the original position and switch off the equipment.

Radio Navigation Equipment

1. Check the fastening and soundness of the radio altimeters antennas, range finder and dome of the marker receiver antenna.

2. Check the fastening and connection of the antenna leads of the glide-slope receiver and radio compasses, external view and fastening of the pointer and light indicators.

3. Check the operation of the controls and the overall performance of the radio navigation equipment in the work positions of the crew members in the following scope:

(a) The radio range finder - for two-way communication with the airfield transponder on the working channel.

(b) Course and glide-slope receivers - for reception of signals from the respective ground radio beacons on the working channel.

(c) The marker receiver - for reception of signals from the simulator.

(d) Radio compasses - for reception of signals and indication of course bearings of the precision approach radars and broadcast stations.

(e) Low altitude meters - for deviation of altimeter ПРВ-46 pointer after switching on and over the bands.

(f) High altitude meters - by the pulses on the indicator screen and operation of the controls.

(g) Receiver-indicator unit - by the signals of the radio stations or simulator.

The check made, set all the switches and other controls to the initial position and switch off the equipment.

Radar Equipment

1. Check the fastening and soundness of the transponder antennas and the dome of the radar sight antenna.

2. Check the locking of the protective cover of button ARMED (ВЗРЫВ), condition of the inertia switch, external view and fastening of the light and pointer indicators.

3. Check the units and waveguides for hermetic sealing and then the functioning of

(a) the radar sight - by operation of the controls and by appearance of echo signals on the tube screens;

(b) the radar sighting station - by the control system and joint operation with the installation;

[redacted]

50X1-HUM

(c) the transponder - by operation of the controls.

Before flight insert the plug of the ARMED circuit into the fuse socket and withdraw it after the flight.

The check made, set all the switches and controls to the initial position and switch off the equipment.

POSTFLIGHT INSPECTION

Visual Inspection of Radio Equipment

The radio equipment should be inspected visually after the flight to determine whether the equipment is ready for operation in flight conditions and to locate possible troubles in separate units, bunched conductors, fastenings and shock absorbers.

The visual inspection of the radio equipment should be made in a definite order so that all the elements are subjected to inspection.

In doing this proceed as follows:

1. Set the equipment controls to the initial positions.
2. Check for evidence of the required seals and locking.
3. Make sure that all the connectors, cables, antennas and individual wires are connected and fastened properly.
4. Check for evidence of spare fuses.
5. Check whether the switches and controls are fastened properly.
6. Check for evidence of damage to units and cables.
7. Check the condition of the antennas, antenna leads and earthing wires as well as the soundness and cleanliness of the antenna insulators.
8. Clean the radio equipment of dust and dirt.
9. If some units are discovered to be spilled by oil, ice-covered or snow-bound, they should be removed from the aircraft and sent to the repair shop for checking.

CAUTION. If some elements of the radio equipment are repaired or replaced on the aircraft it is necessary to carefully check the quality of the mounting of the newly installed elements.

Access to Elements of Radio Equipment

The majority of elements of the radio equipment have open access for their inspection, removal or installation on the aircraft.

To reach the assemblies of the radio equipment, access to which requires removal of separate elements of the aircraft or near-by cables, pipes or separate units of the equipment, do as indicated in the respective sections.

Radio Communication Equipment

1. Check the fastening and soundness of the antennas and antenna insulators of the command and communication radio set.

2. Check the external view and fastening of the radio station units, interphone system and fairleads; completeness of valves, correct installation of fuzes inserted during flight; performance of the equipment and operation of the switches and knobs on the working places if the equipment was not used in flight or there are remarks on its functioning.

3. Check the operation of the controls and the performance of:

(a) The transmitters of the command and communication radio sets - by the indications of the check meters, monitoring their own transmission and by switching on the transmitters on the working places.

(b) The receivers of the command and communication radio sets - for reception of signals of radio stations over all bands and for monitoring the receiver operation on the working places.

(c) The ultra-short wave radio set - for establishment of two-way communication on all the channels with the airfield radio station and those of other aircraft from working place No.2 and for monitoring its own operation on other working places.

(d) Aircraft interphone systems - for establishment of communication between the working places, establishment of communication from the pilots seats with other working places by means of interphone system buttons and for monitoring their operation on each working place when the interphone system is switched by buttons or foot-operated switches.

Place all the switches and control knobs in the initial positions and switch off the equipment.

Radio Navigation Equipment

1. Check the fastening and soundness of the antennas of the radio altimeters, radio range finder, the dome of the marker receiver antennas, radio compass loops.

2. Check the external view and fastening of the units of the radio altimeters, radio range finder, radio range finder supply box, marker coarse and glide-slope receivers, radio compasses, their leads and points of connection to the antennas, light and pointer indicators.

3. Check the performance of the navigation equipment and operation of the switches and control knobs of:

(a) The radio range finder - by the simulator on all the channels.

(b) The marker receiver - by the simulator.

(c) Radio compasses - for reception of signals from precision approach radars and broadcast stations as well as by checking their course bearings over all the bands. Monitor the operation of the radio compasses from the working places.

4. Check the low altitude meter for deflection of the indicator pointer after it has been energized and when changing the bands.

5. Check the high altitude meter by the pulses on the indicator screen and the operation of the control knobs.

Radar Equipment

1. Make sure that the plug of the ARMED circuit is out of the fuze socket.

2. Check the soundness and fastening of the interrogator and transponder antennas and radar domes.

3. Check the external view and fastening of the radar units, light and pointer indicators; locking of the fuses of the ARMED button cover; completeness of spare fuses and valves; installation of the fuses inserted in flight.

4. Check the operation and soundness of the switches and control knobs of the radar equipment (make a check if the equipment was not used in flight and there are remarks on its operation) and performance of:

(a) The radar sight - by the operation of the control knobs and by the presentation of the echo signals on the indicator screen.

(b) The radar sighting station - by the control system and by the joint operation with the installation.

(c) The transponder - for operation of the controls and correctness of signals of the sound and light signalling systems.

The check made, set all the controls to the initial position and switch off the equipment.

[redacted]
50X1-HUM

CHECKING OF LIVE RADIO EQUIPMENT

CAUTION. Before attempting to check the live equipment eliminate all the troubles in the equipment and wiring revealed in flight. When checking the live equipment pay special attention to the functioning of the equipment that has failed in flight.

The check of the live radio equipment shall be made after the visual inspection in the scope and order prescribed by the respective sections of the present Instructions.

Prior to checking the live radio equipment proceed as follows:

1. Make sure that the power supplies required are switched on.

2. Make sure that the supply voltage of the aircraft mains is within the limits of 28.5 - 28 V for D.C. and 115±0.5 V, 400 c.p.s. for A.C.

3. Make sure that all the troubles revealed during previous inspections are remedied.

CAUTION. If radio range finder СП-1, course receiver КРП-Ф, glide-slope receiver ГРП-2 and marker receiver МРП-48П are checked on the airfield with the use of special truck carrying instruments КИИП-1,КИИП-3,КИРМ-Ф, ГИРМ-2 and МИП-48, this truck should be placed in front of the aircraft 2 to 5 m. away from it so that the left side of the truck faces the aircraft antennas of the ra o equipment to be checked. In this case, there must be no obstructions (ladders, men, part of the aircraft body, etc.) between the truck and antennas. When checking the marker receiver, place the truck in any spot, but external antenna МИП-48 (from the truck spares set) should be placed 0.5 to 2 m. from inboard antenna МРП-48П.

The radio equipment is checked by the instruments installed on the truck in essentially the same way as by individual instruments described below.

If suspicious results are obtained in the course of checking of any piece of radio equipment, it is necessary to take the required simulator from the truck and use it to check the performance of the equipment concerned.

Checking of Pumping System of Hermetically
Sealed Units of Radar Station РБП-4

To check the unit pumping system proceed as follows:

1. Disconnect tubes from the cross-piece near frame No.38, plug the end of the tube previously at unit P12 and build up an air pressure of 3 kg/sq.cm. in the pipeline.

2. Keep the system under the pressure for 30 min., air release being objectionable. The test made, assemble the system and seal the joints.

Interphone System СПУ-10
(feeder Н7200-26)

1. Energize transmitters 1-РСБ-70, 1-РСБ-70М and РСИУ-3М, adjust them for telephony and set at RECEPTION (НА ПРИЕМ).

Energize receivers УС-9ДМ ,УС-9,РСИУ-3М No.1 or No.2, АРК-5 Nos 1 and 2, tune them to well heard radio stations and set at maximum volume of reception.

Note: The order of energizing and tuning of stations 1-РСБ-70М,УС-9ДМ , РСИУ-3М, АРК-5 is outlined below.

2. Energize simultaneously the amplifiers of interphones Nos 1 and 2 by tumbler switches of circuit breaker АЗС-5:

INTERPHONE No. 1 (СПУ No. 1) and INTERPHONE SETS (АБОНЕНТСКИЕ АППАРАТЫ) on the circuit-breaker panel of the right pilot, INTERPHONE No. 2 on the circuit-breaker panel of the navigator, and switches INTERPHONE No. 1 and INTERPHONE No. 2 on the pilots' upper board.

3. Set the switches of the interphone sets (Fig.125) to positions NETWORK No. 1, NETWORK, turn the volume control fully clockwise (maximum volume) and check the operation of the interphone system adjusted for intercommunication through conversations from all the interphone sets. The speech transmitted must be loud, clear, without noticeable distortions.

4. Use meter ИВ-4 to measure the voltage of the useful signal at the output of amplifier No. 1 when it is loaded by six pairs of telephones ТА-4 and two pairs of throat microphone ЛА-5. The mean speech voltage should not be less than 40 V at the maximum gain (the gain control on the amplifier is turned fully clockwise) and not less than 20 V at the normal gain (the amplifier gain control stands against the white notch) (Fig.126).

5. Check the operation of the interphone system adjusted for conference call from all the interphone sets. For this purpose press button CONFERENCE CALL (ЦИРК. ВЫЗ) on the interphone set being checked. In this case, the voice of the caller from the set being checked must be heard in the remaining sets, whatever may be the position of the function switch, and the volume of the radio station receivers' reception must decrease materially.

6. Listen through the operation of receivers УС-9, УС-9ДМ, РСИУ-3М, АРК-5 No.1 and АРК-5 No. 2 from all the interphone sets setting the function switch on the set being checked successively in positions COM. RADIO SET (СВЗ/РС), COMMAND RADIO SET (КОМ/РС), USW RADIO SET (УКВ/РС), ADD. BOARD-АРК/1 (ДОП/ЩТ-АРК/1) and ADD. BOARD-АРК/2 (ДОП/ЩТ-АРК/2).

When monitoring any of these receivers it is allowed to slightly listen through the operation of the other receivers to which the position of the function switch being checked does not correspond. For instance, when monitoring receiver УС-9 (the function switch in position COM. RADIO SET) the operation of receivers АРК-5, РСИУ-3М, УС-9ДМ may be heard weakly. The noise voltage being not more than 0.1 V measured with the dead receiver to which the function switch position being checked has correspond).

7. Check the starting and modulation of the transmitters of the communication (1-РСБ-70), command (1-РСБ-70М) and ultra-short wave (РСИУ-3М) radio sets from all the interphone sets by depressing the interphone buttons and switches which serve to switch on the transmitters and throat microphone of the radio set (button RADIOS on the pilots' control wheels). In this case check the operation of all the buttons and switches of the interphones.

When the interphone button is not depressed the operation of the receiver (signals of the transmitting stations being picked up, atmospherics, etc.) must be heard in the telephones connected to the interphone set being checked.

When depressing the interphone button (on control wheel RADIOS) the receiver noise must cease, but instead in telephones must be heard the operation of the transmitters (monitoring) of the radio set to which corresponds the position of the function switch on the interphone set being checked. When checking transmitters 1-РСБ-70 and 1-РСБ-70М the pointer of the antenna current indicator on the front panel of the transmitter must deflect and swing in step with sounds transmitted through the throat microphones.

CAUTION. The transmitters of the radio sets must be started, modulated and monitored from the interphone sets:

1-РСБ-70 - from all the interphone sets, except those of the radio operator and gunner.

[redacted]

1-РСБ-70М - from all the interphone sets except that of the gunner.
РСИУ-3М - from all the interphone sets.
The operation of all the receivers must be monitored from interphone sets:
УС-9ДМ - from all the interphone sets except those of the radio operator and gunner.
УС-9 - from all the interphone sets except those of the gunner.
РСИУ-3М - from all the interphone sets.
АРК - 5 No. 1 and No.2 from the interphone sets of the pilots and navigator.

8. Check for possibility to change from external communication to internal from the interphone sets of the pilots. For this purpose set the switch of the interphone set at any position (except INTERPHONE) for instance at COMMAND RADIO SET and depress button INTERPHONE on the pilot's control wheel. In this case, the audio of the aircraft radio set receiver to which corresponds the selected position of the function switch must cease, the transmitter should not be modulated. The interphone set must change to intercommunication and operate in accordance with Point 3 of the present Section.

9. Set network switches on the interphone sets in position NETWORK No. 2 and check the operation of network No. 2 adjusted for intercommunication according to Point 3 of the present Section.

10. Switch off the receivers and transmitters of the radio sets.

Interphone System Trouble Chart

Trouble	Probable cause	Remedy
1	2	3
No audio through one of networks in interphone sets in position INTERPHONE.	(a) Faulty connecting wires (conductors 3 and 4 of connector) of amplifier in bunched wires	Remedy the fault
	(b) Poor contact in valve sockets	By inserting valves alternately find faulty contact and remedy it by bending socket jacks
	(c) Faulty one of amplifier valves	Check and replace faulty valve 6Н8С
	(d) Short in input or output circuits of amplifier	By isolating separate sections of network and interphone set in succession find trouble and remedy it
	(e) Discontinuity of input or output circuits of amplifier in connector or cable	Check cable conductors of right connector of amplifier, locate discontinuity and eliminate it
When depressing conference call button of one of interphone sets, conference call is not heard in other interphone sets	Conference call relay cannot be energized - faulty connecting wires (conductors 5 and 10 of 14-terminal connector)	Remedy fault
When depressing conference call button of one of remaining sets no call is heard	Relay of interphone set being called cannot be fed with 27 V (conductors 5 and 12 of 14-terminal connector)	Remedy fault
No audio is heard in one of interphone sets in all positions if function switch on interphone set	Discontinuity in telephone circuits in headgear or connecting cable running from set to headgear	Eliminate discontinuity of wires, replace faulty headgear

Command Radio Set 1-РСБ-70М

(feeder Н7200-24)

1. Switch on transmitter 1-РСБ-70М and receiver УС-9ДМ, for which purpose:
(a) Set circuit breaker АЗС-5 УС-9 on the circuit-breaker panel of the navigator to position ON (ВКЛЮЧЕНО).
(b) Set the function switch on the front panel of the radio set first to position TPHN (ТЛФ) and in 30 sec. to position TGPH (ТЛГ).
(c) Set switch APC-OFF-MFC (АРЧ-ВЫКЛ-РРЧ) located on the remote control panel of the receiver to position MFC (Fig.127).

2. Set the function switch of the interphone set of the right pilot to position COMMAND RADIO SET, turn knob LOUDER (ГРОМЧЕ) fully clockwise.
Connect a pair of earphones ТА-4 and throat microphones ЛА-5 to the interphone set.

3. Check the operation of receiver УС-9ДМ following procedure below:
(a) Match the tuning scale of the remote control panel with the receiver tuning, for which purpose turn knob TUNING on the remote control panel smoothly first counter-clockwise and then clockwise so that the tuning scale of the panel comes from one extreme position to the other.
(b) Place switch TPHN-TGPH (ТЛФ-ТЛГ) in position TPHN, turn the volume control fully clockwise and tune the receiver to the well-heard radio station on each wave band.

CAUTION: Knobs В, Г and Д of transmitter 1-РСБ-70М when tuning the receiver to the station whose frequency does not correspond to those fixed on the AFC channel of 1-РСБ-70М, should be placed in the position of the frequency of the transmitting radio station. In this case, the AFC channel switch of radio set 1-РСБ-70М must be shifted to the manual control position.

(c) Check the operation of the volume control; rotating knob VOLUME (ГРОМКОСТЬ) counter-clockwise must reduce the volume of the picked up signals. Volume should change continuously without crackling.
(d) Check the operation of buttons ANTENNA ADJUSTMENT (ПОДСТРОЙКА АНТЕННЫ). When depressing one of the buttons for a long time the volume of the picked up signals must vary periodically from maximum to minimum. When changing from one button to the other the nature of volume must alter, i.e., if volume increases in intervals between maximum and minimum upon depressing the first button, then it must decrease upon depressing the other, and vice versa.
(e) Check the receiver operation on telegraphy. For this purpose shift switch TPHN-TGPH to position TGPH; in this case, BEAT NOTE must be superimposed on the signals of the transmitting station.

[redacted]

When one of buttons BEAT NOTE (ТОН БИЕНИЙ) on the remote control panel of receiver УС-9ДМ is kept depressed for a long period, the beat frequency must change periodically. If when pressing the first button the beat frequency increases, then it must decrease when the second button is depressed, and vice versa.

(f) Check the operation of the crystal filter. For this purpose set switch CRYSTAL (КВАРЦ) to position ON (ВКЛЮЧЕНО). In this case, the volume of the signal being picked up and the noise level must decrease, the signal must be heard more distinctly, the turn angle of the tuning scale at which the picked up signals are heard must decrease appreciably.

(g) Check the operation of switch APC - OFF - MPC. When changing over from position MPC to position APC the signal intensity of powerful radio station must be reduced appreciably. The intensity of poorly audible signals should not decrease noticeably (at the same position of the volume control).

(h) Check the operation of the scale illumination rheostat on the control panel. When rotating knob ILLUMINATION (ОСВЕЩЕНИЕ) the brilliance of the scale lamp must change steplessly.

(i) Tune receiver УС-9ДМ to frequencies according to the Table of radio set tuning.

4. Check the operation of transmitter 1-РСБ-70М of the command radio set following the procedure set below:

(a) Tune the transmitter on extreme frequencies for each section of the stub antenna following the "Operating Instructions for Transmitting Radio Set" that comes with every transmitter. Intermediate frequencies should be checked when the necessity arises. Location of the transmitter control knobs is shown in Fig.128.

CAUTION. 1. Take precautions to prevent the antenna of radio set 1-РСБ-70М from being touched by the crew members and various objects (ladders, covers, etc.).

2. The continuous operation of the transmitter into the antenna should not last more than 5 min. after which a 10-min. interval is necessary.

3. In case of precise tuning of the transmitter the pointer of the antenna current indicator is allowed to overshoot slightly on certain frequencies of the band, provided the indicator readings do not exceed 4 - 6 divisions in position TUNING (НАСТРОЙКА).

4. Knob B is allowed to depart from the position indicated in the Table of tuning of "Operating Instructions for Radio Set 1-РСБ-70М", if the antenna current indicator pointer when set against the tabular data deflects from zero.

5. Knob Г is allowed to depart from the position indicated in the Table of tuning under the very same conditions, but by not more than 1 division.

(b) Check the operation of the automatic control system by changing over the channels from the transmitter remote control panel, having shifted switch LOCAL-REMOTE (МЕСТН.-ДИСТ.) on the front panel of the transmitter to position REMOTE (remote control of transmitter, Fig.129). Upon completion of the operating cycle of the automatic control system knobs А, Б, В, Г, Д on the front panel of the transmitter must automatically settle to the positions in which they were locked during tuning of the transmitter on the given channel.

CAUTION. Continuous operation of the automatic control system should not last more than 20 min. Every 20 min. of operation should be followed by 20-min interval.

(c) Check for evidence of modulation and monitoring on low frequency on any of the fixed channel. When depressing button RADIOS on the pilot's control wheel or the button on the remote control panel the transmitting station signals being picked up should not be audible at the output of receiver УС-9ДМ, but instead the operation of the own transmitter must be heard in the earphones; the pointer of the antenna current indicator on the transmitter front panel should oscillate in step with sounds transmitted through throat microphones.

(d) Check the keying relay of the transmitter (in ТЛГ, ТЛФ and МТЛФ) for proper operation during transmission of dashes and dots. In this case, it is necessary to see whether the transmission influences the operation of the receiver (disabling of the receiver, simultaneous audibility of the transmitting station and operation of the own transmitter, etc.).

(e) Check whether the transmitter of the command radio set can be operated by the telegraph key of the radio operator. For this purpose set the key switch to the respective position and press the key. In this case, a signal must be heard in the earphones which vanishes when the key is released.

Check the operation of the radio set with the switch on the key cover (Fig.1[illegible]) in position RECEPTION, SIMPLEX (ПРМ. СИМПЛ.). The transmitter in this case must be disconnected (rotary converter is switched off). Receiver УС-9 must operate without being off upon depressing of the interphone buttons and telegraph key. The stub antenna of the radio set must be connected to its full length, since the relays switching over the stub sections must be deenergized.

5. Energize transmitter 1-РСБ-70 and receiver УС-9 of the communication radio set, for which purpose proceed as follows:

(a) Close circuit breaker АЗС-50 РСБ-70 on the circuit-breaker panel of the second cabin.

(b) Set switch SIMPLEX-HALF-DUPLEX (СИМП.-ПОЛУД.) on the telegraph key panel to position HALF-DUPLEX.

(c) Set the function switch on the front panel of the transmitter to position ТЛФ and in 30 sec. to ТЛГ.

(d) Set switch APC-OFF-MPC on the front panel of receiver УС-9 to position MPC.

6. Check the operation of receiver УС-9 against Items 2, 3b, c, d, e, f, g, h of the present Section using the interphone set of the radio operator and the appropriate controls on the front panel of receiver УС-9 (Fig.131).

7. Check the operation of transmitter 1-РСБ-70 in accordance with the Operating Instructions of transmitter 1-РСБ-70 by using the controls located on the front panel of the transmitter.

8. Check the operation of the monitoring switch. In position ON (low-frequency monitoring) and with the button of the interphone set depressed the signals of the transmitting station should not be audible, but instead operation of the own transmitter must be heard in the earphones. In position OFF (high-frequency monitoring) with the interphone set button in the press-down condition operation of the own transmitter must be monitored only during the precise tuning of the receiver to the frequency of the transmitting station; if the receiver is slightly detuned from the transmitter frequency, the transmitter operation should not be heard.

Command Radio Set Trouble Chart

Trouble	Possible cause	Remedy
1	2	3
Transmitter on, pilot lamp fails to come on	Blown fuse 20 A (or disconnected circuit breaker AC3-10) in transmitter supply circuit	Replace fuse, cut in circuit breaker

[redacted]

1	2	3
Transmitter on, dynamotor fails to start	(a) Blown fuse 40 A (or cut off circuit breaker АЗС-30)	Replace fuse, cut in circuit breaker
	(b) Open contact of starting relay interlock under transmitter cover	Close interlock of upper cover
	(c) Tumbler on telegraph key panel in position RECEIVER-SIMPLEX	Set telegraph key to position HALF-DUPLEX TRANSMITTER-RECEIVER
No grid current	(a) Blown fuse for 0.5 A in 400-V circuit	Replace fuse
	(b) Faulty master oscillator valve (Г-837) or one of multiplier valves	Replace valves in succession
Fuse in 400-V circuit burns out	Puncture of conductor insulation in cable running from dynamotor to transmitter	Remedy cable fault
Fuse in 1150-V circuit burns out	Puncture of conductor No.10 in cable running from dynamotor to transmitter	Remedy cable fault
Transmitter on, pilot lamp fails to burn	(a) Wrongly set switch LOCAL-REMOTE on front panel of transmitter	Set switch LOCAL-REMOTE to respective position
	(b) Pilot lamp burned out	Replace lamp
Transmitter is on, dynamotor operates, meter does not indicate modulation	(a) Microphone switch is not set at CARBON (УГОЛЬНЫЙ)	Set microphone switch to CARBON
	(b) Defective valves 6Н9С, 12Ж8, Г-811	Replace valves 6Н9С, 12Ж8, Г-811 in succession
When radio set is operated on telegraphy, no note is heard in earphones	(a) Low-frequency monitoring is off	Set monitoring switch to ON
	(b) Monitoring control is off	Turn speech amplifier control fully clockwise
	(c) Faulty valve 6Н9С of tone generator	Replace valve 6Н9С
No anode current with transmitter on	(a) Blown fuse for 0.5 A in 750-V circuit	Replace fuse
	(b) Faulty valve ГУ-13	Replace valve
Dynamotor runs with transmitter operated on telephony	Closed circuit of telegraph key or interphone button	Check condition of key and button circuits and remedy fault

1	2	3
Transmitter cannot be tuned in one of bands: 4.8 to 9 Mc/s 9 to 13 Mc/s 1.3 to 18 Mc/s	Faulty relay PC shorting respective stub sections: 3-metre 1.5 -metre 0.75-metre	Replace faulty relay. When in flight switch transmitter to reserve wave in good band
No grid current on 7-12 band, but there is current on 1-6 bands	Faulty valve Г-1625 of 2nd multiplier (Л103)	Replace valve Г-1625 (Л 103)
No high-frequency oscillations	Faulty master oscillator valve ГУ-837(Л101)	Replace valve
Large anode and grid currents	(a) Excessive mains voltage	Check and adjust voltage of aircraft mains
	(b) Faulty power amplifier valve ГУ-13	Replace valve
Transmitter cannot be tuned, no antenna current	(a) Vacuum relay fails to operate	Replace vacuum relay
	(b) Faulty power amplifier valve ГУ-13	Replace faulty valve
	(c) Discontinued antenna circuit and lead	Correct antenna discontinuity, check contact resistances of antenna joints
No grid current, no beat note is heard at crystal points	Faulty valve Г-837 (Л 101)	Replace valve Г-837
No grid current, but beat note is heard	Faulty valve Г-1625 of 1st multiplier (Л 102)	Replace valve Г-1625 (Л102)
No modulation, monitoring is normal	One of valves Г-811 (Л105 or Л106) is faulty	Replace valve Г-811 in succession
Monitoring is weak or absent at all	Faulty valve 12Ж8 (Л202) or 6Ж5С (Л203)	Replace faulty valves
No tone modulation in positions MTLG and TLPH, there is voice modulation. 1000 c.p.s. note is not heard at monitoring output	Faulty valve 6Н9С (Л303).	Replace faulty valve 6Н9С
No beat note of "crystal points" is heard during calibration	(a) Faulty valve 6Н9С (Л301) or 6А7 (Л302)	Replace valves 6Н9С, 6А7 in succession
	(b) Faulty crystal	Replace crystal

[redacted]

Radio Set PCHY-3M

(feeder H7200-25)

1. Energize radio set PCHY-3M for which purpose cut in circuit breaker АЗС-5 of the radio set on the circuit-breaker panel of the navigator and common switch 2ПП-250 on the motor-panel of the left pilot.

2. Place the function switches of the pilots' interphone sets in position USW RADIO SET, turn the volume controls of the interphone sets fully clockwise.

3. Place switches 1-2 on the radio set control panels in position 2 (Fig.132).

4. Give the operational check on the first receiver for which purpose:

(a) Turn the volume control on the panel of the first receiver fully clockwise (position Г-LOUDER) whilst on the panel of the second receiver fully counter-clockwise.

(b) Check the correct operation of the automatic control mechanism by pressing in succession communication channel buttons 1 , 2 , 3 and 4 on the control panel of the transmitter and the first receiver of radio set PCHY-3M.

(c) Listen to the receiver operation on all the channels through interphone sets. With button RADIOS depressed, the receiver noise and atmospheric interference must be heard in the earphones.

(d) Check the operation of the volume control of the control panel. Rotating the volume control counter-clockwise reduces the noise volume in the earphones.

5. Check for evidence of modulation and monitoring of the transmitter on all the channels. In doing this proceed as follows:

(a) Press button RADIOS on the pilot's control wheel. In this case, atmospheric noise should not be heard in the earphones.

(b) Say a few words abruptly through throat microphones which must be heard in the earphones with the button depressed, and disappear with the button released. The speech transmission must be loud without noticeable distortions.

6. Give the operational check on the second receiver for which purpose:

(a) turn the volume control on the control panel of the second receiver fully clockwise (position Г-LOUDER) and on the panel of the first receiver fully counter-clockwise.

(b) check the operation of the second receiver according to Points 4 b, c, d of the present Section.

7. Check the operation of radio set PCHY-3M on all the channels for two-way communication with two airfield (or aircraft) radio stations simultaneously operating on various channels. In doing this proceed as follows:

(a) Listen to the operation of the airfield transmitters on the corresponding receivers of the aircraft radio set being tested having set switches 1-2 on the control panels to position 2, and volume controls fully clockwise (maximum volume). In this case, operation of both transmitters must be heard in the earphones.

Rotating the volume control on the panel of one of the receivers will somewhat change (noticeably by ear) the volume of the other receiver operation. The transmission of ground transmitters must be heard well without noticeable distortions.

(b) Simultaneously check the operation of the transmitter of the station under test by monitoring its operation on the receiver of the airfield station. The transmission must be loud, without noticeable distortions; speech intelligibility must be not less than 100 per cent.

ATTENTION! 1. When setting switches 1-2 on the radio set control panel to position 1 operation of the first receiver must be heard in the earphones.

2. Check (if necessary) the operation of the sensitivity control and noise limiter of the receiver. Rotating the sensitivity control clockwise will increase the volume of signal (noise) at the receiver output.

When setting the noise limiter to the ON position, and the sensitivity control for maximum volume (fully clockwise) the noise at the receiver output should disappear.

3. Check the tuning of the transmitter and receivers of the radio set against test instrument Н (Fig.133) or КСР-1 (Fig.134), the radio set operation for two-way communication with the airfield radio station on all four channels when the engines are running. Tune the radio set, if necessary. Location of the controls of radio set PCHV-3M is shown in Fig. 135 and 136.

4. Switch on the radio set intermittently: 2 min. for transmission; 2 min. for reception. The radio set is allowed to continuously operate on transmission not more than 15 min.

Radio Set Trouble Chart

Trouble	Possible cause	Remedy
1	2	3
All receiver and transmitter valves are not heated	Broken wires in heater circuits of valves	Identify cable wires from rectifier to receiver. Remedy wire fault
No modulation and monitoring of own operation	Faulty throat microphones. Throat microphones are not supplied because of broken leads	Replace faulty throat microphones. Remedy faulty leads
1st knob of transmitter cannot be tuned by unit Н	Channel is not selected, faulty crystal. Faulty one of valves: Л 101, Л102, Л154, Л155, Л103	Press button of corresponding channel. Replace faulty crystal and valves
Power amplifier cannot be tuned by unit Н	Broken high-voltage circuit. Faulty output valve ГУ-32	Correct wire fault. Replace defective valve
No tuning indications on unit Н in position ANTENNA (АНТЕН-НА)	Defective valve 6Ж3П	Replace defective valve
Pointer of unit Н overshoots in position ANTENNA	Discontinued antenna circuit	Eliminate discontinuity
Automatic control devices cannot be operated from buttons on unit Н	Wrong connected plugs Ф-106 and Ф-206	Connect plugs according to markings
On pressing button on unit Н automatic devices operate continuously	Automatic devices reset button on panel is not depressed	Depress reset button on panel

[redacted]

50X1-HUM

Radio Set PCHY-3M

(feeder H7200-25)

1. Energize radio set PCHY-3M for which purpose cut in circuit breaker A3C-5 of the radio set on the circuit-breaker panel of the navigator and common switch 2ПП-250 on the motor-panel of the left pilot.

2. Place the function switches of the pilots' interphone sets in position USW RADIO SET, turn the volume controls of the interphone sets fully clockwise.

3. Place switches 1-2 on the radio set control panels in position 2 (Fig.1Ε.

4. Give the operational check on the first receiver for which purpose:

(a) Turn the volume control on the panel of the first receiver fully clockwise (position Г-LOUDER) whilst on the panel of the second receiver fully counter-clockwise.

(b) Check the correct operation of the automatic control mechanism by pressing in succession communication channel buttons 1 , 2 , 3 and 4 on the control panel of the transmitter and the first receiver of radio set PCHY-3M.

(c) Listen to the receiver operation on all the channels through interphone sets. With button RADIOS depressed, the receiver noise and atmospheric interference must be heard in the earphones.

(d) Check the operation of the volume control of the control panel. Rotating the volume control counter-clockwise reduces the noise volume in the earphones.

5. Check for evidence of modulation and monitoring of the transmitter on all the channels. In doing this proceed as follows:

(a) Press button RADIOS on the pilot's control wheel. In this case, atmospheric noise should not be heard in the earphones.

(b) Say a few words abruptly through throat microphones which must be heard in the earphones with the button depressed, and disappear with the button released. The speech transmission must be loud without noticeable distortions.

6, Give the operational check on the second receiver for which purpose:

(a) turn the volume control on the control panel of the second receiver fully clockwise (position Г-LOUDER) and on the panel of the first receiver fully counter-clockwise.

(b) check the operation of the second receiver according to Points 4 b, c, d of the present Section.

7. Check the operation of radio set PCHY-3M on all the channels for two-way communication with two airfield (or aircraft) radio stations simultaneously operating on various channels. In doing this proceed as follows:

(a) Listen to the operation of the airfield transmitters on the corresponding receivers of the aircraft radio set being tested having set switches 1-2 on the control panels to position 2, and volume controls fully clockwise (maximum volume). In this case, operation of both transmitters must be heard in the earphones.

Rotating the volume control on the panel of one of the receivers will somewhat change (noticeably by ear) the volume of the other receiver operation. The transmission of ground transmitters must be heard well without noticeable distortions.

(b) Simultaneously check the operation of the transmitter of the station under test by monitoring its operation on the receiver of the airfield station. The transmission must be loud, without noticeable distortions; speech intelligibility must be not less than 100 per cent.

ATTENTION! 1. When setting switches 1-2 on the radio set control panel to position 1 operation of the first receiver must be heard in the earphones.

2. Check (if necessary) the operation of the sensitivity control and noise limiter of the receiver. Rotating the sensitivity control clockwise will increase the volume of signal (noise) at the receiver output.

When setting the noise limiter to the ON position, and the sensitivity control for maximum volume (fully clockwise) the noise at the receiver output should disappear.

3. Check the tuning of the transmitter and receivers of the radio set against test instrument H (Fig.133) or KCP-1 (Fig.134), the radio set operation for two-way communication with the airfield radio station on all four channels when the engines are running. Tune the radio set, if necessary. Location of the controls of radio set PCHY-3M is shown in Fig. 135 and 136.

4. Switch on the radio set intermittently: 2 min. for transmission, 2 min. for reception. The radio set is allowed to continuously operate on transmission not more than 15 min.

Radio Set Trouble Chart

Trouble	Possible cause	Remedy
1	2	3
All receiver and transmitter valves are not heated	Broken wires in heater circuits of valves	Identify cable wires from rectifier to receiver. Remedy wire fault
No modulation and monitoring of own operation	Faulty throat microphones. Throat microphones are not supplied because of broken leads	Replace faulty throat microphones. Remedy faulty leads
1st knob of transmitter cannot be tuned by unit M	Channel is not selected, faulty crystal. Faulty one of valves: Л 101, Л102, Л154, Л155, Л103	Press button of corresponding channel. Replace faulty crystal and valves
Power amplifier cannot be tuned by unit H	Broken high-voltage circuit. Faulty output valve ГУ-32	Correct wire fault. Replace defective valve
No tuning indications on unit H in position ANTENNA (АНТЕН-НА)	Defective valve 6Ж3П	Replace defective valve
Pointer of unit M overshoots in position ANTENNA	Discontinued antenna circuit	Eliminate discontinuity
Automatic control devices cannot be operated from buttons on unit M	Wrong connected plugs Ф-I06 and Ф-206	Connect plugs according to markings
On pressing button on unit M automatic devices operate continuously	Automatic devices reset button on panel is not depressed	Depress reset button on panel

[redacted]

50X1-HUM

1	2	3
1st knob of receiver cannot be tuned by unit М	Defective crystal. Defective crystal oscillator or multiplier valve	Replace defective crystal or valve
2nd knob of receiver cannot be tuned by unit М	Defective indicating lamp 6x6C	Replace defective lamp
Receiver sensitivity below rated	Defective one of I-F amplifier valves. Sensitivity control is not set at maximum	Set sensitivity control at maximum. Replace defective valves
No signal applied	Defective valve 6П2. Break in telephone circuit	Replace defective valve. Eliminate break
Receiver valves are not heated	Broken conductors in cables (2 or 3)	Eliminate trouble
Crackling in earphones in one of receivers operating on reception or periodical fading of picked up signals during flight. Operates normally on ground	Hidden loose contact in circuit of antenna feeder. Disturbed soldered joint in high-frequency connector	Restore contacts in connectors. Eliminate breaks in feeder.

Radio Compasses APK-5 Nos 1 and 2

(feeder H7200-23)

1. Close the circuit breaker of radio compass No. 1 on the navigator's left-hand circuit-breaker panel.

2. Set the control knobs of the interphone set and additional interphone panel of the navigator to position "LOUDER ADD. PANEL" (APK No. 1). Connect telephones TA-4 to the set.

3. Energize radio compass APK-5, for which purpose turn control VOLUME (ГРОМКОСТ on the control panel of radio compass APK-5 No. 1 of the navigator fully clockwise and set the function switch to position COMPASS (КОМП.). In this case a green lamp must light up on the control panel, a characteristic noise of the receiver must be heard in the earphones, the tuning indicator pointer must deflect from the extreme right to the extreme left position (scale zero). The course indicator pointers must start moving. With no reception of signals from radio stations check the position of the tuning indicator pointer. If the latter rests on the left stop of the scale use a screwdriver to set the sensitivity control of the indicator on the control panel to such a position at which the pointer will leave the stop and settle against the first division of the scale. Location of the controls on the remote control panel is shown in Fig.137.

<u>CAUTION</u>: If the green lamp on the control panel fails to light up upon energizing the radio compass, press and release button CONTROL (УПРАВЛЕНИЕ).

4. Operate knob TUNING to tune to a few radio stations in each of the three bands. With fine tuning to a well heard radio station the tuning indicator pointer must deflect to the right, and pointers of course indicators (pointer No. 1 on УГДБ-1) must occupy a definite position, i.e. indicate the course bearing of the transmitting station. The course indicators are shown in Figs 138 and 139.

When rotating knob VOLUME the volume of the signals being picked up should not change. The tuning indicator pointer should remain in place oscillating about the main position in step with the signals of the transmitting station.

Check the operation of switch TPHH-TGPH in position TGPH, in the presence of a signal of the transmitting station (carrier frequency) note of about 800 c.p.s. frequency must be heard in the earphones.

5. Repeat the operation indicated in Point 4 when setting the function switch on the control panel to positions ANTENNA and LOOP (РАМКА). In this case the course indicators should not respond to the signals of the transmitting stations being received. The volume of signals in the earphones and position of the tuning indicator pointer must change in step with rotation of knob VOLUME.

6. Set the function switch to position LOOP, press knob LOOP towards the face of the panel and move it to the right (position П). In this case, the pointers of the course indicators must rotate clockwise. Move knob LOOP to position Л – the pointers of the course indicators must rotate counter-clockwise. The speed of the pointer rotation in both directions – 20 to 45° per second. If knob LOOP is moved to the right or left without being pressed, the pointers of the course indicators must rotate slowly at a speed of 1 to 8° per second; the pointer rotation must be smooth and jumpless.

Make sure that there is no seizing of the course indicator and tuning indicator pointers.

7. Check the operation of the illumination rheostat. Rotating knob ILLUMINATION (ПОДСВЕТ) clockwise will increase illumination of the tuning scale and scale of the tuning indicator.

8. Do operation indicated in Points 2, 3, 4, 5, 6, 7 using the control panel of the first radio compass and the interphone set of the left pilot. When changing over the control press and release button CONTROL on the control panel APK-5 No. 1 of the left pilot. Check the operation of course indicator БСУП-1 on the instrument panel of the left pilot.

<u>CAUTION</u>: 1. To check the second radio compass set the switch on the additional interphone panel to position APK-2. The second radio compass should be checked according to Points 2 , 3 , 4 , 5 , 6 , 7 of the present section. Check the output of the radio compass (APK-5 No.2) by pointer No.2 of course indicator УГДБ-1 of the navigator and by the pointer of indicator БСУП on the instrument panel of the right pilot.

2. On some aircraft when radar station РБП-4 is energised the supply blocking relay РП-2 of the second radio compass must disconnect 115 V, 400 c.p.s. from the radio compass.

3. Checking the first and second radio compasses on the aircraft positioned close to large metal structures, buildings or inside the hangar may result in unstable operation of the radio compasses (fading of the transmission being picked up, large difference in readings of APK-5 No.1 and No.2 when tuned to the same radio station, oscillation of pointers, etc.)

9. Adjust sensitivity of both radio compasses (No.1 and No.2). In doing this proceed as follows:

(a) Tune the radio compass to a frequency close to 50 c.p.s. free from the station noise.

(b) Disconnect the antenna from the receiver and bridge terminals ANTENNA and EARTH (ЗЕМЛЯ).

(c) Turn the volume control on the control panel of the radio compass fully clockwise.

(d) Set the gain control marked RECEIVER GAIN (УСИЛ. ПРМ) on the front panel of the radio compass so that the set noise voltage at the output of the radio compass is 20 V. Disconnect terminals ANTENNA and EARTH. Connect the antenna in place.

The front panel of the radio compass receiver is shown in Fig.140.

[redacted]

Radio Compass Trouble Chart

Trouble	Probable cause	Remedy
1	2	3
No switching of operation modes and frequency band	Discontinued 27.5-V supply circuit; blown 27.5-V supply fuse	Restore connection, replac fuse
Upon energising radio compass pilot lamp fails to light up and receiver valves are not heated	Discontinued 115-V supply circuit; blown fuse in 115-V supply circuit	Replace fuse, restore com- nection of wires. Check change over contacts in relay box.
After tuning indicator has been cut in its pointer does not deflect	(a) Open- or short-circuited wires running to tuning indicator (b) One of valves 6Б8С, 5Ц4М is defective	Restore connection or remov short circuit Replace defective valve
There is no noise in earphones on any band after switching on	(a) Open- or short-circuited wires of earphones (b) One of receiver valves is defective	Restore connection or elimi te short circuit Replace defective valve
There is noise, but no reception of radio station in earphones	(a) Open- or short-circuited antenna circuit (b) Defective valve in R.F. or I.F. amplifier stages	Restore connection or remov short circuit Replace defective valve
No tone modulation in TGPH condition	Broken wire running to tumbler switch TPHH-TGPH	Restore connection
Continuous rotation of band switching motor when set at 2nd band	Short circuit-to-earth fault of one of wires running to band switch	Eliminate short circuit
Inoperative manual control of loop rotation	Fault in loop rotation reversal circuits	Restore connection
Loop rotates, pointers of course indicators are motionless or move only within one sector of scale	Break in one of wires connecting fixed windings of selsyns; wrong connection of selsyn windings	Restore connection of wire according to feeder diagra
In position LOOP there is noise in earphones, but no reception or signal in any position of loop	(a) Defective feeder of loop (b) Defective valve 6K7(1) or 6H7 (Л3)	Remedy feeder fault Replace defective valve
In position COMPASS (КОМПАС) course indicator pointers rotate rapidly in one direction	One of valves (6П3С) is defective	Replace defective valve

1	2	3
In position COMPASS low-frequency tone of local modulation is not heard in earphones. Loop cannot be set in bearing position	(a) Defective valve 6H7 (Л2), 6K7 (Л1) or 6H7 (Л3) (b) Broken wires in loop feeder	Replace defective valve Restore connection
Picked up signals are heard in earphones, loop cannot be set in bearing position, local modulation tone is heard. Loop rotates slowly in one direction	Defective valve 6Б8С (Л10) of compass output amplifier	Replace defective valve
Same, but loop is motionless	Defective valve 6П3С (Л13)	Replace defective valve

Marker Receiver МРП-48

(feeder Н7200-23)

1. Close circuit breaker АЗС-2 of the first radio compass on the left circuit-
breaker panel of the navigator.
2. Cut in radio compass АРК-5 No.1 and make sure that it is in operable condition
by superheterodyne noise in the earphones and by the deflection of the tuning indicator.
3. Connect the antenna to the simulator of marker beacon ИМП-48 (Fig.141); install
ИМП-48 near the aircraft 0.5 to 2 m. away from the antenna of the marker receiver
so that the simulator antenna is in parallel with the aircraft axis.
4. Check whether the cover of the inboard antenna of the marker receiver (МРП-48)
is dirty. If it is, wipe the cover with a clean dry cloth or cloth moistened in
alcohol.

CAUTION. Never wipe the cover with oil-moistened rags.

5. Energise simulator МРП-48 by operating tumbler ON; approximately in 1 min.
the pointer of the simulator meter must deflect from its zero position.
6. Set the control knob of simulator ИМП-48 in the following positions:
(a) Switch MODULATION FREQUENCY (ЧАСТОТА МОДУЛЯЦИИ) in position 3000 c.p.s.
(b) Switch CRYSTAL-BAND (КВАРЦ-ДИАПАЗОН) in position BAND.
(c) Switch DOTS-CONTINUOUS (ТЧК-НЕПР) in position CONTINUOUS.
7. Tune simulator ИМП-48 to 75 Mc/s frequency by means of knob MARKER-FREQUENCY
SETTING (МАРКЕР-УСТАНОВКА ЧАСТОТЫ) against the diagram available on the front panel
of the simulator.

Upon coincidence of the tuning frequency of the simulator and marker receiver,
pilot lamps MARKER located on the instrument panels of the left and right pilots
must come on and the marker receiver bell installed on the port side must ring at a
time.

CAUTION. 1. With the receiver energised see that the MARKER lamp circuit is
not shorted, for this will result in the burning out of the current carrying
jumper between the contact and the armature of the relay inside the receiver.
2. If the frequency of the marker receiver is not equal to that of
the simulator (lamps are dark), tune the simulator to the receiver frequency
using knob MARKER - FREQUENCY SETTING.

[redacted]

8. Set switch DOT-CONTINUOUS on the simulator to position DOT. As a result pilot lamps MARKER on the instrument panels of the pilots should start flickering and the bell of the marker receiver should ring interruptedly in step with signals of the simulator.

CAUTION. If the lamps burn and the bell rings continuously, the simulator is allowed to be carried away from the aircraft to such a distance at which the bell will ring interruptedly in step with the signals from the simulator.

9. Do as instructed under Point 7 when setting switch MODULATION FREQUENCY to position 400 and 1300 c.p.s.

10. Check the frequency of the marker receiver by the crystal, for which purpose:

(a) Set switch CRYSTAL - BAND to position CRYSTAL.

(b) Connect the simulator antenna to radio-frequency connector entitled CRYSTAL ANTENNA (АНТЕННА КВАРЦА).

If the receiver frequency equals the crystal frequency of the simulator, pilot lamps MARKER must burn and the bell ring.

CAUTION. 1. If the receiver frequency differs from the crystal frequency, tune the receiver for which purpose:

(a) Plug a milliammeter (from the simulator spares or the like) into socket CHECK (КОНТРОЛЬ) on the front panel of the receiver.

(b) Use a screwdriver to rotate controls CIRCUIT I (КОНТ 1) and CIRCUIT II on the front panel of the marker receiver until the maximum deflection of the milliammeter pointer is obtained (Fig. 142).

2. If the receiver tuning does not yield positive results adjust the inboard antenna for which purpose:

(a) Remove the protective cap from the antenna tuning control (Fig.137).

(b) Unlock the antenna tuning control and set it by a screwdriver to such a position at which the deflection of the milliammeter pointer is at maximum.

(c) Lock the antenna tuning control and make sure that the antenna tuning is as it should be by the milliammeter readings.

(d) Put the cap of the control in place.

11. Deenergize the first radio compass and circuit breaker A30-2.

12. Check the operation of the marker receiver against Point 7 of the present Section when it is fed from the second radio compass for which purpose energize radio compass АРК-5 No.2 and make sure that it is in operable condition against Point 2 of the present Section.

13. Deenergize the second radio compass АРК-5.

14. Deenergize simulator МИП-48.

Marker Receiver Trouble Chart

Trouble	Probable cause	Remedy
1	2	3
On operation of receiver relay lamp MARKER fails to burn	Break in filament circuit of pilot lamp; break of flexible jumper of relay; no contact in lamp holder	Check supply circuit of lamp; eliminate trouble
No reception of signals from simulator or marker beacon	(a) Break in antenna circuit	Check antenna circuit and correct trouble
	(b) Poor contact in connectors of radio-frequency cable (dirt, loose point in connector)	Check cable and correct trouble
	(c) Detuned tuning circuits (CIRCUIT I or CIRCUIT II	Tune circuits as instructed under Section "Marker Receiver МРП-48П"
Variable sensitivity of receiver; pressing front panel changes relay current	Poor contact between front panel and cabinet of receiver	Tighten up screws on front panel of receiver, check rivets
Pick-up currents of relay do not comply with standards (0.4 and 0.6 mA)	Poorly adjusted relay	Adjust relay
Marker receiver does not operate	Anode voltage (220 V) is not supplied to valves from radio compass АРК-5	Check 220-V supply circuits of receiver (conductor No.2) in receiver connector. Eliminate trouble

Radio Altimeter PB-17

(feeder H7200-22)

CAUTION. The radio altimeter must be checked with radio altimeter PB-2 deenergized.

1. Energize radio altimeter PB-17 for which purpose turn on tumbler A30-2 ALTIMETER ANTENNA SWITCH (ПЕРЕКЛЮЧАТЕЛЬ АНТЕНН РАДИОВЫСОТОМЕРОВ) on the circuit-breaker panel of the left pilot and tumbler ON-OFF (ВКЛ-ВЫКЛ) on indicator PB-17. As a result, a red pilot lamp must light up on the indicator and, after the station has been warmed-up, the indicator screen should display the sweep ring. Indicator PB-17 is shown in Fig.144.

2. Check and adjust the sweep display on the indicator screen. In doing this proceed as follows:

(a) Set the range-scale selector on the indicator to position SCALE x10 (МАСШ.X10).

(b) Rotate knob RING SIZE (РАЗМЕР ОКРУЖНОСТИ) to match the sweep ring with the black ring of the scale on the indicator screen so that the sweep ring projects over its outer edge. The trace of the sweep ring must be bright, clear, with no interruptions and spots and have the correct form concentric to that of the scale.

If the brightness, centring and focusing of the sweep is insufficient, adjust them by rotating controls BRIGHTNESS (ЯРКОСТЬ), FOCUS (ФОКУС), HORIZONTAL CENTRING (ГОРИЗОНТАЛЬНАЯ ЦЕНТРОВКА) and VERTICAL CENTRING (ВЕРТИКАЛЬНАЯ ЦЕНТРОВКА) located at the lower side of the indicator with the help of an insulated screwdriver.

The indicator should be removed when making adjustment on it.

(c) Set knob GAIN (УСИЛЕНИЕ) on the indicator to such a position at which the initial pulse will be presented in the indicator near the zero mark of the scale. In this case the screen may display the grass (the clear sweep trace is blurred, its ends are fluttering);

Note: When varying gain from minimum to maximum the sweep form should not change in radius by more than ± 2 mm.

(d) Use knob DIRECT PULSE AMPLITUDE CONTROL (РЕГУЛ. АМПЛ. ПРЯМ. ИМП.) to adjust the pulse height equal to 6 mm and set it to the scale zero.

[redacted]

50X1-HUM

(e) Rotate knob ZERO ADJUSTMENT x10 (РЕГУЛ. НУЛЯ x10) to check whether the direct pulse can be moved along the scale. The pulse must move to the right and left of the scale zero at least 400 m., in this case the diameter of the sweep ring should not change by more than ± 4 mm.

(f) Check the value of change of the sweep ring form having placed range-scale selector in position SCALE x1 (МАСШ. x1). The radius of the ring form should not change by more than ± 2 mm.

If the ring changes by more than ± 2 mm, use control SCALE x1 CORRECTOR (КОРРЕКТОР МАСШ. x 1) on the upper panel of the indicator to adjust the sweep ring to normal sizes.

(g) Set the range-scale selector on the indicator to position SCALE x1 and check the quality of sweep in accordance with Points 2 b, c, d, e, f. In this case, rotating control ZERO ADJUSTMENT x1 will move the pulse to the right and left of the scale zero at least 40 m. The diameter of the sweep ring should not change by more than ± 2 mm.

Recheck the change of quality and form of the sweep ring when switching over range scales.

3. Check the antenna radiation for which purpose:

(a) Set the range-scale selector to position SCALE x1;

(b) Install power indicator И-1 on the transmitting antenna; the pilot lamp on indicator И-1 must burn;

(c) Disconnect the cable of the transmitting antenna from the transmitter and instead, connect the cable of the receiving antenna. Install indicator И-1 on the receiving antenna; the indicator pilot lamp must burn.

(d) Connect the cables in position.

4. Check the overall sensitivity of radio altimeter PB-17 for which purpose:

(a) Connect the radio altimeter to tester T-1 (Fig. 145) for a delay equivalent to 100-m. height according to the diagram in Fig. 146. Energize the radio altimeter and allow the valves to warm up (for 3 - 5 min.).

(b) Set the draw-out part of the attenuator to such a position at which the total attenuation of the tester (attenuator reading + attenuation of coils) may be 100 to 106 db.

(c) Set the range-scale selector to position SCALE x1.

(d) Set knob GAIN on the indicator to such a position at which noise appears on the outer edge of the sweep ring;

(e) Set knob DIRECT PULSE CONTROL (РЕГУЛИРОВКА ПРЯМОГО ИМПУЛЬСА) to a position corresponding to fading of the direct pulse on the indicator screen, and set knob GAIN as instructed under Point d.

(f) Set the attenuator slider to such a position at which the pulse delayed is 6 mm high (size of big mark) and determine the altimeter sensitivity which is the sum of the readings of the attenuator and attenuation of the tester coil. The sensitivity of radio altimeter PB-17 must be at least 106 db (allowing for attenuation inserted by antenna selector АП-1).

(g) Repeat the operations indicated in Points d, e, f when measuring sensitivity on range-scale SCALE x10.

5. Measure the radiation power of transmitter PB-17, doing this proceed as follows:

(a) Connect the radio altimiter to tester T-4 as shown in Fig.147.

(b) Energize the radio altimeter and allow the valves to warm-up.

(c) Set the switch of tester T-4 (Fig. 148) to position + A and adjust (if necessary) the aircraft mains voltage so that the anode voltage as measured by the tester meter is 305±5 V.

(d) Set the switch of tester T-4 at position POWER - FREQUENCY (МОЩНОСТЬ-ЧАСТОТА).

(e) Set output control A of the radio altimeter transmitter (Fig.149) to a position at which deflection of tester T-4 meter pointer is a maximum, not below the red line of the scale when the radio altimeter operates at SCALE x1 and not below the blue line at SCALE x10.

6. Deenergize the radio altimeter by switch ON - OFF on indicator PB-17 and switch АЗС-2 R. ALTIMETER ANTENNA SWITCH on the circuit-breaker panel of the left pilot.

Radio Altimeter Trouble Chart

Trouble	Probable cause	Remedy
1	2	3
Radio altimeter is not energised, pilot lamp fails to burn	(a) 115 V, 400 c.p.s. are not supplied to radio altimeter	Check 115 V, 400 c.p.s. wiring (conductors 11 and 12 in indicator connector). Remedy trouble
	(b) Blown fuse	Replace fuse
Fuse blows	(a) Shorted 115 V A.C. circuit	Check A.C. circuits (conductors 12 and 11 in indicator connector) Remedy trouble
	(b) Defective valve 5Ц3С	Replace valve
	(c) Shorted D.C. circuit (conductor 7 in junction cable)	Remedy trouble
Indicator does not present sweep on both range scales	Defective valve: Л13 or Л18, type 6Ж1П, or Л22, type 5Ц3С	Check valves; replace faulty ones
Short sweep radius	Low gain of valves Л13 and Л18, type 6Ж1П	Check valves and replace defective ones
Sweep is off centre	Maladjusted potentiometers K-222 and K-225 (centring)	Adjust potentiometers
Unsatisfactory brightness and focusing of presentation on indicator	(a) Maladjusted potentiometers R-57 and R-60	Adjust potentiometers R-57 and R-60
	(b) Defective cathode-ray tube	Replace tube
Sweep distortion	(a) Poor pin-socket contacts of C.R.T.	Make closer contact between C.R.T. pins and panel sockets
	(b) Defective C.R.T.	Replace tube
No presentation of pulse on indicator screen	(a) Defective valve: Л14, type 6Н1П or Л15, type 6Н1П	Check valves. Replace defective ones
	(b) Broken wires No. 4 in junction cable	Restore connection

[redacted]

50X1-HUM

1	2	3
Echo pulse decreases when direct pulse is suppressed by knob DIRECT PULSE CONTROL	Shield is not earthed in one of connectors of junction cable	Connect shield reliably with connector body
Insufficient suppression of direct pulse	Defective valve Л17, type 6Н15	Replace valve

Radio Altimeter PB-2 (Low-Altitude)

(feeder H7200-22)

1. Move foreign objects (ladders, trucks, etc.) capable of causing reading err away from the aircraft antennas PB-2.

2. Energize radio altimeter PB-2 for which purpose:

(a) Close circuit breaker A3C-5 of the radio altimeter and A3C-2 R. ALTIMETER ANTENNA SWITCH on the circuit-breaker panel of the left pilot.

(b) Turn knob ON on indicator ПРВ-46 fully clockwise (Fig.150).

3. Check the performance of the radio altimeter on the first and second bands f which purpose set knob BAND (ДИАПАЗОН) successively to positions 0-120 and 0-1200 m the scale of indicator ПРВ-46. 2 - 3 min. after the radio altimeter has been ene-gized the indicator pointer must come to stand against the scale zero mark. The pointer setting accuracy: ± 2 m. on the first band; on the second band the pointer deflection from the scale zero may reach 300 m.

4. Check the antenna and antenna feeders PB-2 for radiation. For this purpose mount indicator И-1 on the transmitting antenna; in this case the indicator lamp must burn.

Disconnect the feeder of the transmitting antenna from the transmitter-receiver and instead connect the receiving antenna feeder. Check the receiving antenna and feeder for radiation in the same way as the transmitting antenna. Connect the receiving and transmitting antennas to their sockets.

5. Deenergize the radio altimeter following Point 2 in the reverse order.

Checking Overall Sensitivity of Radio Altimeter PB-2

1. Connect the radio altimeter and tester T-1 as shown in Fig.151.

2. Set switch BAND on indicator ПРВ-46 to position 0-120 .

3. Energize the radio altimeter and allow the valves to warm up for 5 to 6 min.

4. Draw out slowly the movable part of the attenuator until the indicator (ПРВ-46) pointer deflects downwards by 7 m. from the initial reading. The attenuat reading must be at least 52 units (when using the tester coils with 28 db attenuati

Note: If, according to the tester Certificate, attenuation of the coils is 28 + n db, then the attenuator should read not less than 52 - n db.

5. Deenergize the radio altimeter

Calibration of Radio Altimeter PB-2

Within the range of low altitudes

1. Energize the radio altimeter.

2. Connect the radio altimeter with tester T-1 as shown in Fig.151. Set the attenuator at maximum coupling and lock it. Check the readings of the radio altim

at the end of the scale of indicator ПРВ-46 on the first band, for which purpose place the band switch located on the indicator in position 0-120 . In 5 - 6 min. the indicator pointer settles in the position corresponding to the equivalent altitude of tester T-1 (100 m.) (See Service Log of tester T-1) minus the aircraft residual altitude (12.5 m.); the reading accuracy of the radio altimeter must be at least ± 2 m., i.e. the indicator pointer must show the altitude

100 - 12.5 ± 2 = 85.5 - 89.5 m.

3. If the readings of indicator ПРВ-46 do not correspond to the data in Point 2, open cover CALIBRATION - HIGH - LOW ALTITUDES (КАЛИБРОВКА - БОЛЬШИЕ - МАЛЫЕ ВЫСОТЫ) and use a screwdriver to adjust control CALIBRATION - LOW ALTITUDES so that the indicator pointer shows the altitude according to Point 2 (average reading 87.5 m.).

4. Connect the radio altimeter to tester T-1 as shown in Fig. 152 and check the radio altimeter readings at the beginning of the indicator scale on the first band. In this case the indicator pointer must settle at the beginning of the scale in the position corresponding to the equivalent altitude of tester T-1 (20 m.) for the connection shown in Fig.152 (See Service Log of tester T-1) minus the residual altitude of the aircraft; the reading accuracy must be at least ± 2 mm, i.e.

20 - 12.5±2 = 5.5 - 9.5 m.

5. If the readings of indicator ПРВ-46 do not correspond to the data in Point 4, open cover ZERO ADJUSTMENT (УСТАНОВКА НУЛЯ) on the transmitter-receiver PB-2 and use a screwdriver to set control ZERO ADJUSTMENT - LOW ALTITUDES (УСТАНОВКА НУЛЯ-МАЛЫЕ ВЫСОТЫ) so that the indicator pointer shows the altitude according to Point 4 (average reading 7.5 m.).

6. Repeat operations indicated in Points 2, 3, 4 and 5 until the indicator pointer settles in both positions to within ±2 m.

Note: 1. Altitude equivalent (time delay) when connections are made as shown in Fig.151 corresponds to 100 m., and as in Fig. 152 to 20 m.
2. The residual altitude for mounting the radio altimeter on the aircraft equals 12.5 m.

Within the range of high altitudes

7. Connect the radio altimeter to tester T-1 as shown in Fig.151. Set the band switch on indicator ПРВ-46 to position 0-1200 and check the readings of the radio altimeter at the beginning of the scale on the second band. In this case, the indicator pointer must settle in position corresponding to the tester equivalent altitude (100 m.) (See Service Log of tester T-1) minus the residual altitude of the aircraft; the reading accuracy must be at least ± 20 m., i.e.

100 - 12.5 ± 20 = 67.5 - 107.5 m.

8. If the readings of indicator ПРВ-46 do not correspond to those in Point 7, use control ZERO ADJUSTMENT - HIGH ALTITUDES to set the pointer to a position corresponding to the altitude in Point 7 (average reading 90 m.).

9. Connect the radio altimeter to tester T-2 as shown in Fig.153 and check the accuracy of the radio altimeter readings at the end of the indicator scale on the second band. In this case, the indicator pointer must settle in a position corresponding to the tester equivalent altitude (500 m.) (See Service Log of tester T-2) minus the residual altitude of the aircraft; the reading accuracy must be at least ± 20 m., i.e.

500 - 12.5±20 = 467.5 - 507.5 m.

[redacted]

50X1-HUM

10. If the readings of indicator ПРВ-46 do not correspond to those in Point 9, use control CALIBRATION - HIGH ALTITUDES to set the pointer to a position corresponding to the altitude indicated in Point 9 (average reading 490 m.).

11. Repeat operations indicated in Points 7 - 10 until the indicator readings at the beginning and the end of the scale will correspond to the required altitudes within ± 20 m.

12. Deenergize radio altimeter PB-2.

Notes: 1. Equivalent altitude of tester T-2 equals 500 m.

2. Location of controls ZERO ADJUSTMENT and CALIBRATION on transmitter-receiver PB-2 is shown in Fig. 154.

Radio Altimeter Trouble Chart

Trouble	Possible cause	Remedy
1	2	3
On energizing radio altimeter, dynamotor fails to operate (armature does not rotate)	(a) Blown fuse in supply circuit of radio altimeter	Replace fuse
	(b) Break in supply circuits dynamotor relay (pin No. 1 in cable dynamotor - transmitter-receiver)	Remedy cable fault
	(c) Break in L.V. supply circuit of dynamotor (conductors 2 - 4 of dynamotor cable)	Remedy cable fault
	(d) No contact between brushes and commutator of dynamotor	Clean contacts or replace brushes (if necessary)
On energizing radio altimeter, pointer does not deflect from left limit	(a) Break in cable of H.V. circuit (conductors of dynamotor cable 3 - positive, 2 - negative	Remedy cable fault
	(b) Blown fuse	Replace fuse
When changing over to 2nd band indicator pointer remains motionless	Break of conductors 4 and 5 in indicator cable	Remedy cable fault
Dancing of indicator pointer - unstable readings	Dirty H.V. commutator in dynamotor	Clean commutator, make closer contact between commutator and brushes
Radio altimeter fails to ensure required sensitivity margin in altitude during flight	(a) Defective antenna feeders, not matching	Replace defective feeders and antenna. Check power of tester T-1 by indicator
	(b) Cracked steatite insulators of antenna	Replace antenna

Radio Range Finder СД-1

(feeder H7200-22)

CAUTION: During checking the supply voltage of the radio range finder must be within: 27.5 - 28 V D.C., 115 ± 0.5 V, 400 c.p.s. A.C.

Checking Performance of Radio Range Finder

Set knobs MODE OF OPERATION (РОД РАБОТ) and BAND on range indicator ПРД-50 located on the instrument panel of the left pilot to position КМ (range measurement) and 0-150 (second band).

Energize the range finder, for which purpose close circuit-breaker A30-2 RANGE FINDER (ДАЛЬНОМЕР) on the circuit-breaker panel of the navigator and set knob RANGE FINDER on remote control panel СД-1-3 of the left pilot to position 1 (first communication channel). In this case, pilot lamp ОН on control panel СД-1-3 must light up. Approximately 2 min. after energizing the indicator pointer must start smoothly to the end of the scale and swing smoothly within the range of the right portion of the scale (with no reception of reply signals from the transponder). Lamp CALL SIGNAL (ПОЗЫВНОЙ СИГНАЛ) on control panel СД-1-3 must burn continuously with slight variation of light intensity. The time of one complete swing of the indicator pointer (search time) during range measurements and orbiting must be within 1 and 1.8 sec.

Checking Performance of Time Selector

(calibration of range finder СД-1)

1. At least in 10 min. after range finder СД-1 has been energized, press knob ZERO ADJUSTMENT on control panel СД-1-3; the pointer of indicator ПРД-50 must come slowly to the scale zero. If the pointer fails to settle against zero turn knob ZERO ADJUSTMENT to adjust the pointer exactly to the scale zero mark.

2. Press knob ADJUSTMENT 30 - 150 km. on the control panel; the indicator pointer must come slowly to mark "30" on the first band or to mark "150" on the second band. If the indicator pointer fails to settle against the required mark of the scale, turn the knob to adjust the pointer exactly to mark "30" or "150").

Repeat operations under Points 1 and 2 until the indicator pointer settles exactly against the extreme marks of the scale "0 and 30" (or 150).

3. Set knob MODE OF OPERATION of the range indicator to position ORBITS (ОРБИТЫ). Press knob ORBIT SETTING (УСТАНОВКА ОРБИТ) on the control panel and rotate it so as to place it in such a position at which the indicator pointer comes to stand against the middle of the triangular mark of the scale.

Location of the range finder controls on control panel СД-1-3, and indicator ПРД-50 are shown in Figs 155 and 156.

CAUTION: When doing operations indicated in Points 1, 2, 3 (adjustment of indicator pointer to marks "0", "30" and "150") there must be control margin left, i.e. the control knobs should not reach their extreme positions.

4. Check the antenna of transmitter СД-1-2 for radiation of radio-frequency energy on the first, second and third channels. For this purpose bring a power-level indicator (from the complement of tester КИПД -1 and keep it in parallel alignment with the antenna (Fig.157) near the aircraft skin 15 cm. from the transmitting antenna.

In case of radiation the indicator neon lamp must glow.

[redacted]

50X1-HUM

Checking Radio Range Finder СД-1 by Testers

КИПД-1 and КИПД-3

1. Check the supply voltage of the range finder. For this purpose install tester КИПД-1 (Figs 158 and 159) on the aircraft and connect it to transmitter СД-1-2 by aid of a cable with T-joint (from the tester complement) as shown in Fig.160.

Connect converter МА-100 to 27.4–28 V supply taking into account its polarity.

CAUTION: Wrong connection of the converter to the supply source will result in a short circuit in the aircraft D.C. mains.

Energize the tester using the ON - OFF switch on the front panel of the tester.

Energize the range finder for which purpose set switch RANGE FINDER located on control panel СД-1-3 to position "1" (first communication channel).

Measure the D.C. supply voltage of the range finder. To do this, set switch SUPPLY VOLTAGE (НАПРЯЖЕНИЕ ПИТАНИЯ) of the tester to position "27 V" (27в). If the readings of the tester voltmeter come beyond 27.5 - 28 V, adjust the voltage of the aircraft mains (airfield supply) to the specified values.

Measure the A.C. voltage for which purpose set switch SUPPLY VOLTAGE to position "115 V, 400 c.p.s. " (115в , 400гц). If the voltmeter reads the value other than 115 V, adjust the voltage to 115 ± 0.5 V.

Measure the voltage in 250-V circuits. When doing this set switch SUPPLY VOLTAGE to position "250 V" (250в) and press button 250 V CHECK (КОНТРОЛЬ 250в); the tester voltmeter must read 250±5 V.

2. Check the operation of the decoding circuit. For this purpose install the tester and converter МА-100 that feeds it on the right or left of the aircraft so the the distance from the receiving and transmitting antennas of the range finder to the tester is not less than 5 m., and the line of the tester antennas is in parallel with the aircraft axis. Energize the range finder and tester. Set knob BAND on indicator ПРД-50 to position "0–30 km". Set knob RANGE BAND (ДИАПАЗОН ДАЛЬНОСТИ) on tester КИПД-1 to position "1". Set knob RANGE AND ORBIT (ДАЛЬНОСТЬ И ОРБИТА) of the tester to position "10 KM" on the first band scale.

1 - 2 min. after the range finder has been energized the pointer of indicator ПРД-50 on the instrument panel of the left pilot must settle against scale mark 10 allowing for error. Simultaneously left-hand lamp CALL SIGNAL on control panel СД-1-3 must go out.

Depressing button CODE (КОД) on the tester must cause lamp CALL SIGNAL to light up simultaneously with the depressing of the button.

Make a check on the first and second bands, and in the orbiting mode.

3. Check the operation of the tuning out circuit. For this purpose set knob of indicator ПРД-50 to the second band (0 - 150 km.) and press button RETUNING (ПЕРЕСТРОЙКА) on control panel СД-1-3; pressing the button will stop the locking, the pointer of indicator ПРД will have to search and come back immediately to read the previous range; lamp CALL SIGNAL must light up when the pointer starts searching and go out when it comes back.

4. Check the operation of the communication channel selector. For this purpose set the tester knobs RANGE BAND to position 1 (first band), and knob RANGE, KM (ДАЛЬНОСТЬ В КМ) to mark 15 km. Operate knobs COMMUNICATION CHANNELS (КАНАЛЫ СВЯЗИ) on control panel СД-1-3 and MODE OF OPERATION on the tester to set by turns similar channels. In this case the pointer of indicator ПРД-50 should read 15 km. range.

Set these knobs to different position; the indicator pointer must stop reading range and start searching. Lamp CALL SIGNAL should burn.

5. Check the reading errors of the range finder on the first band. For this purpose set knobs BAND and MODE OF OPERATION of range indicator ПРД-50 to position "0 - 30 km". Set knob RANGE BAND of tester КИПД -1 to position "1", knob RANGE AND ORBIT to such a position at which the indicator pointer settles exactly against scale mark "5 KM". In this case, the reading error read on the tester scale RANGE AND ORBIT should not come beyond the limits given in Table 30 and calculated by formula

$$\Delta n_1 = \pm 0.6 + 0.02 n_1.$$

where Δn_1 = the maximum permissible error for the range measured in km. on the first band

n_1 = reading of range indicator ПРД-50 in km.

Check similarly the reading errors on the following marks of the indicator scale: "10", "15", "20", "25" and "30" km. using Table 30.

Table 30

Errors of Indicator Readings at Check

Points of First Band

Points of range measurement (km.) on first band	5	10	15	20	25	30
Permissible reading errors, km.	±0.7	±0.8	±0.9	±1.0	±1.1	±1.2

6. Check the range reading error of the range finder on the second band(0 - 150 km.). For this purpose set knob BAND of the range indicator to position "0 - 150 km.", knob RANGE BAND of the tester to position II (second band). Determine the reading error of the indicator on the scale marks: "25", "50", "75", "100", "125" and "150" when knob RANGE AND ORBIT is set according to Point 5.

The reading error should not come beyond the limits of values given in Table 31 and calculated by formula

$$\Delta n_{11} = 3.0 + 0.02 n_{II},$$

where n_{11} = the maximum permissible error for the range measured in km. on the second band.

n_{11} = reading of indicator ПРД-50 in km.

Table 31

Errors of Indicator Readings at Check

Points on Second Band

Points of range measurement (km.) on second band	25	50	75	100	125	150
Permissible reading errors, km.	±3.5	±4.0	±4.5	±5.0	±5.5	±6.0

7. Check the range reading error of range indicator ПРД -50 in the orbiting mode. For this purpose, set knob MODE OF OPERATION of the indicator to position

[redacted]

50X1-HUM

ORBIT, knob RANGE BAND on tester КИПД-1 to position ORBIT. Operate knob RANGE AND ORBIT on the tester to set 9 km. range (9th orbit). Set knob ORBIT on control panel СД-1-3 to position "9" (9th orbit). In this case the indicator pointer should approach the middle of the scale smoothly and stop within the limits of the triangular mark.

Check similarly the indicator reading errors on orbits 11, 13, 15, 17 and 19.

If the indicator pointer fails to settle within the limits of the triangular mark, operate knob RANGE AND ORBIT on tester КИПД-1 to bring the pointer to the nearest extremity of the triangular mark and find on scale RANGE AND ORBIT of the tester the reading error which should not exceed +0.25 km. of all No. of orbits.

<u>Note:</u> The sector of the indicator pointer swinging in the search mode during orbiting is displaced on the scale from left to right with orbit number increasing in numerical succession. On orbits "9" and "11" the indicator pointer can reach the left stop of the scale.

8. Check the frequency of transmitter generator СБ-1-2. For this purpose install tester КИПД-3 and converter МА-100 near the transmitting antenna. Connect a rod antenna to R.F. receptacle TO RECEIVER (К ПРИЁМНИКУ) on instrument КИПД-3 using a cable from the spares set of КИПД-3. Set the function switch on instrument КИПД-3 to position FREQUENCY OF TRANSMITTER СД-1 (ЧАСТОТА ПЕРЕДАТЧИКА СД-1). Energise the instrument.

Bring the antenna of instrument КИПД-3 to transmitting antenna СД-1-2 and keep it vertically 0.5 - 0.7 m. away from the aircraft body on the line between the transmitting and receiving antennas of the range finder. Find the generator frequency, rotating the wavemeter tuning knob on the instrument until maximum deflection of meter "КВ" pointer on instrument КИПД-3 is obtained. Read the generator frequency (in Mc/s) on the limb scale marked FREQUENCY Mc/s (ЧАСТОТА В МГЦ). The frequency of the transmitter generator must be within 845±1 Mc/s.

9. Check the frequency of the receiver local oscillator. To do this, bring the antenna of instrument КИПД-3 close to receiving antenna СД-1-1 and keep it near the aircraft body so that the antennas are in parallel alignment with each other. Set the function switch of instrument КИПД-3 to position RECEIVER FREQUENCY (ЧАСТОТА ПРИЕМНИКА).

Determine the local oscillator frequency in accordance with Point 8. The oscillator frequency must be within 855 ± 1 Mc/s.

<u>CAUTION:</u> Operations indicated in Points 8 and 9 should be done in case of unstable operation of the range finder.

10. Deenergize the range finder and testers КИПД-1 and КИПД-3.

<u>Localiser Receiver КРП-Ф and Glide-Slope Receiver</u>
<u>ГРП-2 of Instrument Landing System</u>

(feeder Н7200-22)

1. Check mechanical "zeroes" of instrument ПСП-48.

2. Energize receivers КРП-Ф and ГРП-2, for which purpose turn on tumbler АЗС-10 of the ILS of the circuit-breaker panel of the left pilot and the tumbler on the ILS control panel.

3. Install simulators КИРМ-Ф and ГИРМ-2 5 - 15 m. in front of the aircraft and energize them.

4. Check the performance of the localizer receiver for which purpose:

Set switches of simulator КИРМ-Ф (Fig. 161) to positions: COURSE (КУРС), OPERATION (РАБОТА), MODULATION (МОДУЛЯЦИЯ), FIXED WAVE No.1 (ФИКСИРОВАННАЯ ВОЛНА No.1); set the channel selector on the ILS control panel to position "1"

(first channel). This will cause operation of the drop indicator of the COURSE channel emergency signalling system (the black bulleye drops) and right- or left-side deflection of the vertical pointer of indicator ЛСП-48 depending upon the position occupied by the phase shifter limb on simulator КИРМ-Ф. The indicator pointer must overshoot when the limb is turned by 90°.

Check the operation of the localizer receiver on the other channels setting the wave switches on simulator КИРМ-Ф and control panel simultaneously in positions "2", "3", "4", "5" and "6".

Control panel M-50 and indicator ПСП-48 are shown in Figs 162 and 163.

Make sure that the pointer does not deflect and the drop indicator does not operate when the simulator and receiver operate on different fixed waves. For this purpose switch over the receiver channels alternately (from the first to the sixth) for each position of selector FIXED WAVE (ФИКСИРОВАННАЯ ВОЛНА) on simulator КИРМ-Ф.

<u>CAUTION:</u> The pointer of indicator ПСП-48 is allowed to deflect within the black circle in the absence of signals from simulator КИРМ-Ф.

5. Check the electrical zero (balancing) of the localizer receiver. For this purpose press button ZERO CHECK (КОНТРОЛЬ НУЛЯ) on the front panel of the receiver; the vertical pointers of indicators ПСП-48 should come to stand against zero (boundary between the blue and yellow sectors of the indicator scale). Check in the like manner the electrical zero by pressing button CHECK on control panel M-50.

If the indicator pointers fail to settle against zero, open the cover labelled ADJUSTMENT on the front panel of the receiver (Fig.164), loosen the locking nut of control knob BALANCE (БАЛАНС), turning by means of a screwdriver control knob BALANCE adjust the indicator pointers exactly to the scale zero and then lock the control knob.

6. Check the localizer receiver sensitivity. In doing this turn the limb of the simulator phase shifter through such an angle that the meter pointer on the simulator may stop at the end of the yellow-blue sector of the scale. In this case, the vertical pointers of indicators ПСП-48 should also deflect to the right and stop at the end of the yellow sector. Turn the phase shifter limb counter-clockwise until the pointer of the simulator meter comes to stand at the end of the yellow-blue sector. As a result the indicator pointer must deflect to the left.

<u>CAUTION:</u> 1. The pointer is allowed to deflect asymmetrically to either side by 20 per cent.

2. The difference of pointer deflection of both indicators is allowed to be 20 per cent towards one side.

7. At larger or smaller deflection of the indicator pointers with respect to the end of the blue or yellow sector of the scale, adjust the receiver sensitivity by control SENSITIVITY (ЧУВСТВИТЕЛЬНОСТЬ) located on the front panel of the receiver so that the indicator pointer stops at the end of the yellow or blue sector of the scale.

Lock the sensitivity control and shut cover ADJUSTMENT of the localizer receiver.

8. Check the performance of glide-slope receiver ГРП-2. In doing this proceed as follows:

(a) Set switch H.F. LEVEL - L.F. LEVEL (УРОВЕНЬ В.Ч. - УРОВЕНЬ Н.Ч.) on simulator ГИРМ-2 (Fig.165) to position L.F. LEVEL switch MODE OF OPERATION to position 90 c.p.s. LEVEL (УРОВЕНЬ 90 ГЦ) and rotate knob 90 c.p.s. LEVEL to adjust the meter pointer of simulator ГИРМ-2 to mark LEVEL.

(b) Set the function switch to position 150 c.p.s. LEVEL and rotate knob 150 c.p.s. LEVEL to adjust the meter pointer to mark LEVEL.

(c) Reswitch as indicated in Point 8 a, b, and make sure that the meter pointer settles exactly against mark LEVEL after every operation.

[redacted]

(d) Set the fixed-wave switch on the simulator to position "1".

Set switch H.F. LEVEL - L.F. LEVEL to position H.F. LEVEL and operate knob H.F. LEVEL to adjust the simulator meter pointer to mark LEVEL.

Set the channel selector on the control panel of receivers ГРП-2 and КРП-2 successively to positions "1", "2", "3", "4", "5" and "6". In this case the horizontal pointer (glide-slope indicator) must deflect, and the drop indicator of the emergency signalling system must operate only when the channel selector on the receiver control panel is set at positions "1" and "2".

Depending upon the setting of switch MODE OF OPERATION on simulator ГИРМ-2 to positions marked with signs showing the direction of the pointer deflection the horizontal pointer of indicator ПСП -48 must deflect up or down respectively.

(e) Repeat as instructed under Point 8, d for the remaining positions of the wave switches, taking into account that positions of the switch on the control panel of the receivers correspond to those of the fixed-wave switch of simulator ГИРМ-2 in the following order:

Positions of switch on simulator	1	2	3
Positions of switch on control panel	1 and 2	3 and 4	5 and 6

9. Check the electrical zero (balancing) of glide-slope receiver ГРП-2, for which purpose set the function switch on simulator ГИРМ-2 to position CHECK; in this case, the horizontal pointers of indicators ПСП-48 must settle against zero, along the horizontal dotted line on the scale.

If the balancing is upset, open the cover labelled ADJUSTMENT on the glide-slope receiver (Fig.166), slacken locking nut of control BALANCE and operate the control with a screwdriver to set it so that the horizontal pointers of the indicators settle against zero. Lock control BALANCE.

<u>Note</u>: The electrical zero is allowed to be checked directly through the low-frequency channel of the receiver. For this purpose connect socket RECEIVER on simulator ГИРМ-2 through a special cable from the complement of the simulator to socket TESTER (ТЕСТЕР) on the localiser receiver and do operations indicated under Point 9.

10. Check the glide-slope receiver sensitivity. For this purpose set switch MODE OF OPERATION on the simulator alternately to the positions showing the direction of the pointer deflection (Positions 4 and 5). In this case, the horizontal pointers of indicators ПСП-48 must settle respectively between the first and third dots of the upper or lower vertical line of dots on the indicator scale, and the drop indicators of the emergency signalling system must operate. If the pointers fail to settle within the given limits, unlock control SENSITIVITY on the glide-slope receiver and turn it with a screwdriver so that the indicator pointers will stand against the second dot (from the centre) in the vertical row.

Lock the SENSITIVITY control and shut cover ADJUSTMENT on the glide-slope receiver.

CAUTION: 1. The pointers are allowed to deflect asymmetrically up and down by 20 per cent as well as to differ in deflection by up to 20 per cent towards one side on both indicators.

2. The sensitivity is allowed to be checked with the receiver directly connected to simulator ГИРМ-2 through radio-frequency cable РДБ-82 taken from the simulator complement. In this case, disconnect the antennas of the receiver and simulator and check the sensitivity as instructed under Point 10.

Receivers Trouble Chart

Trouble	Probable cause	Remedy
1	2	3
	Localizer receiver КРП-Ф	
On energizing receiver, dynamotor fails to operate	Blown fuse in supply circuit. No contact in tumbler ON on control panel. Poor contact in terminal block connecting dynamotor with receiver. Break in wires of supply circuit. Defective dynamotor	Replace fuse. Check and make tighter contacts in supply connectors. Replace dynamotor
Dynamotor operates, but pointer fails to deflect when rotating control BALANCE	Defective valve Л10 (6Н8М)	Replace defective valve
Indicator pointer deflects and overshoots to one side only	Maladjusted control BALANCE	Adjust control BALANCE
With simulator КИРМ-Ф operating the indicator pointer fails to deflect to both sides. SENSITIVITY control has no effect on pointer deflection, but drop indicator operates normally	Shorted contact ZERO CHECK or relay P7. Control SENSITIVITY is at minimum	Eliminate short circuit. Adjust sensitivity
Receiver fails to operate, no negative voltage across pins 4-5 of valve Л13	Defective valve Л13 (12П1)	Replace valve
Receiver fails to operate on one of channels	Defective crystal. Poor contact in switch on control panel	Replace crystal. Restore switch contact
Relay of one or two of channels fails to operate	Break of relay supply circuit. Punctured winding of channel relay in receiver ГРП-2	Eliminate break or poor contact in supply circuit of relay winding. Replace defective receiver ГРП -2
Drop indicator of emergency signalling system fails to operate	Poor contact, break or short in drop indicator supply circuit	Check supply circuit, eliminate trouble
With simulator operating, pointer of indicator ПСП-48 deflects little	Interelectrode short in one of valves	Check valves, replace defective one

[redacted]

50X1-HUM

1	2	3
	Glide-slope receiver ГРП-2	
On energizing receiver dynamotor fails to operate	Blown fuse of receiver in distribution box Poor contact in supply connectors on receiver or control panel. Poor contact in dynamotor terminal block. Broken supply wires	Identify supply circuits. Make tighter contacts in connectors. Restore wire connections
Pointer of indicator ПСП-48 fails to deflect when simulator ГКРМ-2 operates. Drop indicator does not operate	One of valves is defective. Poor contact in terminal block of dynamotor	Replace defective valve. Make tighter contact in terminal block
Receiver fails to operate on one of channels	Poor contact in channel selector. Defective crystal. Break in supply wire of relay winding	Make contact tighter. Replace crystal. Restore wire connection
Pointer of indicator ПСП-48 does not deflect. Drop indicator operates	Poor contact in indicator connector. Defective indicator	Make contact tighter. Replace indicator ПСП-48
Low sensitivity of receiver	Low voltage of aircraft mains. Loss of emission by one or several valves	Adjust aircraft mains voltage to 27.5 – 28 V. Check valves, replace defective ones
During joint operation of both receivers receiver КРП-Ф does not operate on one of waves	Winding of one of relays of receiver ГРП-2 shorts relay winding of receiver КРП-Ф	Send receiver ГРП-2 to repair shop to have defective relay replaced

CAUTION: With the receiver energized do not remove the valves from their sock as it may result in good valves being damaged due to overheating.

Airborne Transponder СРО

(feeder Н7200-20)

CAUTION: Do not insert the fuse plug into ARMED socket on the transponder transmitter-receiver (do it only before flight).

1. Check the ARMED circuit of the station, for which purpose (if there is a battery in Ф-2):

(a) Connect a 28-V lamp to the pins of the fuse plug.

(b) Press button EMERGENCY ARMED - TRANSPONDER (АВАРИЙНЫЙ ВЗРЫВ – РАДИООТВЕТЧ the instrument panel of the left pilot; in this case the lamps on the ARMED butt and that indicating connection to the fuse plug light up.

(c) Disconnect one pole of the lamp from the fuze plug and connect it to the aircraft body; the lamp should not burn. Check similarly the second pin of the fuze plug.

2. Check the inertia switch. In doing this proceed as follows:

(a) Turn out the upper transparent cover of the contactor.

(b) Connect the pilot lamp to the contactor plug.

(c) Move the pendilum lever until a sharp click is heard. In this case, the lamps on the ARMED button body and pilot lamp on the contactor plug must come on.

(d) Cock the inertia contactor again. For this purpose turn out the transparent cover on the right side, insert a screwdriver in the screw slot and turn the screw fully counter-clockwise. The pendilum lever must settle and fix itself in the vertical position. The lamps on the button and contactor plug must go out.

(e) Seal the contactor covers.

Checking Airborne Transponder on the Ground

1. Energize the transponder by tumbler АЗС-5 TRANSPONDER located on the circuit breaker panel of the right pilot and by the TRANSPONDER switch on the control panel of the left pilot. In this case, a code illumination lamp must light up on the code panel of the left pilot.

2. Have the ground interrogator positioned at the control post energized. This is done by challenging over the radio from the aircraft being checked.

3. Set tumbler READY - RESPONSE (ГОТОВНОСТЬ-ОТВЕТ) to position RESPONSE.

4. Check the code system for proper operation by placing the code selector on the code panel successively from the first to the fourth position. In this case morse code signals corresponding to preset code must be heard in the earphones connected to the TGPH sockets on the code panel. At the same time the code lamps on the code panel must flash in step with the signals. During transmission of a short signal (dot) one lamp must light up, during transmission of a long signal (dash) - two lamps.

The sequence of short and long signals during transmission of codes is tabulated below.

Table 32

Transponder Codes (Pulse Sequence)

Codes	Letters	Cycle				
		1	2	3	4	5
1	X	Narrow	Narrow	Narrow	Narrow	Interval
2	C	Narrow	Narrow	Narrow	Interval	Interval
3	D	Narrow	Narrow	Wide	Wide	Interval
4	Y	Narrow	Narrow	Wide	Interval	Interval

5. Switch on tumbler DISTRESS SIGNAL (БЕДСТВИЕ) on the code panel. This will cause transmission of distress signals instead of intervals alongside with code signals. Both code lamps must light up simultaneously with distress signals.

[redacted]

50X1-HUM

Radar Bombsight РБП-4

The preflight preparation of the sight comprises:
(1) Visual inspection.
(2) Checking air-tightness of the waveguide system and units P2 and P12.
(3) Checking and adjustment of the live equipment of the navigator-operator.
(4) Checking the pulse length for automatically switching on optical sight ОПБ-1lр.
(6) Checking and adjustment of the live equipment of the navigator.

Visual Inspection

When inspecting the sight visually proceed as follows:

(1) Check the presence of all the units and inspect their surface for evidence of mechanical damage.

(2) Check that the units are secured reliably on shock-mounted frames.

(3) Check the connection of cables and feeders to all the units according to their numbers; make sure that the cable and feeder connectors are closely tightened with nuts.

(4) Check for presence and good condition of all the fuses (working and spare) in connection box P-15 (See Table 33).

(5) Check for complete set of spare equipment and radio valves.

Table

Fuses

No.	Fuse No.	Unit	Current, A	Voltage, V
1	2	3	4	5
1	15-1	P3	2	115
2	15-2	P4	2	115
3	15-3	P5/1	2	115
4	15-4	P11	10	115
5	15-5	P10	2	115
6	15-6	P14(P5/2, P7, P8)	5	115
7	15-7	P2 and P12	10	115
8	15-8	P1	5	115
9	15-6	Control (P3 and P6)	15	27
10	15-10	P14(P7, P8, P9, P11p, P5/2)	5	27
11	15-11	P2 and P12	10	27
12	15-12	P1 and P5/1	10	27
13	15-13	Asimuth 1	2	27
14	15-14	Asimuth 2	2	27

Checking Air-Tigtness of Waveguide System and Units P2 and P12

The waveguide system and units P2 (Fig.168) and P12 is checked for airtightness by means of device 137-м that comes with the equipment.

ATTENTION: When making a check do not shut the pipe connection of the intake valve on unit P12.

Connect the nipple of the rubberized hose of device 137-м to the outlet nipple
of unit P2 through reducer BM-950. Build up an excessive air pressure of 0.8 atm.
in the airtight system. Switch on the continuous rotation of the antenna for
30 min. and then sector swinging for 30 min. changing the antenna tilt periodically.
After an hour check the pressure in the airtight system by the low-pressure gauge
of device 137-м. The gauge reading should not differ from the initial value by more
than 0.03 atm.

Checking and Adjustment of Live Equipment of Navigator-Operator

CAUTION: 1. Voltages dangerous to human life exist in the operation of the
equipment; removal of the cases and disconnection of the cables with power
on should be allowed on no circumstances.
2. The bombsight is allowed to be energized on the ground if at
least 5-kW airfield power supply is available.
3. Prior to changing over converters ПО-4500 it is necessary to
switch off circular scanning and sector scanning to prevent unphasing of the
bombsight indicators.
4. Make various adjustments except those in 27-V circuit only after
the equipment has warmed-up for 15 min.
5. Switch on the transmitter only 2-3 min. after power has been
turned on.
6. In case of elevated ambient air temperature do not switch on the
equipment for a long period. At +50°C the continuous operation of the
equipment should not be longer than 50 min. The equipment is allowed to be
energized 1 hour after it has been deenergized.
7. At ambient temperatures below -10°C the transmitter may be energized
after the equipment has been warmed-up for 15 min.
8. To avoid cocking of the covers and damage to the case collar, turn
in and out the bolts and nuts during installation and removal of the covers
of units P2 and P12 gradually in the sequence shown in Fig.169.
9. When tightening the covers set all the bolts previously into the
cover holes and centre the cover in reference to all eight bolts.
10. When working on the ground with the transmitter energized tilt the
antenna by -25° if there is no need to obtain presentation.

1. Set the equipment controls in the positions indicated in Table 34.
2. Make sure that 27.5 V D.C. are applied. If necessary, give instructions to
the electrician to adjust the ground supply voltage to 27.5 V.
3. Set the converter switch to position OPERATING (РАБОЧИЙ) (in special cases,
to position STAND-BY (РЕЗЕРВНЫЙ).
4. Close the circuit breaker of converter ПО-4500 on the circuit-breaker panel
of the navigator-operator.
5. Consult the 115 V A.C. aiborne check voltmeter to make sure that A.C. voltage
is applied and to measure its magnitude. If the voltage is outside the 113 - 117-V
range bring it to normal (115 V) by means of the converter adjusting screw located
on the electric panel of the navigator-operator.
6. Close circuit-breaker АЗС-20 RADAR SIGHT (РАДИОПРИЦЕЛ) on the circuit-
breaker of the navigator-operator.
7. Use the interphone system to warn the technician who is now at the aircraft
navigator's position about the bombsignt to be energized and get an answer as to
its being ready for energizing.

[redacted]

50X1-HUM

8. Press button SUPPLY ON (ПИТАНИЕ ВКЛ.) on unit P6 (Figs 170 and 171). Green pilot lamps must light up on the panel of the navigator-operator (P6) and bomb aimer's panel P9. Consult voltmeter SUPPLY on unit P6 to make sure that it reads 115 V, 400 c.p.s.

Make sure that voltmeter CHECK (КОНТРОЛЬ) on unit P6 reads +300 V D.C. If necessary operate potentiometer +300-V ADJUSTMENT (УСТАН. НАПР. +300в) on unit P11 to adjust the voltage to +300 V.

Set switch CHECK on unit P6 to position "-300 V" (-300 в). Make sure that this voltage is within -290 to 320 V (the pointer overshoots not more than 2 mm). This done, set the switch to position MAIN CRYSTAL CURRENT (ТОК КРИСТ.ОСН.).

Table 34

INITIAL POSITIONS OF CONTROLS ON UNITS

РБП-4 and ОПБ-11р

Unit	Controls	Position
1	2	3
Navigator-operator s panel P6	Switch CHECK	+ 300 V
	Switch AFC-BEACON	AFC - OFF
	Switch RANGE, KM	"10 - 70"
	Switch SWEEP DELAY, KM (ЗАДЕРЖКА РАЗВЕРТКИ КМ)	0
	Switch ROTATION (ВРАЩЕНИЕ)	OFF
	Switch COURSE LINE (ЛИНИЯ КУРСА)	OFF
	Switch SECTOR SCANNING (СЕКТОРНЫЙ ОБЗОР)	OFF
	Switch FREQUENCY	"1"
	Knob ALTITUDE DELAY (ЗАДЕРЖКА НА ВЫСОТУ)	Extreme counter-clockwise position. Middle position
	Knob RECEIVER TUNING	Extreme counter-clockwise position
	Knob "10-70"	
	Knob POSITION CONTROL (РЕГ.ПОЛОЖ.)	Middle position
	Knob RANGE MARKER BRIGHTNESS (ЯРКОСТЬ МЕТОК ДАЛЬН.)	Extreme counter-clockwise position
	Switch MARKERS (МЕТКИ)	Middle position
Operator s and photoattachment indicator P5/1, P5/2	Azimuth scale rotation knob	Scale zero is matched with zero index
	Light filter rotation knob	Central vertical line on light filter is matched with zero index
	Knob SCALE ILLUMINATION (ПОДСВЕТ ШКАЛЫ)	Extreme counter-clockwise position
	Knob BRIGHTNESS	Extreme counter-clockwise position
Bomb aimer s panel P9 (Figs 172 and 173)	Switch CALIBRATION (КАЛИБРОВКА)	OPERATION
	Knob SCALE ILLUMINATION	Extreme counter-clockwise position
	Scale SLANT RANGE CORRECTION (ПОПРАВКА НАКЛОННОЙ ДАЛЬНОСТИ)	"0"
	Switch SEARCH - HOMING (ПОИСК -НАВЕДЕНИЕ)	SEARCH
	Switch SPEED GENERATOR (ГЕНЕРАТОР СКОРОСТИ)	OFF
	Knob POSITION (ПОЛОЖЕНИЕ)	Extreme counter-clockwise position
	Knob TRACK SPEED (ПУТЕВАЯ СКОРОСТЬ)	200
Bomb aimer's indicator P8 (Figs 174 and 175)	Knob BRIGHTNESS	Extreme counter-clockwise position
	Knob SCALE ILLUMINATION	Extreme counter-clockwise position
	Switch AZIMUTH (АЗИМУТ)	ON
	Light filter	To be turned until the lock operates
	Azimuth scale	Scale zero is matched with central vertical line on light filter
Range unit P3 (Fig.176)	Switch CALIBRATION - OPERATION (КАЛИБРОВКА - РАБОТА)	OPERATION
Navigator-operator lock unit P4 (Fig.177)	Knob LOW LEVEL (НИЗКИЙ УРОВЕНЬ)	1/4 of turn from extreme counter-clockwise position
	Knob HIGH LEVEL (ВЫСОКИЙ УРОВЕНЬ)	1/4 of turn from extreme clockwise position
	Knob RECEIVER GAIN	Extreme counter-clockwise position
Optical sight ОПБ-11р	Index of sighting angle scale	"0"
	Scale ALTITUDE (ВЫСОТА)	"14 KM"
	Index of drift angle scale	"0"
	Lock of vertical gyro	LOCKED (ЗААРЕТИРОВАНО)
	Switch CORRECTION (КОРРЕКЦИЯ)	ON
	ON-OFF switch on altitude unit	OFF
	Handle LAG (ОТСТАВАНИЕ)	"0"
	Handle SERIES (СЕРИЯ)	"0"
	Other controls	According to operating instructions for optical sight ОПБ -11р

[redacted]

9. Gauge PRESSURE IN TRANSMITTER (ДАВЛЕНИЕ В ПЕРЕДАТЧИКЕ) on unit P6 should read normal pressure of 1 + 0.2 atm. After the equipment is warmed up the pressure may rise to 1.4 atm.

10. Make sure (by ear) that the fan motors in units P2 and P12 are started.

11. Turn knob SCALE ILLUMINATION on indicators P5/1 and P5/2 until the scale is properly illuminated.

12. Turn knob BRIGHTNESS on indicators P5/1 and P5/2 clockwise until appearance of the sweep trace. Turn switch RANGE,KM on unit P6 to positions "10", "20", "10-70", "100" and "200" and then return it to position "10-70". Do in the like manner when setting switch AFC-BEACON to position BEACON, the sweep should not varnish from the indicator screens at all positions of switches RANGE,KM and AFC-BEACON on unit P6.

The sweep brightness is controlled by knobs BRIGHTNESS on units P5/1 and P5/2.

13. Use knob FOCUS on the indicators to focus the sweep trace so that it may be as thin and contrast as possible. To avoid the interference of the screen after-glow displace the sweep trace by momentarily pressing switch SEARCH on unit P6.

<u>Note</u>: Focusing on indicators P5/1 and P5/2 is obtained noticeably better than that on indicator P8.

14. Set switch SWEEP DELAY,KM in all positions from "0" to "400"; the sweep should not varnish from the indicator screens. Reset the switch to the zero position.

15. Set switch ANTENNA TILT (НАКЛОН АНТЕННЫ) first to position UP (ВВЕРХ) and then to position DOWN (ВНИЗ). Make sure by the tilt indicator on unit P6, that the antenna is tilted up by $5\pm1^\circ$ and down by $25\pm2^\circ$ from the horizontal position. Establish a tilt angle of $0\pm2^\circ$ as read by the tilt indicator.

16. Set switch SEARCH on unit P6 to position RIGHT (ВПРАВО) and allow the antenna to make 2 – 3 revolutions, then to position LEFT (ВЛЕВО); the sweep trace must rotate jerkless in the direction corresponding to the switch position at a speed of 9.5 to 14.5 r.p.m. Release the switch.

17. Turn on switch ROTATION located on unit P6. In this case, the sweep trace must rotate smoothly clockwise at a speed of 16 – 24 r.p.m.

The start of the sweep should be matched with the light filter cross-hairs. When displacing the sweep it is necessary to match the start of the sweep with the centre of the indicator filter by means of knobs HORIZONTAL CENTRING (ЦЕНТРОВКА ГОРИЗ.) VERTICAL CENTRING (ЦЕНТРОВКА ВЕРТ.) on units P5/1 and P5/2.

<u>Note</u>: Make centring on indicator P5 so that the outer end of the sweep may be concentric in relation to the inner circle of the azimuth scale with the antenna rotating.

There may be a discrepancy between the start of the sweep and centre of the light filter at which the start of the sweep describes a circle of not more than 3 mm in diameter with the eccentricity not exceeding 0.5 mm.

18. Turn on switch COURSE LINE and make sure that there is a course line on the indicator screen. The course line must coincide with the vertical index line of the light filter and azimuth scale zero accurate to $\pm1.5^\circ$.

<u>Note</u>: Course line is not traced on the screen of indicator P8.

Turn off switches ROTATION and COURSE LINE.

19. Turn on switch SECTOR SCANNING. As a result, the sweep trace on the indicator screen must swing within a sector of $45\pm10^\circ$ with a frequency of 40 – 60 oscillations per minute.

Rotate knob POSITION CONTROL fully clockwise and then fully counter-clockwise; make sure that the sector is displaced in azimuth in the front zone limited by angles 305 – 55° – on the azimuth scale of the indicator.

Turn off switch SECTOR SCANNING.

20. Turn potentiometer RANGE MARKER BRIGHTNESS on unit P6 clockwise until range markers appear on the indicator screens. Check the presence of range markers on the screens in all positions of switch RANGE KM on unit P6. Range markers should appear with 2-km. intervals with switch RANGE KM in position "10", with 10-km. intervals in position "10-70" and 20 km., and with 20-km. intervals in positions "100" and "200" km.

<u>Note</u>: The marker brightness should be so inserted as to avoid backward journey of the markers on the sweep trace; potentiometer RANGE MARKER BRIGHTNESS should not be placed in the extreme clockwise position.

21. Check the sweep range scale when setting switch RANGE KM to position "10", "20", "100" and "200". If the markers are not in the respective number in one of the switch positions, adjust the amplitude and range of the sweep on the screen of the navigator-operator's indicator following the procedure below:

(a) Set switch RANGE KM in position 20.

(b) Turn knob SWEEP AMPLITUDE (АМПЛИТУДА РАЗВЕРТКИ) on unit P4 fully counter-clockwise.

(c) Adjust potentiometer RANGE CONTROL (РЕГУЛИРОВКА ДАЛЬНОСТИ) on unit P4 so that two range markers are visible on the sweep trace and the sweep trace does not come beyond the second range marker.

(d) Adjust the sweep by potentiometer SWEEP AMPLITUDE so that the second 10-km. marker is coincident with the inner circle of the indicator azimuth scale.

(e) Set switch RANGE KM on unit P6 successively to position "10" and "20" and make sure that 2 and 5 markers respectively have appeared on the sweep trace (counting the markers just after the start of the sweep).

(f) Set switch RANGE KM on unit P6 successively to position "100" and "200" and make sure that 5 and 10 range markers respectively have appeared on the sweep trace.

(g) If the operation (Points e and f) does not cause the required number of markers to appear, readjust potentiometer RANGE CONTROL on unit P4.

(h) If the sweep amplitudes on indicators P5/2 and P8 differ from that on the navigator-operator s indicator, remove the cover of unit P4 case and make an additional adjustment of the sweep amplitude of the indicators by potentiometers P4-15 and R4-16 located at the rear wall in unit P4.

(i) Set all the control knobs to the initial positions.

22. Set switch RANGE KM to position "10-70", turn knob "10-70" fully counter-clockwise. In this case only one marker is allowed to appear on the indicator screen at the very end of the sweep trace. Turn knob "10-70" fully clockwise; this will cause 7-10 ten-km. markers to appear on the indicator screen.

23. Set switch CALIBRATION – OPERATION on unit P3 to position CHECK 5-1, switch RANGE KM on unit P6 to position "10-70". In this case four 2-km. range markers with adjustable brightness must locate on the indicator screen between all bright 10-km. markers. If the division is not in line with 5:1 ratio, rotate potentiometer FREQUENCY DIVISIONS 5:1 (ДЕЛЕНИЕ ЧАСТОТЫ 5:1) on the front panel of unit P3 to obtain correct and clear division.

When setting frequency division 5:1 proceed as follows:

(a) Set 40 – 50 km. range by turning knob "10-70" on unit P6.

(b) Turn potentiometer FREQUENCY DIVISION 5:1 clockwise until division 5:1 is out of alignment; note this position.

(c) Turn potentiometer FREQUENCY DIVISION 5:1 counter-clockwise until division 5:1 is out of alignment; note this position as well.

(d) Set the potentiometer mid-way between the marked positions.

24. Set switch CALIBRATION – OPERATION on unit P3 to position CHECK 6:1, switch RANGE KM on unit P6 to position "200". In this case five 20-km. range markers must locate between two 6:1 division marks. If the frequency division is not in line with 6:1, obtain the correct division by rotating potentiometer FREQUENCY DIVISION 6:1

[redacted]

on the front panel of unit P3. Frequency division 6:1 is set in the same way as division 5:1.

Note: When setting frequency division 6:1 potentiometer RANGE CONTROL on unit P is allowed to rotate until stable markers are obtained on indicator screens.

After the frequency division (6:1) has been checked make a check on the sweep range as instructed in Point 20.

25. Set switch CALIBRATION - OPERATION on unit P3 at OPERATION, switch RANGE KM on unit P6 to position "10-70", knob "10-70" to the maximum clockwise position, knob POSITION on unit P9 to the mid position, tumbler MARKERS on unit P6 to position CALCULATION (ВЫЧИСЛ.). Set a shorter range on the RANGE scale on unit P6 than the range corresponding to the indicator sweep.

Under normal operation in the SEARCH mode indicators P5/1, P5/2, and P8 will display a range marker being off the centre at a distance corresponding to the range indicated on scale RANGE.

26. To check the operation of the step delay set switch CALIBRATION - OPERATION on unit P3 to position FREQUENCY DIVISION 6:1, switch RANGE KM on unit P6 to position "200". When setting switch SWEEP DELAY KM to position "0" and "20", four 20-km. markers should appear on the sweep forward of the first bright marker. If they do not, use potentiometer ZERO to adjust the step delay. Rotating switch SWEEP DELAY KM on unit P6 clockwise must cause the bright mark of frequency division 6:1 to move towards the centre of the indicator screen. The mark moves by 20-km. steps upon every switching, except the first one (from 0 to 20).

If in any position of the switch, 6:1 frequency division mark fails to cover 20 km. with respect to the previous position, adjust step delay by potentiometer ZERO and RANGE SCALE on unit P3. If you experienced in doing this operation make an adjustment without using an oscillograph. Otherwise adjust the delay of the sweep start by steps up to 400 km. following the procedure below:

(a) Connect the oscillograph input to grid 1 of coincidence valve Л3-9 in unit P3.

(b) Set oscillograph knobs in the following positions:

- switch SYNCHRONIZING (СИНХРОНИЗАЦИЯ) - in position INTERNAL (ВНУТРЕННЯЯ),
- switch SWEEP - in position "250 - 500 microsec."

Set switch CALIBRATION - OPERATION on unit P3 to position OPERATION, switch RANGE KM on unit P6 to position "200", switch AFC - BEACON to position BEACON - ON.

Turn switch SWEEP DELAY KM and watch the marker on the pedestal of the oscillograph screen. If the marker is moved off the middle of the pedestal, move it back by rotating step delay potentiometers ZERO and RANGE SCALE. Rotate potentiometer ZERO with switch SWEEP DELAY KM in positions from 0 to 100 km. At greater delays, rotate step delay potentiometer RANGE SCALE. Make adjustments until the marker is at the middle of the pedestal (but no farther than 1/4 width of the pedestal from the middle) in all positions of switch SWEEP DELAY KM.

Connect the oscillograph input to cathode 3 of coincidence valve Л3-9 in unit P3. Turn switch SWEEP DELAY KM successively from one position to another to make sure that every switch-over, except the first one (from 0 to 20) causes the marker to cover one interval; otherwise repeat adjustments.

27. Set switches located on unit P6:

-CHECK to position MAGNETRON CURRENT (ТОК МАГН.)

-AFC - BEACON to position AFC - OFF.

Press button TRANSMITTER ON (ПЕРЕДАТЧИК ВКЛ.). As a result a red pilot lamp must light up on unit P6.

Set switch RANGE KM to positions "10", "20", "10-70", "100", and "200". Note the readings of meter CHECK on unit P6.

Set switch FREQUENCY to position II and note the readings of meter CHECK again in all positions of switch RANGE KM. For all the ranges the magnetron current should be within 9.5 to 15 mA.

Set switch AFC-BEACON to position BEACON-ON. Note the readings of meter CHECK located on unit P6 in all positions of switch RANGE KM and in both positions of switch FREQUENCY on unit P6.

Notes: 1. Rare (non-systematic) self-disconnections of the transmitter do not indicate that the equipment is defective. Such a self-disconnection has occurred, press button TRANSMITTER ON again and proceed operating.

2. If high voltage is not applied upon pressing button TRANSMITTER ON, check the condition of fuses ПР15-7 and ПР15-11 in distribution box P15.

28. Set switch AFC - BEACON to position AFC - OFF, switch CHECK to position MAIN CRYSTAL CURRENT and rotate knob RECEIVER TUNING in both directions until the meter reads the maximum value. The crystal current must be within 0.4 to 1 mA with the transmitter energized.

Set switch FREQUENCY on unit P6 to position II and check crystal currents on the second channel.

Notes: 1. When energizing the transmitter the currents of the main and AFC crystals are allowed to vary by 0.2 mA.

2. At low temperatures the crystal current may rise to 1.3 mA.

3. At the tuning point the currents of the main and AFC crystals must be not less than 80 per cent of the maximum currents of the crystals.

29. Set switch AFC - BEACON on unit P6 to position AFC - OFF. Turn knob RECEIVER TUNING from one exteme position to the other. In this case the crystal current must reach the maximum value with the knob in the middle position. In the extreme positions of the knob the crystal current may differ from zero. Operate potentiometer AFC VOLTAGE (НАПРЯЖЕНИЕ АПЧ) to obtain the maximum crystal current with knob RECEIVER TUNING in the mid-position.

30. Set switch CHECK on unit P6 to position AFC VOLTAGE with the crystal current at maximum; in this case the meter reading must be 160±30 V.

31. Set switch AFC - BEACON on unit P6 to position AFC - OFF. Rotate knob RECEIVER TUNING from one extreme position to the other. This should cause the AFC voltage to vary within 30 to 40 V.

32. Turn knob RECEIVER GAIN located on unit P4 fully clockwise and make sure that there is clutter on the sweep trace of the indicator after which turn the knob back to the initial position, i.e. fully counter-clockwise.

33. Set switch AFC - BEACON to position AFC - OFF, aim the antenna at the known object or with the antenna rotating tune the equipment to an echo signal from any object by means of control knobs: RECEIVER TUNING on unit P6, RECEIVER GAIN on unit P4, BRIGHTNESS on the indicators. To obtain better display choose optimum positions of switches RANGE KM and ANTENNA TILT. As a result clean echo signals reflected from the objects must appear at certain distances.

34. Set switch AFC - BEACON on unit P6 to position AFC - ON. The presentation of the echo signals on the indicator must be the same as during optimum manual tuning when the switch is set at AFC - OFF.

Place switch CHECK on unit P6 to position MAIN CRYSTAL CURRENT. Rotate knob RECEIVER TUNING all the way in both directions; in this case the pointer of the CHECK meter must be motionless and read the crystal current within 0.4 to 1 mA, and the presentation on the indicator screen should not fade. Check this with switch FREQUENCY in both positions and antenna rotating.

Note: If, during AFC operation after different kinds of change-over (changing over frequency, range, step delay), the AFC voltage appears to be lower than the normal rated value, turn knob RECEIVER TUNING clockwise to bring this value to normal (in this case the voltage is varied by jumps). This operation done, set knob RECEIVER TUNING to the mid-position.

[redacted]

50X1-HUM

35. To check and adjust the range delay, place switch CALIBRATION - OPERATION on unit P3 in position RANGE CALIBRATION (КАЛИБРОВКА ДАЛЬНОСТИ), switch RANGE KM on unit P6 in position "10-70", turn knob "10-70" on unit P6 until 30-40 km. sweep range is obtained.

Turn knob RANGE on unit P6 and watch matching of the range marker with the appropriate calibration markers (on ranges divisible by 2). A divergency of ±100 m. is allowable. If this is not so, adjust the range delay following the procedure below:

(a) Rotate scale RANGE located on unit P6 in the direction from 2 to 30 km., count how many times the range marker is matched with calibration markers on the indicator screen.

(b) Adjust potentiometer RANGE-SCALE on unit P3 to match the lower edge of the range marker with that of the 14th calibration marker on the indicator screen with the RANGE scale set at 28 km.

(c) Set scale RANGE on unit P6 to position "2 km". and match the lower edge of the range marker with that of the first calibration marker on the indicator by adjusting potentiometer RANGE-ZERO on unit P3.

(d) Set scale RANGE on unit P6 to position "28 km". and obtain precise adjustment of the range scale.

(e) Repeat operations indicated in Points b and c a few times to obtain precise adjustment.

(f) Set scale RANGE successively to positions 4, 6, 8, 10, 12, 14, 16, 18, 20, 22, 24, 26, 28 km. and make sure that the range markers are matched with the appropriate calibration markers accurate to ±100 m.

36. Press button TRANSMITTER OFF; in this case the transmitter is not fed with power, the magnetron current is absent, the red pilot lamp on unit P6 goes out.

37. Make sure that there is a sweep trace and range markers on the screen of indicator P8 in the SEARCH mode.

Checking Pulse Duration for Automatic Connection of Optical Sight ОПБ-11р

Apply 220 V, 50 c.p.s. to instrument ИВ-52 via relay contact K7-7 as shown in Fig.179.

Connect one end of the relay winding to terminal 1448 in unit P14, the other - to the body.

Set switches located on unit P9: CALIBRATION to position OPERATION and SPEED GENERATOR to position ON.

Determine the pulse duration by a stopwatch at the moment when lamp SIGHTING BUTTON ON (КНОПКА ВИЗИРОВАНИЯ ВКЛ.) lights up on unit P9. The pulse duration must be within 0.25 to 0.8 microsec.

Checking and Adjustment of Energized Navigator s Equipment

1. Set all the control knobs to the initial positions as shown in Table 34; prior to checking and adjusting the navigator s equipment see that divisiton 6:1, step delay zero and altitude zero of the search part of the equipment are set properly.

2. See that a green pilot lamp labelled SUPPLY ON lights up on unit P9 upon energizing the equipment and adjust the brightness of the pilot lamp by means of a shutter.

3. Adjust the required illumination of the indicator scale by smoothly rotating knob SCALE ILLUMINATION on unit P8. Adjust the required illumination of scales SLANT RANGE CORRECTION M and TRACK SPEED KM/HR located on bomb aimer s panel P9.

4. Set switch ANTENNA TILT on unit P9 first to position UP, then to position DOWN.

Make sure by means of the antenna tilt indicator on unit P6 that the antenna tilts up by 5±1° and down by 25±2°. Set switch ANTENNA TILT to the mid-position when the tilt indicator reads 0° or -2°.

5. Rotate knob BRIGHTNESS smoothly clockwise (located on unit P8), adjust the brightness of PPI display to the required level.

6. Set switch SEARCH - HOMING (ПОИСК-НАВЕДЕНИЕ) located on unit P9 to position HOMING; make sure that the sweep brightness is approximately the same as that in the SEARCH mode.

Note: If there is no sweep trace in the HOMING mode, check in what direction (in azimuth) the antenna is installed and, if need be, adjust the sweep to "0" of the azimuth scale of indicator P5/1.

7. Rotate knob FOCUS on unit P8 to focus the sweep trace so that it may be as thin and contrast as possible.

8. Set switch SEARCH - HOMING located on unit P9 to position SEARCH and make sure that the sweep trace starts from the centre of the light filter. If this is not so, operate knobs HORIZONTAL CENTRING and VERTICAL CENTRING PPI on unit P8 to match the start of the sweep with the centre of the indicator light filter.

9. Rotate knob POSITION on unit P9 clockwise; in this case the sighting pip on the screen of indicator P8 must move from the side of the sweep towards the centre of the screen.

10. Make a horizontal centring of the sweep trace on the screen of indicator P8 in the homing mode following the procedure below:

(a) Set switch SEARCH - HOMING on unit P9 to position HOMING.

(b) Adjust the antenna exactly to "0" of the azimuth scale of indicator P5/1.

(c) Make sure that the sweep trace in the SEARCH mode is exactly coincident with "0" of the azimuth scale and central vertical line on the light filter of indicator P8.

(d) Make sure that the drift angle index of the optical bombsight is exactly coincident with "0" of the drift angle scale on the course stabiliser; if necessary, bring them in precise alignment.

(e) Make sure that the vertical gyro of the optical bombsight is locked, whilst switch AZIMUTH on unit P8 is set at OFF.

(f) Make sure that "0" of the indicator azimuth scale - the central vertical line on the light filter - is matched precisely with the white index on the front of indicator P8; if necessary bring them in line.

(g) Operate knob HORIZONTAL CENTRING to precisely match the sweep trace with the central longitudinal line on the light filter. Matching done, tighten the union nut of the knob.

11. Make a vertical centring of the sweep trace following the procedure below:

(a) Make sure that switch CALIBRATION on unit P9 is set at OPERATION, switch SEARCH - HOMING on unit P9 at HOMING, and switch RANGE KM on unit P6 is set at "10-70".

(b) Set switch AZIMUTH on unit P8 at ON.

(c) Switch on sector scanning; in this case knob POSITION CONTROL on unit P6 must be set at the mid-position.

(d) Match the upper edge of the sighting line with the transverse line of the light filter by smoothly rotating knob VERTICAL CENTRING, B. Care should be taken to bring the sighting line upwards. Tighten the nut of knob VERTICAL CENTRING on unit P8.

[redacted]

50X1-HUM

12. When checking the drift angle compensation circuit proceed as follows:

(a) Set the sweep trace at the course line, place switch COURSE LINE located on unit P6 in position OFF. Bring the scale zero on the screen of indicator P5/1 in line with the sweep trace.

(b) Make sure that the PPI display on the screen of indicator P8 is adjusted to 0°. Turn on and off switch AZIMUTH on unit P8 several times watching simultaneously the homing sweep trace on the indicator screen. The sweep trace must be motionless in relation to the longitudinal axis of the light filter. If it is not, make the B display motionless by changing over switch SEARCH. Make a check with the optical sight (OПБ -11p) adjusted.

(c) Check the horizontal centring.

(d) Turn on switch AZIMUTH located on unit P8.

(e) Turn the antenna through 20° to the right.

(f) Turn the sight toward the antenna until the vertical sweep is coincident with the central longitudinal line of the light filter on indicator P8.

(g) Read off the drift angle from the drift angle scale located on the course stabilizer. The reading must be equal to the antenna turn angle with a tolerance not exceeding ±2°.

(h) Make a similar check when turning the antenna through 20° to the left.

(i) If the value read off the drift angle scale comes beyond the limits of ±2°, check the adjustment of the drift correction potentiometer following the procedure below:

- disconnect cable No. 16 from the altitude unit of sight OПБ-11p;
- set switch AZIMUTH to position ON and make a horizontal centring of the homing sweep on unit P8. Set the sight at zero on the scale of the course stabilizer, lock the gyro;
- connect cable No. 16 to the altitude unit of sight OПБ-11p. The B display on the screen of indicator P8 should be motionless or is allowed to move within ±0.5°. The sweep displacement in excess of ±0.5° testifies to faulty operation of sight OПБ-11p;
- remove the dome;
- turn the antenna through 20° to the right as measured by the scale mounted on a crown gear, turn the sight (OПБ-11p) in the same direction through a drift angle equal to the antenna turn angle and operate potentiometer DRIFT CORRECTION on unit P8 to match the vertical sweep trace with the longitudinal central line on the light filter;
- turn the antenna through 20° to the left and do the same operations as during turning of the antenna through 20° to the right;
- make a check when the drift angles are ± 10°;
- the accuracy when matching the sweep with the longitudinal line on the indicator light filter must be at least ±1°;
- tighten the locking nut of the drift correction potentiometer shaft on unit P8.

13. Check and adjust the bomb side deviation system and bank compensation following the procedure below:

(a) Make sure that the vertical gyro of sight OПБ-11p is locked.

(b) Set all the controls on sight OПБ-11p to positions indicated in Table 35.

Positions of Controls on OПБ-11p Sight with Corresponding Antenna Turn Angle by Scale Mounted on Crown Gear of Antenna

Table 35

No.	Antenna turn angle (drift angle +φ side)	Lag, %	Sighting angle, degrees	φ side	Drift angle, degrees
1	+22°30'	51	45	7°30'	+15
2	-22°30'	51	45	7°30'	-15
3	+25°	25.5	45	5°	+20
4	-25°	25.5	45	5°	-20

(c) Turn the antenna through drift angle + φ_{side} (degrees) to the right (or left).

Note: The antenna turn angle is taken from column DA + φ_{side} in Table 35.

(d) Turn the sight to follow the antenna until the sweep trace is matched with the central longitudinal line of the light filter of indicator P8 and at the moment of matching note the reading of the drift angle index of sight OПБ-11p on the drift angle scale. The drift angle value should correspond to that specified in Table 35 with a tolerance not exceeding ±2°.

(e) Make a similar check of all the drift angles given in Table 35.

If the drift angle value does not correspond to that given in Table 35 (with a tolerance of ±2°), adjust the transverse stabilization as follows:

-turn the antenna through angle DA + φ_{side} as measured by the scale mounted on a crown gear of the antenna as indicated in Table 35;

-turn the optical sight to follow the antenna through a drift angle (Table 35) corresponding to the antenna turn angle DA + φ_{side};

- rotate potentiometer TRANSVERSE STABILIZATION (ПОПЕРЕЧН. СТАБ.) on unit P8 to match the sweep trace with the central longitudinal line of the light filter;

-make a check of all drift angles indicated in Table 35. Accuracy in matching the sweep with the longitudinal line on the light filter should be at least ±1.5°;

-tighten the locking nut of the shaft of potentiometer TRANSVERSE STABILIZATION on unit P8;

-place the antenna dome in position.

14. To adjust zero and range scale proceed as follows:

(a) Set the controls to the positions indicated in Table 36.

(b) Energize the transmitter.

(c) Turn the slant range correction scale clockwise if the sighting marker is above the calibration marker and counter-clockwise if the sighting marker fails to reach the calibration marker. See that the lower edge of the sighting marker is coincident with that of the calibration marker. The reading of the slant range correction scale must be within 0±15 m. If the scale readings exceed the tolerance make an adjustment by means of knob RANGE ZERO ADJUSTMENT on unit P3. This should be done as carefully as possible while matching the lower edge of the sighting marker with the lower edge of the calibration marker. In this case the readings of the slant range correction scale approximate zero despite the existing tolerance.

(d) Shift switch CALIBRATION on unit P9 to position RANGE, adjust the slant range correction scale to 0.

(e) Set switch SEARCH - HOMING to position SEARCH and make sure that the sighting marker is close to the fourteenth 2-km. calibration marker or matched with it.

[redacted]

50X1-HUM

(f) Shift switch SEARCH - HOMING back to position HOMING, turn the slant rang correction scale and make sure that the sighting marker is matched with the calibrati marker on the screen of indicator P8 when the slant range correction scale reads within 0 to 100 m. If this is not so, operate potentiometer RANGE SCALE on unit P9 t make adjustment until the sighting marker is properly matched with the calibration marker. If the sighting marker fails to reach the 14th calibration marker, turn th potentiometer knob clockwise. If the sighting marker overpasses the 14th calibration marker, rotate the potentiometer knob counter-clockwise.

Table 36

Initial Positions of Controls on Units
of Bombsight PBП-4 and OПБ-11p when Adjusting
Zero and Range Scale

Unit	Controls	Position
Bomb aimer s panel P9	Switch CALIBRATION	RANGE ZERO
	Switch SEARCH - HOMING	HOMING
	Switch SPEED GENERATOR	OFF
	Slant range correction scale	0
Optical sight OПБ-11p	Scale ALTITUDE on computer	14 km.
	Scale SIGHTING ANGLE	60°
	ON -OFF switch on altitude unit	OFF
Navigator-operator s panel P6	Switch RANGE KM	10-70
	Knob "10-70"	Turn knob until 30-km. swe is obtained
Range unit P3	Switch CALIBRATION - OPERATION	Range CALIBRATION
Lock unit P4	Knob RECEIVER GAIN	Extreme counter-clockwise position

(g) Set switch CALIBRATION on unit P9 back to position RANGE ZERO and operate knob RANGE ZERO ADJUSTMENT to match the sighting marker with the calibration marke. The above adjustment should be made until the sighting marker is fully coincid with the calibration marker.

Note: During calibration when matching the calibration marker with sighting marker at 28th kilometre, keep them at a distance equal to half the maximum error.

15. To check the accuracy of slant range injection proceed as follows:

(a) Set the controls in positions indicated in Table 37.

Table 37

Initial Positions of Controls on Units of
Bombsights PBП-4 and OПБ-11p when Checking
Accuracy of Slant Range Injection

Unit	Controls	Position
Bomb aimer s panel P9	Switch CALIBRATION	RANGE
	Switch SEARCH - HOMING	HOMING
	Switch SPEED GENERATOR	OFF
	Slant range correction scale	0
Navigator-operator s panel P6	Switch RANGE KM	10-70
Range unit P3	Switch CALIBRATION-OPERATION	Range calibration
Lock unit P4	Knob RECEIVER GAIN	Extreme counter-clockwise position
Optical sight OПБ-11p	ON - OFF switch on altitude unit	OFF

(b) Set scales ALTITUDE and SIGHTING ANGLE on optical sight OПБ-11p alternately at the values indicated in Table 38.

Table 38

Position of Controls on Bombsight OПБ-11p
when Checking Accuracy of Slant Range Injection

No.	Altitude H, m.	Sighting angle, degrees	Slant range, km.
1	2000	0	2
2	4000	0	4
3	6000	0	6
4	8000	0	8
5	10,000	0	10
6	12,000	0	12
7	14,000	0	14
8	16,000	0	16
9	9848	10	10
10	9397	20	10
11	10,392	30	12
12	10,725	40	14
13	10,284	50	16
14	11,000	60	22
15	12,000	60	24
16	14,000	60	28
17	16,000	60	32

Notes: 1. During range calibration the altitude should be set by means of knob ALTITUDE on the computer. When the flight altitude exceeds 14,000 m.

[redacted]

make calibration setting the altitude by the altitude potentiometer located on the altitude unit having placed the ON - OFF switch on the altitude unit in position ON.

2. Rotate scale SIGHTING ANGLE in the direction from larger to smaller angles.
3. Rotate the slant range correction scale counter-clockwise until the lower edge of the sighting marker is matched with that of 2-km. calibration marker on the screen of indicator P8.

The readings on the slant range correction scale for all the points given in Table 38 should not differ by more than ± 100 m.

Note: If the bomb dropping height is known, the data for check on range calibration may be taken from Table 39.

Table 39

Bomb Dropping Slant Range

Flight altitude H, m.	Altitude set on sight ОПБ-11р	Sighting angle, degrees	Bomb dropping range, m
6000	6087	41	8000
	6018	53	10,000
	6000	60	12,000
8000	7988	37	10,000
	8029	48	12,000
	8030	55	14,000
	8000	60	16,000
10,000	9948	34	12,000
	10,070	44	14,000
	10,068	51	15,000
	10,062	56	18,000
	10,000	60	20,000
12,000	12,000	31	14,000
	12,075	41	16,000
	12,043	48	16,000
	12,036	53	20,000
	11,976	57	22,000
	12,000	60	24,000
14,000	13,993	29	16,000
	13,987	39	18,000
	13,894	46	20,000
	14,137	50	22,000
	14,107	54	24,000
	14,159	57	26,000
	14,000	60	28,000

16. To adjust the speed zero proceed as follows:

(a) Set the controls to the positions indicated in Table 40.

Table 40

Initial Positions of Controls when Adjusting Speed Zero

Unit	Controls	Position
mb aimer's panel P9	Switch CALIBRATION	SPEED ZERO (НУЛЬ СКОРОСТИ)
	Switch SEARCH - AIMING	AIMING
	Switch SPEED GENERATOR	OFF
	Slant range correction scale	0
	Scale TRACK SPEED	Any
	Knob POSITION	Extreme counter-clockwise position
vigator-operator's panel P6	Switch RANGE KM	10-70
lock unit P4	Knob RECEIVER GAIN	Extreme counter-clockwise position

(b) Shift switch SPEED GENERATOR to position ON.

(c) Rotate knob POSITION clockwise, bring the calibration marker to the horizontal line on the indicator light filter. Note position of the calibration marker one minute after it has been matched with horizontal line on the light filter. The marker is allowed to displace by not more than the length of its diameter. If the displacement of the calibration marker is in excess of its diameter, make an adjustment of the speed zero.

(d) Turn knob SPEED ZERO ADJUSTMENT located on unit P9 counter-clockwise, if the calibration marker crawls up the horizontal line on the light filter. Turn the knob clockwise, if the calibration marker crawls down the horizontal line on the light filter.

Make a check again to make sure that the marker's crawl does not exceed the length of its diameter for one minute.

17. To adjust the speed scale proceed as follows:

(a) Set the controls to the positions indicated in Table 41.

Table 41

Initial Positions of Controls when Adjusting. Speed Scale

Unit	Controls	Position
mb aimer's panel P9	Switch CALIBRATION	SPEED (СКОРОСТЬ)
	Switch SEARCH - AIMING	AIMING
	Switch SPEED GENERATOR	OFF
	Knob POSITION	Extreme counter-clockwise position
	Scale TRACK SPEED	1200
vigator-operator's panel 6	Switch RANGE KM	10-70
lock unit P4	Knob RECEIVER GAIN	Extreme counter-clockwise position

[redacted]

(b) Turn on switch SPEED GENERATOR not less than 30 sec. after setting of the controls. Watch the movement of the calibration markers on the screen of indicator P8. Pass first 5 calibration markers, start the stopwatch at the moment of passage of the 5th calibration marker and stop it at the moment when the 10th marker passes the preset sighting marker.

(c) Adjust potentiometer SPEED SCALE so that the passage time of the five 2-km. calibration markers may be within 30±6 sec.

(d) Check the time taken by the five 2-km. calibration markers to pass the presighting marker for the following speeds: 1200, 900, 600, 300 km/hr.

The passage time of the five 2-km. calibration markers for the above-mentioned speeds should correspond to the time indicated in Table 42.

Table

Passage Time of 2-km. Calibration Markers
for Various Speeds

Speed, km/hr	300	600	900	1200
Time, sec.	120±2.4	60±1.2	40±0.8	30±0.6

18. To check the change to the operating conditions from optical sight OПБ-1lp, proceed as follows:

(a) Set the controls to the positions indicated in Table 43.

Table 4

Initial Positions for Controls when Checking
Change to Operation from Optical Sight OПБ-11p

Unit	Controls	Position
Bomb aimer's panel P9	Switch CALIBRATION Switch SEARCH - HOMING Switch SPEED GENERATOR Knob POSITION	OPERATION SEARCH OFF Extreme counter-clockwise position
Navigator-operator's panel P6	Switch RANGE KM Knob 10-70 Knob RANGE MARKER BRIGHTNESS	10-70 Extreme clockwise position Turn clockwise until range markers appear
Range unit P3	Switch CALIBRATION - OPERATION	OPERATION
Optical sight OПБ-11p	Scale SIGHTING ANGLE Scale ALTITUDE	60° 14 km.
Lock unit P4	Knob RECEIVER GAIN	Extreme counter-clockwise position

(b) Turn on switch SPEED GENERATOR located on unit P9. Rotate knob POSITION clockwise to make sure of the change to operation from optical sight OПБ-11p by the lighting up of the red lamp on unit P9 and green lamp on unit P8. See that the change to the main synchronizing takes place at a distance of 28 km.

19. To check the bomb drop warning signal follow the procedure below:

(a) Set the controls to the positions indicated in Table 44.

Table 44

Positions of Controls when Checking Bomb
Drop Warning Signal

Unit	Controls	Position
Bomb aimer's panel P9	Switch CALIBRATION Knob POSITION Switch SPEED GENERATOR	OPERATION Extreme clockwise position ON
Optical bombsight OПБ-11p	Sighting angle index Aiming angle index Scale ALTITUDE ON COMPUTER (ВЫСОТА НА РЕШАЮЩЕМ ПРИБОРЕ) ON - OFF switch on altitude unit Knob AUTOMATIC DROP (АВТОСБРОС)	70° 40° 14 km. OFF Cocked

(b) Energize the optical bombsight.

(c) Rotate the sighting knob located on the optical bombsight to make sure that the red lamp lights up on unit P8.

CAUTION: Prior to making a check, cut out the circuit-breakers of the bomb doors.

The check should be made on permission of the aircraft armament specialist.

20. When checking the quality of presentation in the HOMING mode proceed as follows:

(a) Set the controls to the positions indicated in Table 45.

Table 45

Initial Positions of Controls when Checking Quality
of Presentation in HOMING mode

Unit	Controls	Position
Navigator-operator's panel P6	Switch RANGE KM Switch SECTOR SCANNING	10-70 ON
Bomb aimer's panel P9	Switch SEARCH - AIMING Switch CALIBRATION	SEARCH OPERATION
Optical bombsight	Sighting angle index	0°

[redacted]

(b) Obtain the target presentation on the indicator screens as instructed in Points 33 and 34 of Section "Checking and Adjustment of Live Equipment of Navigator-Operator".

(c) Operate knob ALTITUDE on the optical bombsight to bring the sighting marker under the target visible on the screen of indicator P8.

(d) Change to AIMING mode and make sure that the objects are visible on the screen of indicator P8.

21. To deenergize the equipment proceed as follows:

(a) Set the controls to the initial positions indicated in Table 34.

(b) Switch on the transmitter and the supply of radar bombsight PHB-4.

(c) Open circiut-breaker A3C-20 "Radio Sight" located on the circuit-breaker panel of the operator s cabin.

Postflight Inspection and Checking of Equipment

The postflight inspection and checking of the equipment are the main preventive maintenance jobs the aim of which is to ensure normal operation of the equipment.

when making a postflight inspection and check, proceed as follows:

1. Obtain information as to operation of the equipment in flight from the navigator-operator and aircraft navigator.

2. Inspect the equipment visually, check the tightness of the plug connectors, fastening of the cables to the aircraft sides, fastening of the units; check bonding of the units. Give special attention to the condition of the bunched cables and their screening.

3. Check reliability of operation of all the switches, interlocking contact in distribution box P15 with the radar bombsight supply off. Check for presence of spare fuses, spare valve complement and tools, replenish the complement with missing fuses and valves.

4. Make an entry into the Log as to all troubles revealed by inspection. Do not eliminate troubles until the inspection is finished.

5. Eliminate all the troubles located in flight and during inspection. The trouble eliminated, check the live equipment following the above technique.

6. Make an entry into the radar bombsight Service Log as to replacement of components.

Elimination of Possible Troubles

Troubles in the equipment are most frequently caused by the burning out of fuses, poor tightening of plug connectors, breaks or shorts in junction cables or wires.

Sometimes wrong setting of the control knobs is misleading. Therefore, when finding the cause of trouble in the equipment it is necessary first of all to carefully inspect the units and junction cables, tighten the nuts of the connectors, if necessary, check the condition of fuses and position of the controls. The defective units should be replaced in succession by good ones; if the cause of trouble is not revealed, find which unit is defective.

If, for any reason, the defective unit should be replaced in the given station, make complete adjustment and calibration of the equipment .

Troubles and Remedies

Trouble	Probable cause	Remedy
1	2	3
m 115 V A.C. are applied (illumination lamps do not ure, check instrument does not read 115 V, 400 c.p.s., valves are not heated)	Blown fuse CD-15A in fuse distribution box of navigator-operator. No contact in interlock button of unit P15	Replace fuse CD-15A in fuse distribution box of navigator-operator. Press interlock button with hand
Voltages -300 V, +300 V, +400 V cannot be applied	Blown fuse Пр15-4 in unit P15	Replace fuse Пр15-4
Voltages +300 V and +400 V are absent (very bright and wide spot existing on indicators, brightness and focus are not adjustable)	Defective valves Л11-1, Л11-2 and Л11-3 in unit P11	Replace defective valves in unit P11
No voltage of - 300 V	Defective valves Л11-5 Л11-13, Л11-14 in unit P11	Replace defective valves in unit P11
Voltage of ±300 V is unadjustable or unstable	Defective valve Л11-4 in unit P11	Replace defective valve in unit P11
Voltage of +400 V is too high or low	Defective valve Л11-1, Л11-2, Л11-3 in unit P11	Replace defective valves in unit P11
Fan motors fail to operate in units P2 and P12	Break of supply wires running to motors or defective motors	Eliminate trouble in supply wires of motors. 27 V D.C. must be across terminal 1304 in unit P13
Indicator P5/1 scale is not illuminated, valves of unit P4 are not heated	Blown fuse Пр15-2 in unit P15	Replace fuse in unit P15
Indicator P5/1 scale is not illuminated	Burned out scale illumination valves or short circuit in sockets	Replace blown out valves
Scale of indicators P5/2, P8 is not lighted, valves of unit P7 are not heated	Blown fuse Пpu15-6 in unit P15	Replace fuse in unit P15
No sweep and electronic spot on all indicators	(a) Blown fuse Пр15-5 in unit P15	Replace fuse
	(b) Defective valve Л10-1 in unit P10	Replace defective valve
No sweep on one indicator	Burned out filament in cathode-ray tube	Replace cathode-ray tube

[redacted]

50X1-HUM

1	2	3
Too bright and too wide spot (sweep trace), brightness is uncontrollable by knob BRIGHTNESS	+300 V are not applied to indicator (no contact in ball-type connector, break of wire in +300 V circuit)	Restore contact, eliminate trouble in +300 – V circuit
No sweep existing on indicators P5/2 and P8	Blown fuse Пр15-6 in unit P15	Replace fuse
No sweep existing on indicator P5/2	Defective valve Л4-26 in unit P4	Replace valve Л4-26
No sweep existing on indicator P8 in SEARCH	Defective valve Л4-27 in unit P4	Replace defective valve
No sweep on all range bands, but there is sharply focused spot in centre of indicator screen	(a) Blown fuse Пр15-1 or Пр15-2 in unit P15 (b) Defective valve Л3-4 in unit P3 (c) Defective valves Л4-20, Л4-21 and Л4-22	Replace fuse Пр15-1 or Пр15-2 Replace defective valve Replace defective valves
Sweep trace and blurred range markers on all indicators are generated	(a) Defective valve Л4-19 in unit P4 (b) Wrong repetition frequency	Replace defective valve Check frequency division 5:1 and 6:1, adjust with potentiometers CHECK OF FREQUENCY 5:1 and CHECK OF FREQUENCY 6:1 on unit P3
Antenna fails to rotate when switch ROTATION on unit P6 is set at ON	Blown fuse Пр15-12 in unit P15	Replace fuse in unit P15
Antenna rotates continuously when switch SECTOR SCANNING is set at ON	Blown fuses Пр15-13 and Пр15-14 in unit P15	Replace fuses in unit P15
Antenna is motionless when switch SECTOR SCANNING is turned on	Blown fuse Пр15-12 in unit P15	Replace fuse in unit P15
No range markers and clutter on indicators	One of valves Л4-9, Л4-10, Л4-11, Л4-12 is defective in unit P4	Replace defective valve
There are range markers, but no clutter on indicators	One of I.F. amp. valves Л4-1, Л4-2, Л4-3, Л4-4, Л4-5, Л4-6, Л4-7, Л4-8 in unit P4 is defective	Replace defective valve
There are no range markers on indicators	Defective valve Л3-3 in unit P3	Replace defective valve
There is no range marker on indicators	One of valves Л3-10, Л3-11, Л3-12 in unit 3 is defective	Replace defective valve
No crystal current when switch AFC - BEACON on unit P6 is set at AFC-ON	No voltage of -300 V (defective valve Л11-15)	Replace defective valve Л11-15 in unit P11

1	2	3
Pointer of meter CHECK on unit P6 is motionless, while is should swing	Defective valve Л4-17 in AFC circuit in unit P4	Replace defective valve
Transmitter-receiver P2 cannot be energized	(a) Apparatus had not time to warm up (b) Blown fuse Пр15-7 or Пр15-11 in unit P15	Allow apparatus to warm up Replace defective fuse
Weak or no target presentation when knob AFC - BEACON is set at AFC - ON	Defective valves Л4-13, Л4-14, Л4-15, Л4-16 in AFC circuit of unit P4	Replace defective valves in unit P4. Rotate potentiometer AFC VOLTAGE on unit P4 until target presentation is bright and knob RECEIVER TUNING until lamp burns bright
There is no sweep on screen of indicator P8 in SEARCH and HOMING modes	Blown fuse Пр15-6 of connection box P15 in unit P15. Therefore 115 V are not fed to unit P14	Replace fuse Пр15-6 in unit P15
There is no sweep on screen of indicator P8 in HOMING mode	Defective valve Л7-1 of square-pulse generator in unit P7	Replace defective valve
Short B display on screen of indicator P8	Defective valve Л7-9 or Л7-10 in sweep amplifier of unit P7	Replace defective valve
Scale of indicator P8 is not lighted	Blown fuse Пр15-10 in unit P15	Replace defective fuse
Pilot lamp SUPPLY ON located on unit P9 fails to burn	Blown fuse Пр15-10 in unit P15	Replace defective fuse
There is no target presentation on screen of indicator P8 both in SEARCH and HOMING modes with target presentation on screens of indicators P5/1 and P5/2	Defective video amplifier valve Л7-21, Л7-22, or Л7-32 in unit P7	Replace defective valve

MEASUREMENT OF RADIO NOISE LEVEL

General Instructions

1. Prior to measuring the radio noise level make sure that:

(a) The performance of the radio equipment and noise sources on board the aircraft is checked and complies with Specifications.

(b) Bonding of the aircraft, especially of radio facilities and noise sources, is checked and complies with Specifications.

(c) All temporary wiring systems and check instruments (oscillographs, recorders, etc.) are disconnected.

[redacted]

50X1-HUM

(d) Sensitivity of the receivers is measured.

2. When measuring radio noise observe the following conditions:

(a) Have the aircraft positioned outside the zone of manmade interference.

(b) Measure radio noise when the level of atmospheric and industrial noise does not exceed the permissible level for the given receiver in line with its sensitivity.

(c) The aircraft mains should be powered from a storage battery of at least 500 a.h. capacity.

(d) The supply voltage of the aircraft mains should be 27.5 to 28 V D.C. and 112 to 116 V, 400 c.p.s. A.C.

Note: The supply voltage of the aircraft mains should be checked by the meters on the operator's panel.

CAUTION: 1. The aircraft mains may be fed by an airfield generator, provided the generator noise level does not exceed the permissible value for the given receiver.

2. The permissible level is allowed to rise on account of atmospheric and industrial noise at one or two points over the band to be measured, provided the main clutter is clear against the background of atmospheric clutter (upon switching on the noise source the output voltage of the receiver rises).

3. Depending upon the receiver sensitivity the rise of the measured noise level above the permissible value for the given receiver is determined by formula:

$$U_{rec.perm.} = \frac{U_{rec.}}{E_{rec.}}$$

which $U_{rec.perm.}$ = the permissible noise level at the receiver output, V;
$U_{rec.}$ = the permissible noise level at the receiver output for sensitivity $E_{rec.}$ = 1 microvolt. For receivers YC-9 and APK-5 $U_{rec.}$ = 18.5 V, for PCHY-3M $U_{rec.}$ = 37 V;
$E_{rec.}$ = the receiver sensitivity at a frequency of interference to be measured, microvolts.

4. To facilitate determination of the noise level allowable at the output of receivers YC-9, APK-5 and PCHY-3M use is made of the diagram of Fig.180 and Table 46 made up according to the above formula.

Table 46

Permissible Noise Levels at Output of Receivers YC-9, APK-5 and PCHY-3M Depending upon Receiver Sensitivity

Receiver sensitivity, microvolts	Permissible noise level (V) at outputs of receivers	
	YC-9,APK-5	PCHY-3M
1	2	3
1.0	18.5	37
1.1	16.8	33.6
1.2	15.4	30.8
1.3	14.2	28.4
1.4	13.2	26.4
1.6	11.6	23.2
1.8	10.3	20.6
2.0	9.3	18.6
2.2	8.4	16.8
2.5	7.4	14.8
2.7	6.9	13.8
3.0	6.2	12.4
3.2	5.8	11.6
3.5	5.3	10.6
3.7	5.0	10.0
4.0	4.6	9.2
4.5	4.1	8.2
5.0	3.7	7.4
5.6	3.3	6.6
6.0	3.1	6.2
7.0	2.7	5.4
8.0	2.3	4.6
10.0	1.85	3.7

5. The possible sources of noise on the aircraft are listed in Table 47.

Table 47

Possible Sources of Noise and Receivers at Output of which Noise is Heard

Source of noise	Operating duty of noise source during measurements	Receivers acted on by noise	Nature and amount of noise (in case of defective screening, bonding and filtering)	Remedy
1	2	3	4	5
PБH-4	Transmission on range 10-70	YC-9ДМ	Hum of about 1300 c.p.s. frequency is most loudly heard at tuning frequencies 4.5 - 6.0 Mc/s of the receiver YC-9ДМ	Bring to normal the screening of the units and cables of noise sources and receiver
			The permissible level is exceeded 2 - 4 times	Replace defective filters
ШPC-1	When switching on hight voltage	YC-9	Same	Same

[redacted]

50X1-HUM

1	2	3	4	5
АП-52М	When changing over control wheels	УС-9 and УС-9ДМ	Periodical crackling most loudly heard at frequencies 3.0 - 5.0 Mc/s. The permissible level is exceeded 2 - 2.5 times.	Same
ДВ-3,МВ-650,set "107", У-600	Normal operation	УС-9	Crackling over a frequency band of 3 - 9 Mc/s. The permissible level is exceeded 3 - 4 times at separate points of the band	Bring screening and bonding to normal. Clean the motor commutators
РСНУ-3М	Transmission on crystals A76, A172 and others	КРП-Ф	Deflection of indicator НОП-48 pointer by 1 - 2 mm when the aircraft flies on route and pointer swing toward zero mark when the aircraft is off the course line	Do not operate set РСНУ-3М in the TRANSMISSION mode in presence of interference from РСНУ-3М during landing by localizer receiver
РВ-2	During operation on the second band	СД-1	Locking by signals from radio altimeter РВ-2, change of readings of indicator ИРА-50, stopping of locking, unstable operation	Bring to normal the bonding and screening of the units and cables of radio altimeter РВ-2 and range finder СД-1, replace filters ВЧФ-2
РВ-17		СД-1	Same	Same

Measurement of Noise at Output of Receivers

УС-9 and УС-9ДМ

CAUTION: 1. Noise at the output of receiver УС-9ДМ should be measured through the interphone set of the right pilot, whilst at the output of receiver УС-9 through the set of the radio operator. In this case turn knob LOUDER (ГРОМЧЕ) on the interphone sets should be turned to a maximum (fully clockwise). Connect a pair of high-resistance earphones TA-4 and output meter, type МВ-4, (Fig.181) to the output plug connector of the interphone set.

2. During noise measurements the switches of the other interphone sets should not be placed in the same positions as the switches on those sets through which the noise is measured.

3. Tune and fix on the AFC channels of transmitter 1-РСБ-70М the following frequencies:

No. of channel	7	8	9	10	11
Frequency, Mc/s	3.0	5.6	9.0	12.8	17.2

1. Before attempting to measure noise set the receiver knobs to positions AFC,
AGH, CRYSTAL OFF, and the volume control - at maximum.
2. Tune transmitter 1-РСБ-70М to a frequency of 3.0 Mc/s (the 7th channel).
3. Tune receiver УС-9 (or УС-9ДМ) to a frequency of 3.0 Mc/s by the maximum
deflection of the pointer of meter МВ-4 and maximum volume of atmospheric noise in
the earphones.
Set the antenna adjustment knob at maximum sensitivity of the receiver by the
maximum volume of atmospheric noise in the earphones.
4. Measure the atmospheric noise voltage at the output of receiver УС-9
(or УС-9 ДМ).
5. Set the noise sources to be checked (РПБ-4 and ПРС-1, АП-52М and others)
for normal operating conditions separately or simultaneously (if it is found neces-
sary), measure the level of noise generated by them.
6. Repeat the operations indicated in Points 2, 3, 4 and 5 on tuning frequencies
of УС-9 and РСБ-70М: 5.6, 9.0, 12.8 and 17.2 Mc/s.
7. If there is noise due to operating radio stations on the frequencies fixed
by automatic tuning of station 1-РСБ-70М and it is necessary to determine the
frequency of the maximum noise the receiver and transmitter should be tuned as
follows:
(a) Tune receiver УС-9 (УС-9ДМ) to a frequency as close as possible to the
frequencies indicated in Points 3 and 6, but free from the radio station noise (or
any other frequency, for instance, to a frequency of the loudest noise), adjust the
receiver antenna according to Point 3.
(b) Change over the automatic tuning of station 1-РСБ-70М to position MANUAL
TUNING (РУЧНАЯ НАСТРОЙКА). Set knobs А, Б, Г and Д to positions corresponding to
the tuning frequency of receiver УС-9: course - against the table of tuning of station
1-РСБ-70М (the table is supplied with every transmitter), fine - by the maximum deflec-
tion of the output meter pointer and maximum volume of noise in the earphones.
(c) Measure the noise level according to Point 5.

Measurement of Noise at Output of Radio

Compass APK-5

CAUTION: 1. Noise at the output of radio compass receiver APK-5 Nos 1 and
2 should be measured through the interphone set of the navigator. In this
case set the knob marked LOUDER (located on the interphone set) for maximum
volume, and the function switch to position ADD. BOARD (ДОП/МТ). Set the
switch of the additional board to position APK-1 or APK-2. Connect a pair
of earphones, type TA-4, and output meter МВ-4 to the output of the interphone
set.

2. During measurements of noise at the output of the radio compass
make sure that other interphone sets are not in position ADD. BOARD.

1. Set the function switch on the radio compass panel to position ANTENNA,
knob VOLUME at maximum. Tune the radio compass to a frequency of 500 Kc/s, short
terminals ANTENNA - EARTH (АНТЕННА - ЗЕМЛЯ). Operate control RECEIVER GAIN on the
front panel of the radio compass to set the noise level at the output at 20 V.
Unshort terminals ANTENNA - EARTH of the radio compass receiver.

[redacted]

50X1-HUM

2. Tune the radio compass to 250 Kc/s frequency short terminals ANTENNA - EARTH of the radio compass receiver, operate the volume control located on the radio compass panel to set the noise level at the output at 2 V. Unshort terminals ANTENNA- EARTH of the receiver and measure the level of atmospheric noise at the output of the radio compass.

3. Energize the noise sources to be checked (РЕП-4, СРЗ and others) separately or simultaneously (if this proves to be necessary) and measure the level of noise generated by them.

4. Repeat the operations indicated in Points 2 and 3 on medium frequencies of the second and third bands of the radio compass - 500 and 1000 Kc/s, or on any other frequencies on which the noise level should be measured (for instance, on the frequency of the loudest noise).

5. Check against course indicator УКДБ-1 the effect of noise on the operation of the compass portion of radio compass APK-5 during reception of weak signals (from remote radio stations).

Measurement of Noise at Output of Receiver
of Radio Set PCHY-3M

CAUTION: Noise at the output of receiver PCHY-3M should be measured through the interphone set of the pilot. In this case set knob LOUDER on the interphone set for maximum volume, and the function switch to position USW RADIO SET (УКВ/РС).

1. Set the volume control located on the panel of receiver No. 1 at maximum (to position Г), switches 1 and 2 to position "1". Set the sensitivity control on the front panel of the receiver at maximum sensitivity. Switch off the noise limiter.

2. Measure the level of atmospheric noise on each channel of the receiver (No.1).

3. Energize the noise sources to be checked in normal operating conditions simultaneously or separately (if necessary) and measure the level of noise generated by them on each channel of the receiver.

4. Press the throat microphone button and measure the noise of the radio set operation at the monitoring output on each channel (400 c.p.s. hum).

Measurement of Noise at Output of Aircraft Interphone
System СПУ-10

CAUTION: Noise at the output of the interphone system is measured through the interphone set of the operator by output meter ИВ-4.

1. Place the gain controls of the amplifiers in the position marked with a white line.

2. Energize receivers УС -9, УС-9ДМ, APK-5 Nos 1 and 2, PCHY-3M, tune them to well-heard radio stations, operate the volume controls of the receivers to set the output voltage of the signals from the radio stations to be received at 30 V.

3. Place the switches of all the interphone sets in positions NETWORK No. 1 and INTERPHONE, turn the volume control fully clockwise, connect a pair of earphones TA-4 to each set.

4. Measure the noise level during simultaneous operation of all the receivers. The noise level at the output of the interphone system should not exceed 0.4 V.

When monitoring any of the receivers it is allowed that the operation of the interphone system and other receivers not connected to the output of the interphone set being checked is slightly heard. The monitoring voltage should not exceed 0.4 V

the receiver deenergized, which corresponds to the given position of the ction switch of the interphone set being checked).

Note: In order to detect electrical units - sources of high noise level-if the noise level exceeds the permissible one, monitor and measure the voltage of noise from each unit separately in all positions of the function switches on the interphone sets.

5. Repeat the operation indicated in Point 4 for position NETWORK No. 2.

6. Measure the hum voltage with the interphone button pressed and released ing operation of the electrical unit permanently acting in the aircraft. The hum ge should not exceed 0.4 V.

Operation of Electrical and Radio Facilities

When measuring the noise generated by the electrical units, the unit must te under normal operating conditions.

hen measuring the noise generated by the radio facilities, these facilities ld be operated at the main operating frequencies and ranges most commonly used ing simultaneous operation with the receivers which are acted upon by the given ise sources. Switching on and tuning of the radio facilities is done according the Manufacturers instructions.

When measuring the noise generated by the electrical equipment of the tail and ster installations, it is necessary to release the action switch, set the sight the predetermined angle within the working control zone of the respective installa- (the installation when matched with the sight does not get on the limit stop) having pressed the action switch, make a change-over. After the installation fully matched with the sight make another change-over toward the other side (in planes at a time). In this case note the noise level on the output meter В4) connected to the output of receiver УС-9 ignoring separate short-time peaks e pointer kicks).

The given angle of the sight should be set and the action switch pressed at command of a person making noise measurements.

Do not measure the noise when the installations are operated in continuous rming conditions (swinging of the sights within greater limits (more than 10 15°) at a frequency of 2 - 3 oscillations per second as not complying with normal rating conditions).

[redacted]

50X1-HUM

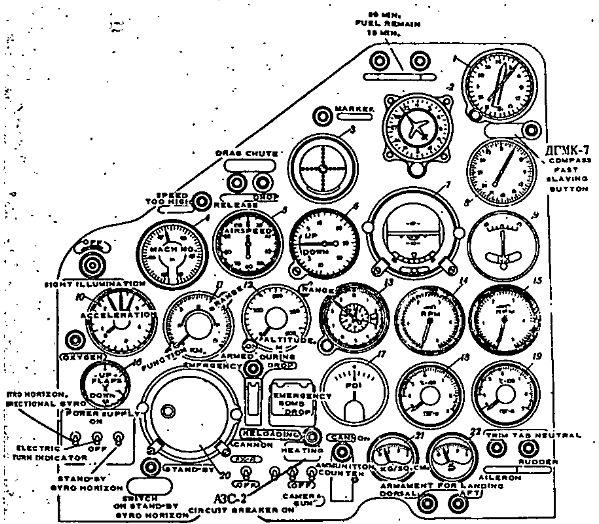

FIG. 1. Left-Seat Pilot Instrument Board

1- Indicator of ДГМК-7 remote-reading gyromagnetic compass; 2 – Indicator of ГПК-52 directional gyro; 3 – ПСП-48 ILS indicator; 4 – МС-1 machmeter (with warning light); 5 – КУС-1200 airspeed indicator; 6 – ВАР-30-3 rate-of-climb indicator; 7 – АГБ-2 gyro horizon; 8 – БСУП-1 indicator of АРК-5 radio compass No. 1; 9 – ЭУП-53 turn indicator; 10 – АМ-10 accelerometer; 11 – РД-1 range finder indicator; 12 – РВ-2 low-altitude radio altimeter indicator; 13 – ВД-20 altimeter, 14 – indicator of left-hand engine tachometer, type ТЭ5-2; 15 – indicator of right-hand engine tachometer, type ТЭ5-2; 16 – УЗП-47 flap position indicator; 17 – pilot director indicator (PDI); 18 – ТВГ-11 exhaust gas temperature indicator of left-hand engine; 19 – ТВГ-11 exhaust gas temperature indicator of right-hand engine; 20 – АГБ-2 stand-by gyro horizon; 21 – ЭДМУ-3 fuel pressure gauge; 22 – ЭДМУ-3 fuel pressure gauge.

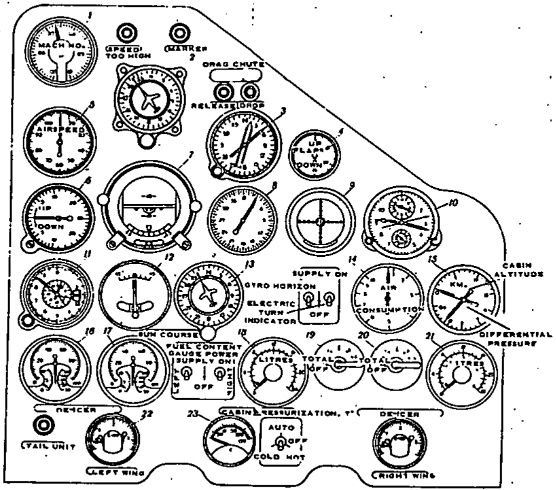

Fig. 2. Right-Seat Pilot Instrument Board

1 – МС-1 machmeter; 2 – indicator of ГПК-52 directional gyro; 3 – indicator of ДГМК-7 remote-reading gyromagnetic compass; 4 – УЗП-47 flap position indicator; 5 – КУС-1200 airspeed indicator; 6 – ВАР-30-3 rate-of-climb indicator; 7 – АГБ-2 gyro horizon; 8 – БСУП-1 indicator of АРК-5 radio compass No. 2; 9 – ПСП-48 ILS indicator; 10 – АЧХО clock; 11 – ВД-20 altimeter; 12 – ЭУП-53 turn indicator; 13 – indicator of ДАК-ДВ-5 set; 14 – indicator of РВУ-46У air flowmeter; 15 – УВПД-15 cabin altimeters; 16 and 17 – ЭМИ-3Р gauge unit indicators; 18 – fuel content gauge indicator of СЭТС-60Д set; 19 and 20 – fuel gauge selector switches ПГ-7 of СЭТС-60М set; 21 – fuel content gauge indicator of СЭТС-60М set; 22 – air thermometer indicator ТНГ-13 of left-hand wing de-icer; 23 – cabin pressurization air thermometer indicator ТУЭ-48.

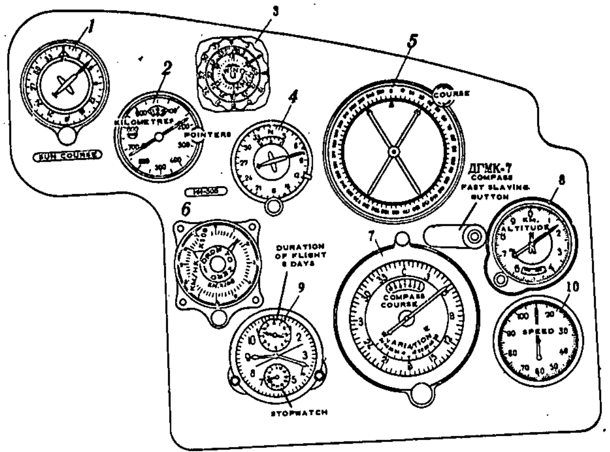

Fig. 3. Navigator's Instrument Board

1 – course indicator of ДАК-ДБ-5 set; 2 – D.R. computer of НИ-50Б set; 3 – wind setter of НИ-50Б set; 4 – automatic course device of НИ-50Б set; 5 – radio compass indicator УШДБ-1; 6 – track corrector of ДАГ-ДБ-5 set; 7 – indicator УШ of ДГМК-7 compass; 8 – altimeter ВД-20; 9 – clock АЧХО; 10 – airspeed indicator КУС-1200.

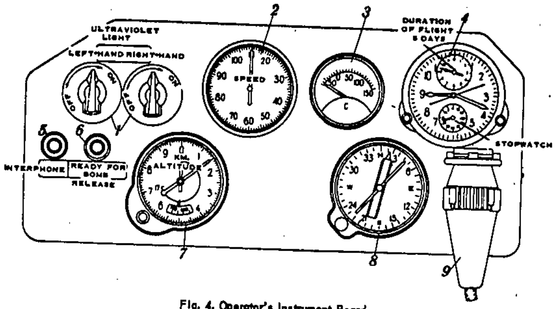

Fig. 4. Operator's Instrument Board

1 – rheostats of РУФО-45 ultraviolet lights; 2 – airspeed indicator КУС-1200; 3 – indicator ТУЭ-48 of external air thermometer; 4 – clock АЧХО; 5 – interphone button; 6 – warning lamp "Ready for bomb release"; 7 – altimeter ВД-20; 8 – course indicator of ДГМК-7 set; 9 – release button КСБ-49.

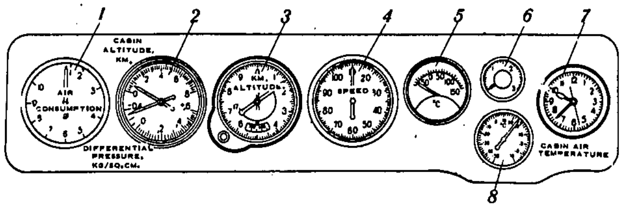

Fig. 5. Radio-Operator's Instrument Board

1 – air flowmeter РВУ-46; 2 – cabin altimeter УВПД-15; 3 – altimeter ВД-20; 4 – airspeed indicator КУС-1200; 5 – thermometer indicator ТУЭ-48 of external air temperature; 6 – voltmeter В-1; 7 – clock АВР-М; 8 – cabin air thermometer ТВ-45.

[redacted]

50X1-HUM

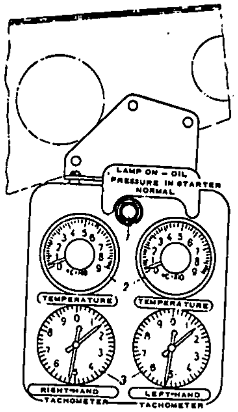

Fig. 6. Starter Instrument Board

1 – СЛЦ-51 indicating lamp "Oil pressure normal"; 2 – ТСТ-29 tachometer indicator; 3 – ТЭ-45 tachometer indicator.

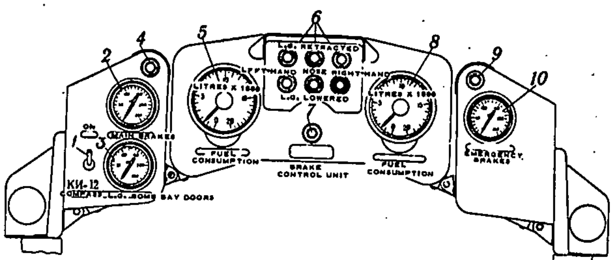

Fig. 7. Pilots' Control Board

1 – switch В-45 of КИ-12 compass; 2 – pressure gauge МГ-250Ш of main brakes; 3 – pressure gauge МГ-250Ш of landing gear – bomb hatch; 4 – warning lamp of pressure drop in main brake system; 5 – fuel flowmeter indicator РТС-16 of the left-hand group of fuel tanks; 6 – warning lamps "L.G. retracted" and "L.G. extended"; 7 – brake control unit warning lamp; 8 – fuel flowmeter indicator РТС-16 of the right-hand group of fuel tanks; 9 – warning lamp of pressure drop in emergency brake system; 10 – pressure gauge МГ-250Ш of emergency brakes.

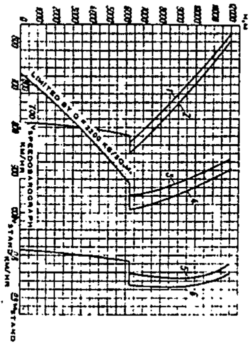

Fig. 8. Graph of Maximum and Horizontal Speeds Versus Altitudes

1 – maximum speeds by speedobarograph at normal engine rating; 2 – maximum speeds by speedobarograph at maximum engine rating; 3 – maximum speeds under standard conditions at normal engine rating; 4 – maximum speeds under standard conditions at maximum engine rating; 5 – Mach-number at normal engine rating; 6 – Mach-number at maximum engine rating.

[redacted]

50X1-HUM

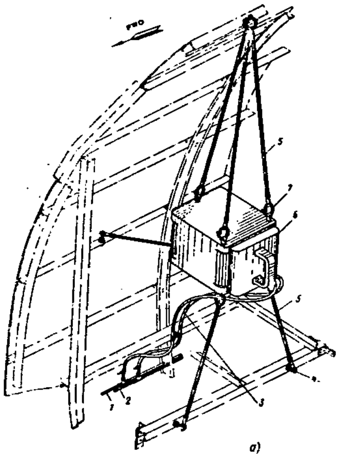

Fig. 11. Suspension of Recorder K2-75

1 – dynamic pressure line; 2 – static pressure line; 3 – durite hose; 4 – suspension hook; 5 – shock-absorbing cord; 6 – recorder; 7 – removable ring;

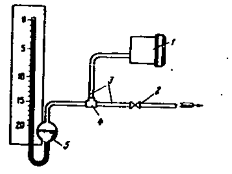

Fig. 12. Altimeter Checking Diagram

1 – altimeter to be checked; 2 – shut-off valve; 3 – pipeline; 4 – T-piece; 5 – barometer.

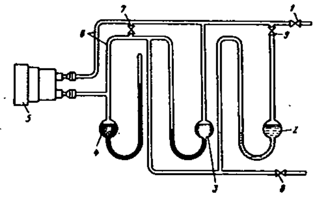

Fig. 13. Airspeed Indicator Checking Diagram

1, 7, 8 and 9 – shut-off cocks; 2 – water pressure gauge; 3 – mercury pressure gauge; 4 – mercury barometer; 5 – instrument to be checked; 6 – pipelines.

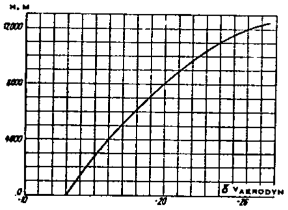

Fig. 14. Aerodynamic Correction Chart

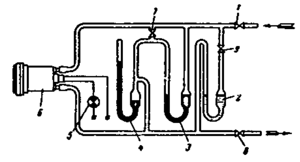

Fig. 15. Machmeter Checking Diagram

1, 7, 8 and 9 – shut-off cocks; 2 – water pressure gauge; 3 – mercury pressure gauge; 4 – mercury barometer; 5 – warning lamp; 6 – instrument to be checked.

[redacted]

50X1-HUM

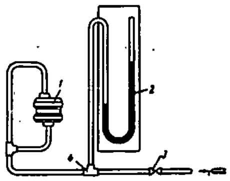

Fig. 16. Checking Diagram of CCH-3 Velocity Head Warning Unit of Static Pressure Line

1 – instrument to be checked; 2 – pressure gauge; 3 – shut-off valve; 4 – T-piece.

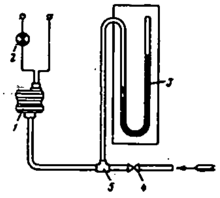

Fig. 17. Checking Diagram of CCH-3 Velocity Head Warning Unit of Pitot Pressure Line

1 – instrument to be checked; 2 – warning lamp; 3 – pressure gauge; 4 – shut-off valve; 5 – T-piece.

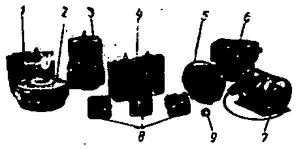

Fig. 18. Set of ДГМК-7 Compass

1 – junction box; 2 – transmitter; 3 – gyrounit; 4 – amplifier; 5 – main indicator; 6 – inverter; 7 – correction cut-out; 8 – auxiliary indicators; 9 – quick-slaving button.

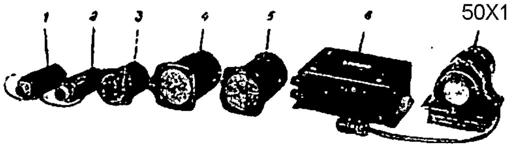

Fig. 19. Set of НИ-50Б Air Position Indicator

1 – line filter СФ-4; 2 – line filter СФ-2; 3 – wind setter; 4 – automatic course device; 5 – D.R. computer; 6 – distribution box; 7 – T.A.S. transmitter.

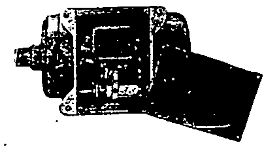

Fig. 20. Position of Adjustable Resistor Slide when Adjusting Inverter for Operation with Two Instruments

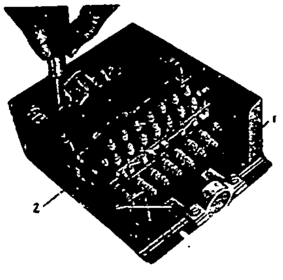

Fig. 21. Adjustment of Zero Signal

1 – distribution box; 2 – adjusting resistor.

[redacted]

50X1-HUM

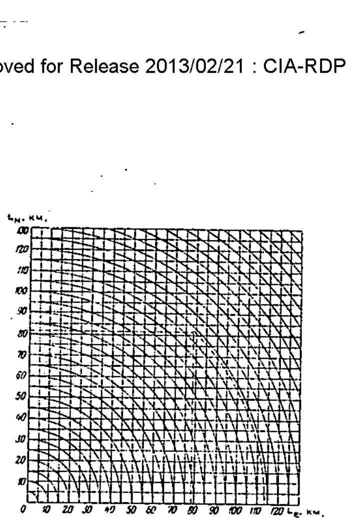

Fig. 22. Graph Used for Determining Covered Distance by Readings of D.R. Computer Pointers

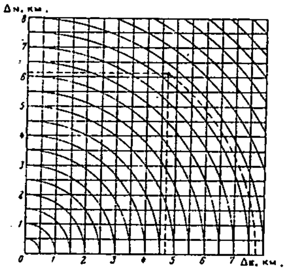

Fig. 23. Graph Used for Determining Absolute Error

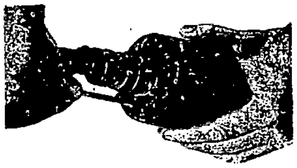

Fig. 24. Matching of Readings of Automatic Course Device with Those of Compass Main Indicator

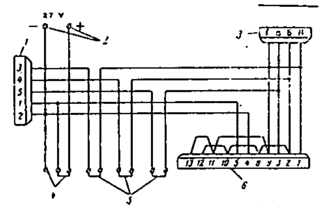

Fig. 25. Electric Panel Diagram for Checking АГБ-2 Gyro Horizon

1 – plug connector of ПАГ-1Ф inverter; 2 – supply terminals; 3 – plug connector of АГБ-2 gyro horizon; 4 – terminals for measuring currents and voltages in D.C. circuit; 5 – terminals for measuring currents and voltages in A.C. circuit; 6 – plug connector of correction cutout.

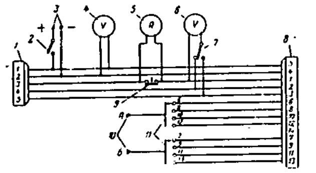

Fig. 26. Electric Panel Diagram for Checking Correction Cutout

1 – plug connectors of ПАГ-1Ф inverter; 2 – switch B-45; 3 – terminals; 4 – D.C. voltmeter, up to 30 – 40 V; 5 – A.C. ammeter, up to 1 A; 6 – A.C. voltmeter, up to 40 – 50 V; 7 – selector switch ПП-45; 8 – plug connectors ШР of correction cutout; 9 – button (normally closed); 10 – terminals for ohmmeter; 11 – selector.switches.

[redacted]

50X1-HUM

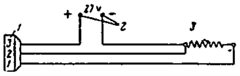

Fig. 27. Diagram for Checking ТУЭ-48 Resistor Thermometer Indicators

1 – plug connector of ТУЭ-48 indicator; 2 – supply terminals; 3 – resistance box

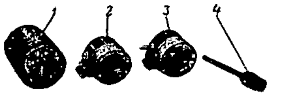

Fig. 28. Set of ЭМИ-3Р Gauge Unit

1 – indicator; 2 – fuel pressure pick-up unit П-100; 3 – oil pressure pick-up unit П-10; 4 – temperature pick-up unit.

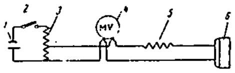

Fig. 29. Diagram for Checking Indicators of ТВГ-11 Thermometers

1 – source of electromotive force, 1 – 1.5 V; 2 – switch B-45; 3 – potentiometer; 4 – reference millivoltmeter; 5 – resistance box; 6 – indicator plug connector.

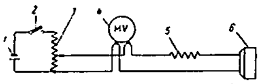

Fig. 30. Diagram for Checking Indicators of ТСТ-29 and ТПТ-13 Thermometers

1 – source of electromotive force, 1 – 1.5 V; 2 – switch B-45; 3 – potentiometer; 4 – reference illivoltmeter; 5 – series resistor; 6 – indicator plug connector.

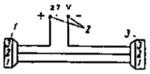

Fig. 31. Diagram of Wire Bundle for Checking Oil Pressure Gauge of ЭМИ-3Р Set

1 – plug connectors of oil pressure indicator;
2 – power supply terminals;
3 – pressure pick-up unit П-10.
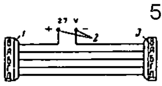
Fig. 32. Diagram of Wire Bundle for Checking Fuel Pressure Gauge of ЭМИ-3Р Set

1 – plug connectors of fuel pressure indicator; 2 – power supply terminals;
3 – pressure pick-up unit П-100.

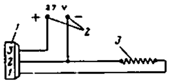

Fig. 33. Electric Diagram for Checking Temperature Indicator of ЭМИ-3Р Set

1 – plug connectors of oil temperature indicator; 2 – power supply terminals; 3 – resistance box.

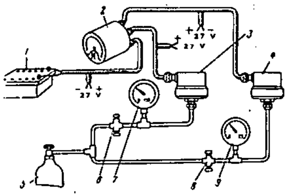

Fig. 34. Diagram for Checking ЭМИ-3Р Set

1 – plug resistance box; 2 – indicator; 3 – pressure pick-up П-100; 4 – pressure pick-up unit П-10; 5 – bottle with pressed gas; 6 – cock for feeding pressure into oil pressure ge system; 7 – reference pressure gauge, up to 150 kg. sq.cm.; cock for feeding pressure into oil pressure gauge system; 9 – reference pressure gauge, up to 10 kg/sq.cm.

[redacted]

50X1-HUM

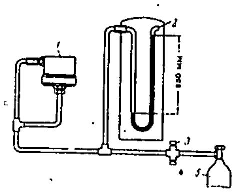

Fig. 35. Diagram for Checking Airtightness of Pressure Pick-Up Unit Casing

1 – pressure pick-up unit; 2 – mercury pressure gauge; 3 – pressure feed cock; 4 – pressure release cock; 5 – bottle with compressed air.

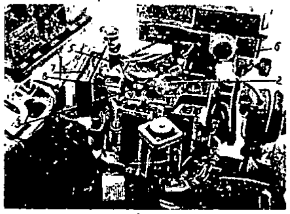

Fig. 36. Installation of АП-5-2М Autopilot Directional Stabilizer

1 – locking mechanism; 2 – turn control knob; 3 – autopilot clutch engaging knob; 4 – bracket with shock absorber; 5 – bombsight clutch; 6 – bombsight ОПБ-11Р ; 7 – directional panel; 8 – drift gear clutch disengaging knob.

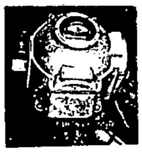

Fig. 37. Vertical Flight Gyro of АП-5-2М Autopilot

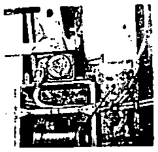

Fig. 38. Attachment Wing of Angular Rate Control Unit of АП-5-2М Autopilot

1 – angular rate control gyro; 2 – ПАГ-1Ф Inverter.

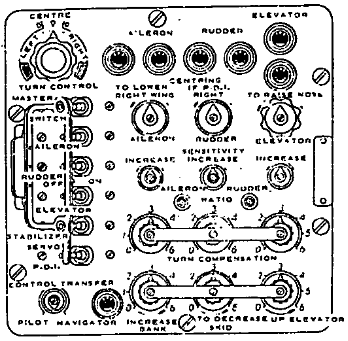

Fig. 39. Autopilot Control Panel

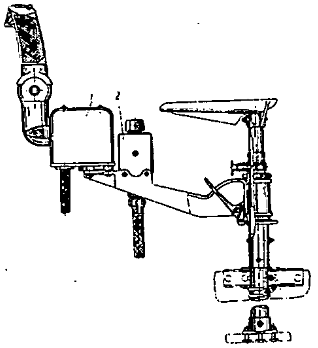

Fig. 40. Swivelling Bracket for Autopilot Booster Control Knob and Selector Switch

1 – booster control knob; 2 – selector switch.

50X1-HUM

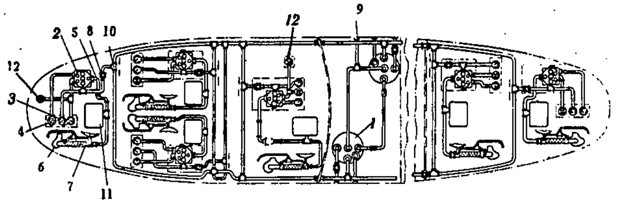

Fig. 41. Key Diagram of Oxygen Equipment

1 – liquid oxygen converter, type КПЖ-30; 2 – stationary oxygen economizer, type КП-24М; 3 – oxygen indicator, type ПК-24; 4 – excessive pressure gauge, type М-1000; 5 – oxygen hose, type КШ-24; 6 – mask, type КМ-24, with mask-to-face tightness compensator and lock; 7 – pressure-breathing waistcoat; 8 – oxygen valve, type КВ-5; 9 – aircraft charging pipe union; 10 – tee-piece with non-return valve; 11 – parachute oxygen breathing apparatus, type КП-23; 12 – flow indicator.

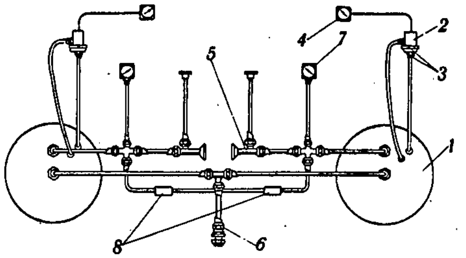

Fig. 42. Arrangement Diagram of the Liquid Oxygen Installation

1 – oxygen converter, type КПЖ-30; 2 – oxygen level indicator transmitter, type ДУЖК-Д; 3 – dampers; 4 – oxygen level indicator, type ДУЖК-У; 5 – pressure release valve; 6 – aircraft charging pipe union; 7 – pressure gauge; 8 – shut-off valves.

[redacted]

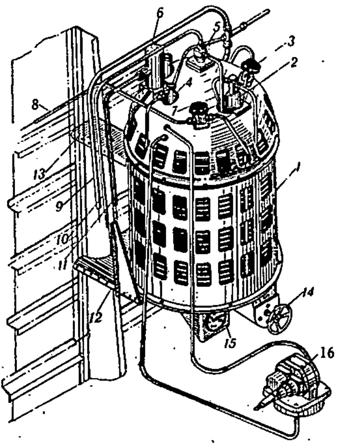

Fig. 43. КПЖ-30 Converter and Oxygen Level Indicator Installation at Frame No. 22

1 – oxygen converter, type КПЖ-30; 2 – automatic pressure increase valve; 3 – valve, type КВ-5, ahead of pressure increase automatic units; 4 – by-pass valve; 5 – non-return valve; 6 – safety valve; 7 – valve, type КВ-5, after evaporator; 8 – pipe; 9 – pressure release pipe; 10 – pipe for filling vessel with liquid; 11 – pipe from safety valve; 12, 13 – brackets securing converter to frame No. 22; 14 – pressure release valve; 15 – pressure gauge; 16 – liquid oxygen level indicator transmitter, type ДУЖК-Д.

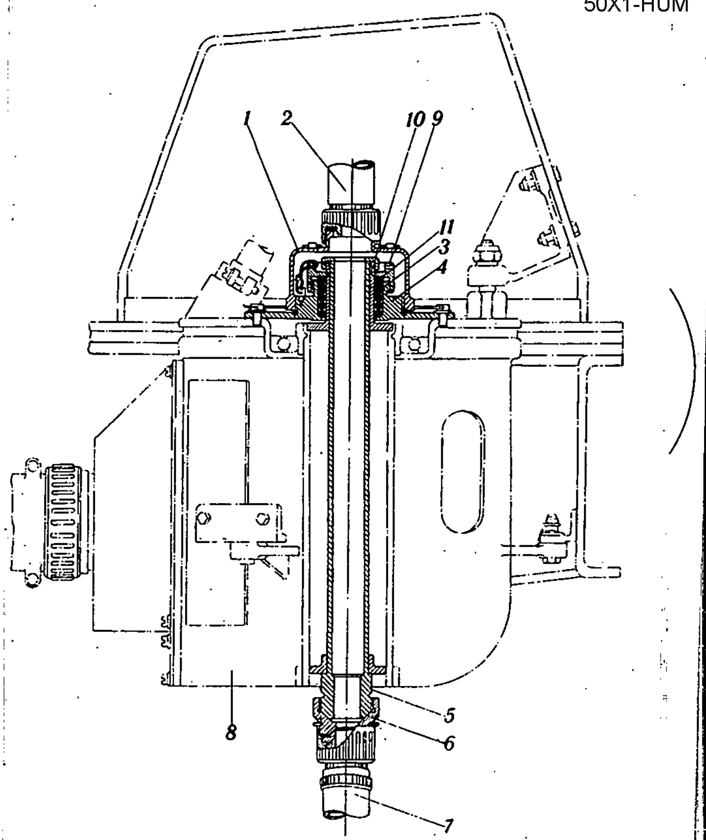

Fig. 44. Oxygen Adapter

ever; 2 – hose, type КШ-10; 3 – packing rings; 4 – holder; 5 – pipe; 6 – adapter; 7 – hose, type КШ-24; 8 – current-collecting device; 9 – nut; 10 – limiter; 11 – ring.

[redacted]

50X1-HUM

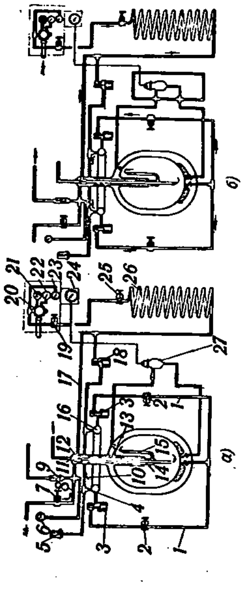

Fig. 45. Schematic Diagram of КПЖ-30 Oxygen Converter

а – charging diagram; б – operation diagram

1 – pipe; 2 – valve, type КВ-5; 3 – automatic pressure increase valve; 4 – tee-piece; 5 – safety valve; 6 – pressure gauge; 7 – pressure release valve; 8 – pipe; 9 – shut-off valve; 10 – pipe; 11 – pipe; 12 – non-return valve; 13 – vessel; 14 – control pipe; 15 – V-shaped pipe; 16 – receiver; 17 – pipe; 18 – automatic by-pass valve; 19 – КВ-5 valve at oxygen station; 20 – КП-24Ш economizer; 21 – oxygen indicator, type ИК-24; 22 – excessive pressure gauge; 23 – pressure gauge; 24 – liquid oxygen level indicator; 25 – КВ-5 valve after the evaporator; 26 – evaporator; 27 – liquid oxygen indicator transmitter, type ДУЖК-Д

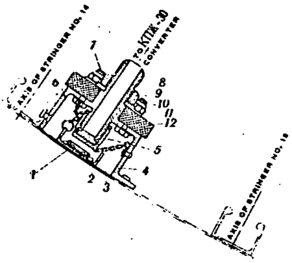

Fig. 46. Aircraft Charging Pipe Union

1 – hatch cover; 2 – packing gasket; 3 ÷ 6 – chains; 4 – aircraft charging pipe union attachment bracket; 5 – plug; 7 – bolt; 8 – aircraft charging pipe union; 9, 11 – nuts; 10 – washer; 12 – plate.

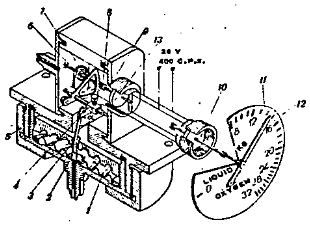

Fig. 47. Kinematic Diagram of ДУЖК Liquid Oxygen Indicator

1 – diaphragm; 2 – moving centre; 3 – rod; 4 – fork; 5 – sector axle; 6 – hairspring; 7 – sector; 8 – pipe; 9 – rotor axle; 10 – meter rotor; 11 – pointer; 12 – dial; 13 – transmitter rotor.

[redacted]

50X1-HUM

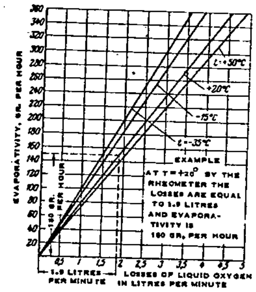

Fig. 48. Graph for Determining Losses Caused by Evaporativity by Measured Volumetric Amount of Oxygen in lit. per min. versus Ambient Air Temperature

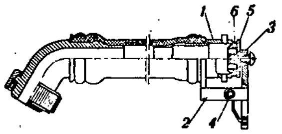

Fig. 49. Oxygen Hose, Type KШ-24

1 – pipe union; 2 – bracket; 3 – strip; 4 – axle; 5 – valve; 6 – rubber gasket.

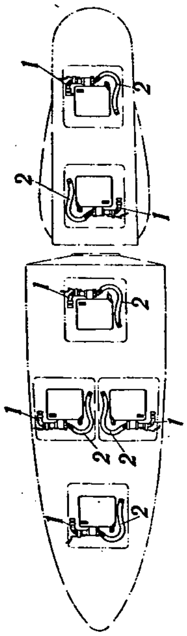

Fig. 50. Diagram of Arrangement of KП-23 Oxygen Breathing Apparatus on Aircraft Seats

1 – apparatus short hose for connection with aircraft oxygen hose; 2 – apparatus long hose for connection with mask.

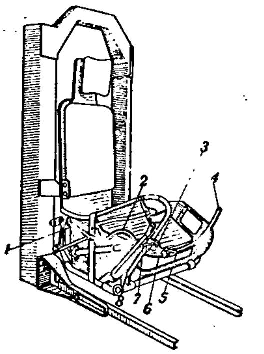

Fig. 51. Placing Oxygen Hoses on Navigator's Seat

1 – aircraft oxygen hose; 2 – short hose of КП-23 oxygen breathing apparatus; 3 – clamp; 4 – long hose of КП-23 oxygen breathing apparatus (to the mask); 5 – parachute; 6 – locking pin snap hook; 7 – cord; 8 – seat right-hand arm rest.

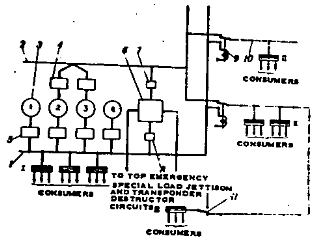

Fig. 52. Key Distribution Diagram of D.C. Supply System

1 – normal supply circuit; 2 – emergency supply circuit; 3 – generators, type ГСР-18000; 4 – emergency differential undercurrent relay, type ДМР-600; 5 – normal differential undercurrent relay, type ДМР-600; 6 – storage battery, type 12САМ-55; 7 – contactor, type К-300Д, for connecting storage battery to emergency supply circuit; 8 – contactor, type К-300Д, for connecting storage battery to normal supply circuit; 9 – selecting contactor, type КП; 10 – dual supply circuit; 11 – change-over switch, type ПП-45; I – normal supply distribution busbars; II – dual supply distribution busbars; III – triple supply distribution busbar

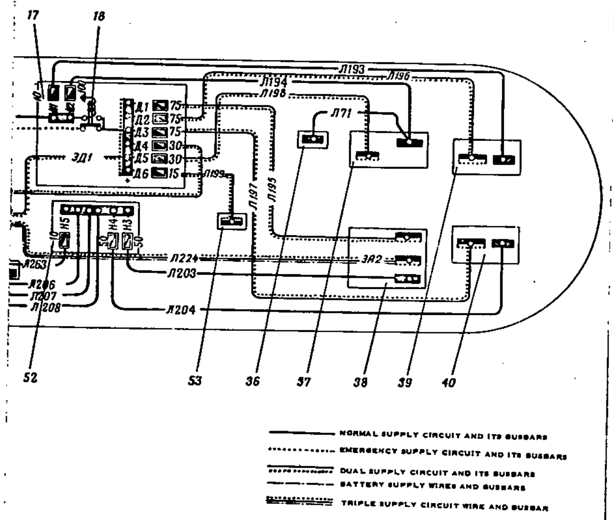

supply
g ground
jecting
ly, type
storage
stem
cuit-
l panel;
|– right-

hand circuit breaker control panel of navigator; 41 – ДСП-53 box; 42 – rounds counter; 43 – blister station control panel; 44 – lower gun mount supply box; 45 – power junction box; 46 – circuit breaker box of autopilot heater system; 47 – distribution panel, right; 48 – storage battery junction box; 49 – power lead-in of emergency supply circuit; 50 – generator control panel; 51 – fuelling control board; 52 – glass panel heater system junction box; 53 – fuel supply control board.

[redacted]

50X1-HUM

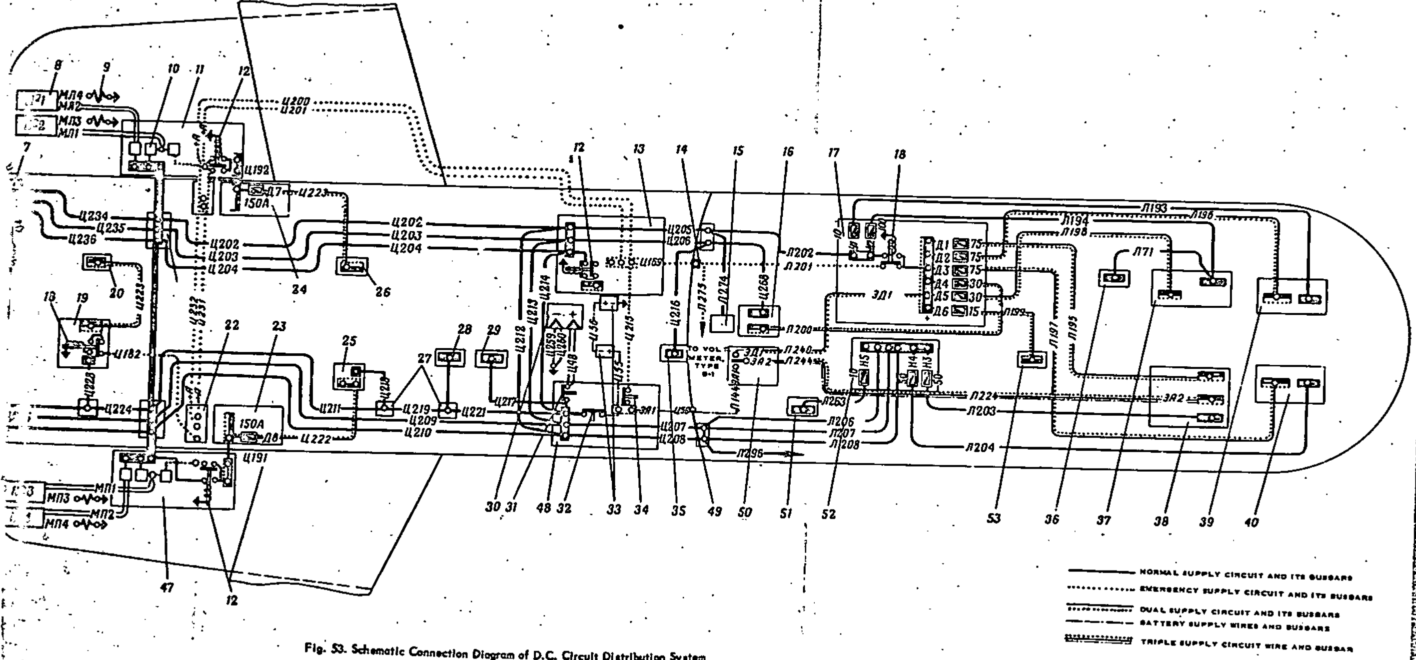

Fig. 53. Schematic Connection Diagram of D.C. Circuit Distribution System

power junction box;
bin; 4 – power lead-in
box of tail gun mount;
– power junction box;
resistor, type
relay, type ДМР-600;
contactor, type
at frame No. 17;
circuit; 15 – top station
control panel; 16 – circuit breaker control panel at radar operator's station; 17 – dual supply circuit junction box at frame No. 6; 18 – selecting contactor, type КП-200Д. 19 – fuel pump junction box, rear; 20 – colour flare bomb emergency dropping circuit junction box; 21 – power junction box of normal supply circuit; 22 – power junction box of emergency supply circuit; 23 – dual supply circuit junction box, right; 24 – dual supply circuit junction box, left; 25 – fuel pump system junction box, right; 26 – fuel pump system junction box, left; 27 – power junction box; 28 – top gun mount supply box; 29 – camera equipment junction box; 30 – ground supply plug connector; 31 – contactor, type К-400Д, for connecting ground power supply source; 32 – contactor, type К-300Д for connecting storage battery to normal supply circuit; 33 – storage battery, type 12-САМ-55; 34 – contactor, type К-300Д, for connecting storage battery to emergency supply circuit; 35 – hydraulic pump system junction box; 36 – pilot's instrument panel; 37 – pilot's circuit-breaker control panel; 38 – co-pilot's circuit breaker control panel; 39 – left-hand circuit breaker control panel of navigator; 40 – right-hand circuit breaker control panel of navigator; 41 – ДСП-53 box; 42 – rounds counter; 43 – blister station control panel; 44 – lower gun mount supply box; 45 – power junction box; 46 – circuit breaker box of autopilot heater system; 47 – distribution panel, right; 48 – storage battery junction box; 49 – power lead-in of emergency supply circuit; 50 – generator control panel; 51 – fuelling control board; 52 – glass panel heater system junction box; 53 – fuel supply control board.

[redacted]

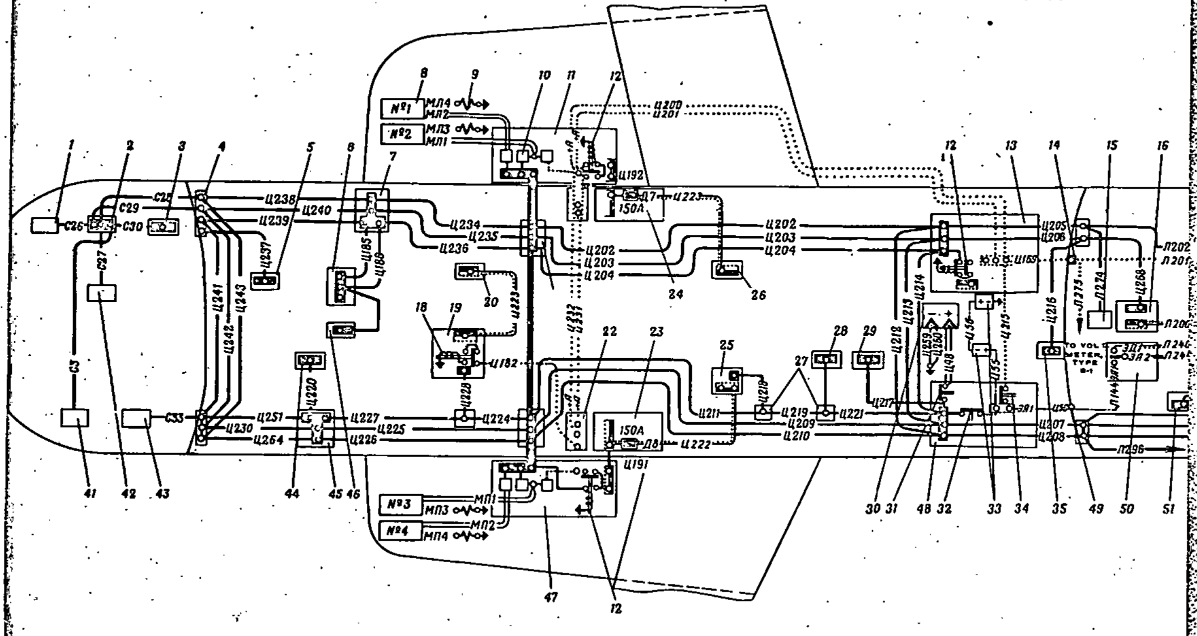

Fig. 53. Schematic Connection Diagram of D.C. Circuit Distribution System

1 – tail station control panel; 2 – rear cabin power junction box; 3 – circuit breaker control panel of rear cabin; 4 – power lead-in of normal supply circuit; 5 – supply junction box of tail gun mount; 6 – de-icer junction box of tail unit; 7 – power junction box; 8 – generator, type ГСР-18000; 9 – ballast resistor, type ВС-18000; 10 – differential undercurrent relay, type ДМР-600; 11 – distribution panel, left; 12 – selecting contactor, type КП-400Д; 13 – dual supply junction box at frame No. 17; 14 – power lead-in of emergency supply circuit; 15 – top station control panel; 16 – circuit breaker control panel at radar operator's station; 17 – dual supply circuit junction box at frame No. 6; 18 – selecting contactor, type КП-200Д. 19 – fuel pump junction box, rear; 20 – colour flare bomb emergency dropping circuit junction box; 21 – power junction box of normal supply circuit; 22 – power junction box of emergency supply circuit; 23 – dual supply circuit junction box, right; 24 – dual supply circuit junction box, left; 25 – fuel pump system junction box, right; 26 – fuel pump system junction box, left; 27 – power junction box; 28 – top gun mount supply box; 29 – camera equipment junction box; 30 – ground plug connector; 31 – contactor, type К-400Д, for connectin power supply source; 32 – contactor, type К-300Д for con storage battery to normal supply circuit; 33 – storage batte 12-САМ-55; 34 – contactor, type К-300Д, for connecting battery to emergency supply circuit; 35 – hydraulic pump junction box; 36 – pilot's instrument panel; 37 – pilot's cir breaker control panel; 38 – co-pilot's circuit breaker contro 39 – left-hand circuit breaker control panel of navigator; 40

[redacted]

50X1-HUM

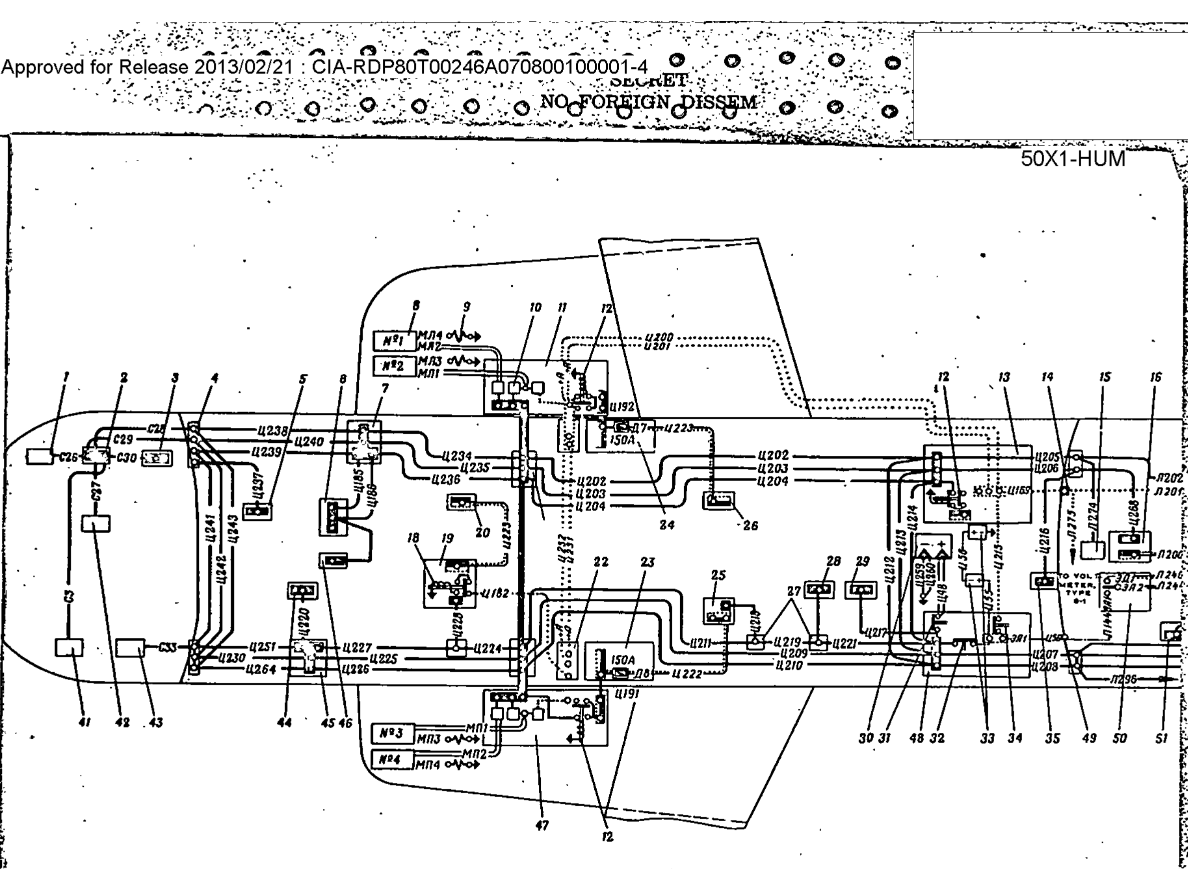

Fig. 53. Schematic Connection Diagram of D.C. Circuit Distribution System

1 – tail station control panel; 2 – rear cabin power junction box; 3 – circuit breaker control panel of rear cabin; 4 – power lead-in of normal supply circuit; 5 – supply junction box of tail gun mount; 6 – de-icer junction box of tail unit; 7 – power junction box; 8 – generator, type ГСР-18000; 9 – ballast resistor, type ВС-18000; 10 – differential undercurrent relay, type ДМР-600; 11 – distribution panel, left; 12 – selecting contactor, type КП-400Д; 13 – dual supply junction box at frame No. 17; 14 – power lead-in of emergency supply circuit; 15 – top station control panel; 16 – circuit breaker control panel at radar operator's station; 17 – dual supply circuit junction box at frame No. 6; 18 – selecting contactor, type КП-200Д. 19 – fuel pump junction box, rear; 20 – colour flare bomb emergency dropping circuit junction box; 21 – power junction box of normal supply circuit; 22 – power junction box of emergency supply circuit; 23 – dual supply circuit junction box, right; 24 – dual supply circuit junction box, left; 25 – fuel pump system junction box, right; 26 – fuel pump system junction box, left; 27 – power junction box; 28 – top gun mount supply box; 29 – camera equipment junction box; 30 – ground

plug connector; 31 – contactor, type К-400Д, for connectin

power supply source; 32 – contactor, type К-300Д for con

storage battery to normal supply circuit; 33 – storage batte

12-САМ-55; 34 – contactor, type К-300Д, for connecting

battery to emergency supply circuit; 35 – hydraulic pump s

junction box; 36 – pilot's instrument panel; 37 – pilot's ci

breaker control panel; 38 – co-pilot's circuit breaker contro

39 – left-hand circuit breaker control panel of navigator; 40-

]

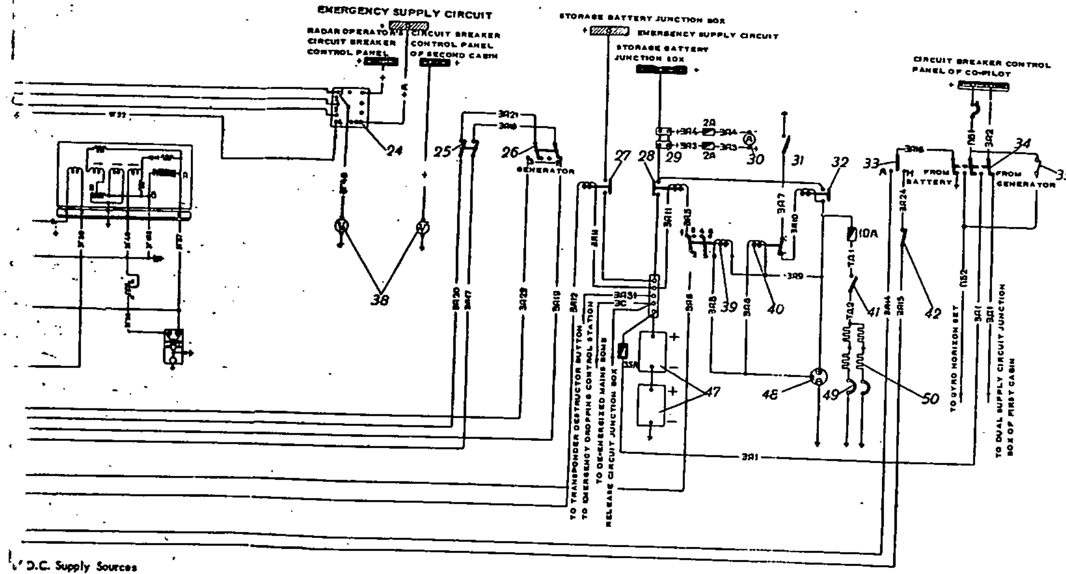

D.C. Supply Sources

1 – ballast resistor, type БС-18000; 2 – generator, type ГСР-18000, No. 1; 3 – capacitor, type КВМ-31; 4 – shunt of ammeter, type A-3; 5 – differential undercurrent relay, type ДМР-600 for connecting generator No. 1 to normal supply circuit; 6 – contactor; 7 – auxiliary relay, type РЛ-5В; 8 – limiting resistor; 9 – command relay; 10 – polarized relay, type РПР-2А; 11 – switch, type 2В-45 of generator No. 1; 12 – carbon regulator, type РУГ-82; 13 – parallel operation winding; 14 – automatic correction winding; 15 – temperature compensation winding; 16 – working winding; 17 – stabilizing resistor; 18 – adjusting resistor; 19 – temperature compensation resistor; 20 – carbon pile; 21 – relay, type ДМР-600, for connecting generator No. 2 to emergency supply circuit; 22 – relay, type ДМР-600, for connecting generator No. 2 to normal supply circuit; 23 – switch, type 2В-45, of generator No. 2; 24 – change-over switch, type П-46, of voltmeter; 25 – switch, type 2В-45, labelled EMERGENCY SUPPLY CIRCUIT (АВАРИЙНАЯ СЕТЬ); 26 – change-over switch, type 2ПН-45, labelled FROM GENERATOR (ОТ ГЕНЕРАТОРА); 27 – contactor, type К-300Д, for connecting storage battery to emergency supply circuit; 28 – contactor, type К-300Д, for connecting storage battery to normal supply circuit; 29 – shunt of ammeter, type A-1; 30 – ammeter, type A-1; 31 – ground supply switch, type В-45; 32 – contactor, type К-400Д, for connecting ground supply source to normal supply circuit; 33 – storage battery change-over switch, type ППН-45; 34 – change-over switches, types ПП-45 and 2ПП-45, of triple supply busbar; 35 – switches, type В-45, of stand-by gyro horizon set; 36 – ammeter, type A-3; 37 – external resistor, type ВС-20; 38 – voltmeter, type В-1; 39 – blocking relay, type РП-2; 40 – polarized relay, type РПП-А; 41 – switch, type В-45, of storage battery container heater circuit; 42 – switch, type В-45, for storage battery-to-normal supply circuit blocking; 43 – stability transformer, type ТС-8; 44 – generator No. 2; 45 – generator No. 3; 46 – generator No. 4; 47 – storage battery, type 12-САМ-55; 48 – ground supply plug connector; 49 – thermal switch, type 777В, of storage battery container heater circuit; 50 – heater element of storage battery container; 51 – schematic connection diagram of generator, type ГСР-18000; 52 – main pole; 53 – commutating pole; 54 – blocking relay, type РП-6, of generator No. 2; 55 – blocking relay, type РП-6, of generator No. 1.

[redacted]

50X1-HUM

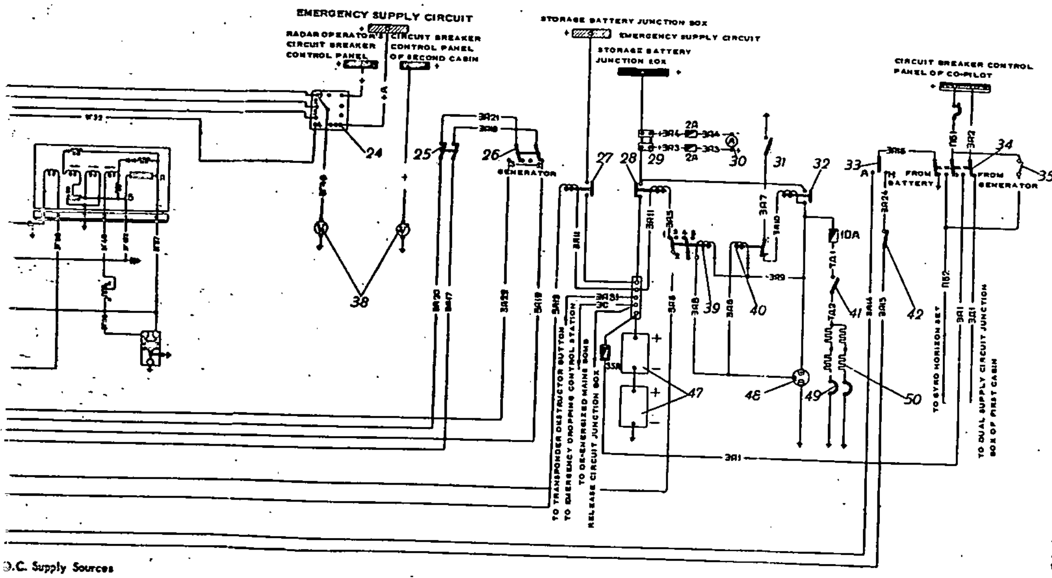

D.C. Supply Sources

1 – ballast resistor, type БС-18000; 2 – generator, type ГСР-18000, No. 1; 3 – capacitor, type КБМ-31; 4 – shunt of ammeter, type A-3; 5 – differential undercurrent relay, type ДМР-600 for connecting generator No. 1 to normal supply circuit; 6 – contactor; 7 – auxiliary relay, type РЛ-5В; 8 – limiting resistor; 9 – command relay; 10 – polarized relay, type РПР-2А; 11 – switch, type 2В-45 of generator No. 1; 12 – carbon regulator, type РУГ-82; 13 – parallel operation winding; 14 – automatic correction winding; 15 – temperature compensation winding; 16 – working winding; 17 – stabilizing resistor; 18 – adjusting resistor; 19 – temperature compensation resistor; 20 – carbon pile; 21 – relay, type ДМР-600, for connecting generator No. 2 to emergency supply circuit; 22 – relay, type ДМР-600, for connecting generator No. 2 to normal supply circuit; 23 – switch, type 2В-45, of generator No. 2 ; 24 – change-over switch, type П-46 of voltmeter; 25 – switch, type 2В-45, labelled EMERGENCY SUPPLY CIRCUIT (АВАРИЙНАЯ СЕТЬ); 26 – change-over switch, type 2ПН-45, labelled FROM GENERATOR (ОТ ГЕНЕРАТОРА) ; 27 – contactor, type К-300Д, for connecting storage battery to emergency supply circuit; 28 – contactor, type К-300Д, for connecting storage battery to normal supply circuit; 29 – shunt of ammeter, type A-1; 30 – ammeter, type A-1; 31 – ground supply switch, type В-45; 32 – contactor, type К-400Д, for connecting ground supply source to normal supply circuit; 33 – storage battery change-over switch, type ППН-45; 34 – change-over switches, types ПП-45 and 2ПП-45, of triple supply busbar; 35 – switches, type В-45, of stand-by gyro horizon set; 36 – ammeter, type A-3; 37 – external resistor, type ВС-20; 38 – voltmeter, type В-1; 39 – blocking relay, type РП-2 ; 40 – polarized relay, type РПП-А; 41 – switch, type В-45, of storage battery container heater circuit; 42 – switch, type В-45, for storage battery-to-normal supply circuit blocking; 43 – stability transformer, type ТС-8; 44 – generator No. 2; 45 – generator No. 3; 46 – generator No. 4; 47 – storage battery, type 12-САМ-55; 48 – ground supply plug connecter; 49 – thermal switch, type 7778, of storage battery container heater circuit; 50 – heater element of storage battery container; 51 – schematic connection diagram of generator, type ГСР-18000; 52 – main pole; 53 – commutating pole; 54 – blocking relay, type РП-6, of generator No. 2; 55 – blocking relay, type РП-6, of generator No. 3.

[redacted]

50X1-HUM

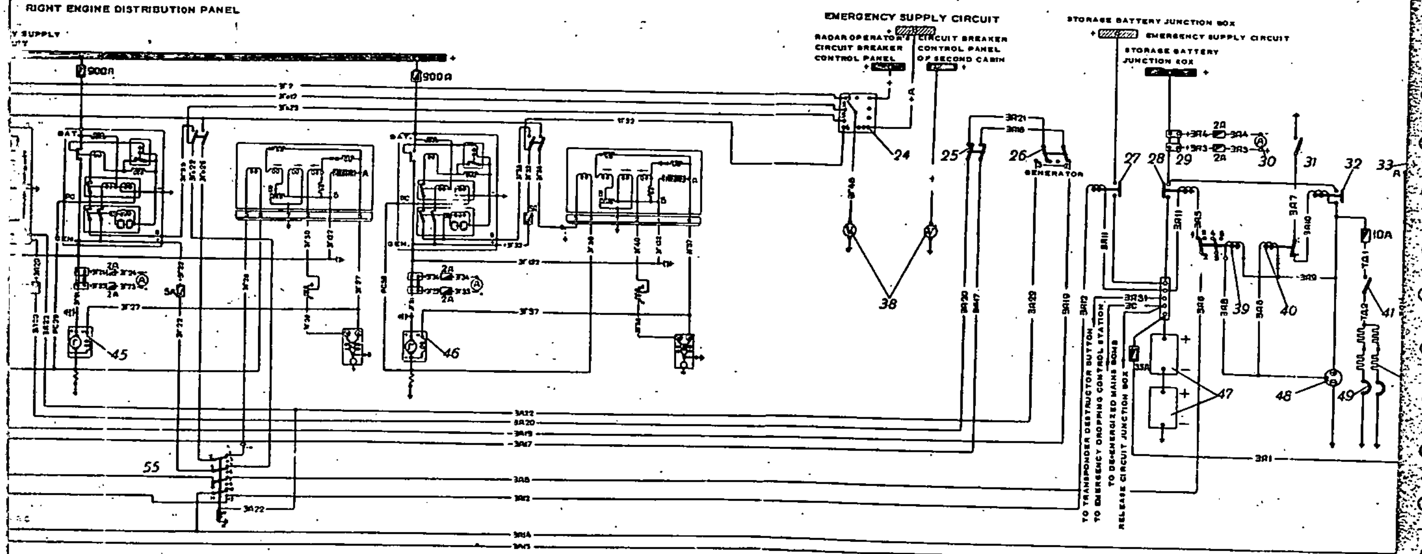

Fig. 54. Key Circuit Diagram of D.C. Supply Sources

[redacted]

50X1-HUM

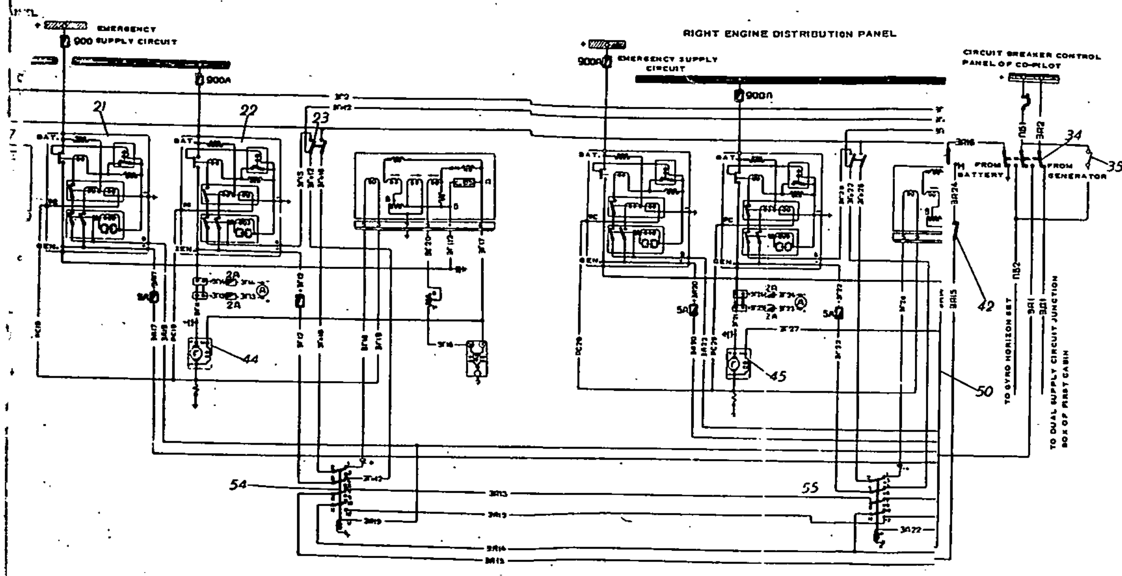

1 – ballast resistor, type БС-18000; 2 – generator, type ГСР-18000, No. 1; 3 – capacitor, type КБМ-31; 4 – shunt of ammeter, type A-3; 5 – differential undercurrent relay, type ДМР-600 for connecting generator No. 1 to normal supply circuit; 6 – contactor; 7 – auxiliary relay, type РЛ-5В; 8 – limiting resistor; 9 – command relay; 10 – polarized relay, type РПР-2А; 11 – switch, type 2В-45 of generator No. 1; 12 – carbon regulator, type РУГ-82; 13 – parallel operation winding; 14 – automatic correction winding; 15 – temperature compensation winding; 16 – working winding; 17 – stabilizing resistor; 18 – adjusting resistor; 19 – temperature compensation resistor; 20 – carbon pile; 21 – relay, type ДМР-600, for connecting generator No. 2 to emergency supply circuit; 22 – relay, type ДМР-600, for connecting generator No. 2 to normal supply circuit; 23 – switch, type 2В-45, of generator No. 2; 24 – change-over switch, type П-46, of voltmeter; 25 – switch, type 2В-45, labelled EMERGENCY SUPPLY CIRCUIT (АВАРИЙНАЯ СЕТЬ); 26 – change-over switch, type 2ПВ-45, labelled FROM GENERATOR (ОТ ГЕНЕРАТОРА); 27 – contactor, type К-300Д, for connecting storage battery to emergency supply circuit; 28 – contactor, type К-300Д, for connecting storage battery to normal supply circuit; 29 – shunt of ammeter, type A-1; 30 – ammeter, type A-1; 31 – ground supply switch, type В-45; 32 – contactor, type К-400Д, for connecting ground supply source to normal supply circuit; 33 – storage battery change-over switch, type ПНП-45; 34 – change-over switches, types ПП-45 and 2ПП-45, of triple supply busbar; 35 – switches, type В-45, of stand-by gyro horizon set; 36 – ammeter, type A-3; 37 – external resistor, type ВС-20; 38 – voltmeter, type В-1; 39 – blocking relay, type РП-2; 40 – polarized relay, type РПП-А; 41 – switch, type В-45, of storage battery container heater circuit; 42 – switch, type В-45, for storage battery-to-normal supply circuit blocking; 43 – stability transformer, type ТС-8; 44 – generator No. 2; 45 – generator No. 3; 46 – generator No. 4; 47 – storage battery, type 12-САМ-55; 48 – ground supply plug connector; 49 – thermal switch, type 777В, of storage battery container heater circuit; 50 – heater element of storage battery container; 51 – schematic connection diagram of generator, type ГСР-18000; 52 – main pole; 53 – commutating pole; 54 – blocking relay, type РП-6, of generator No. 2; 55 – blocking relay, type РП-6, of generator No. 3.

[redacted]

50X1-HUM

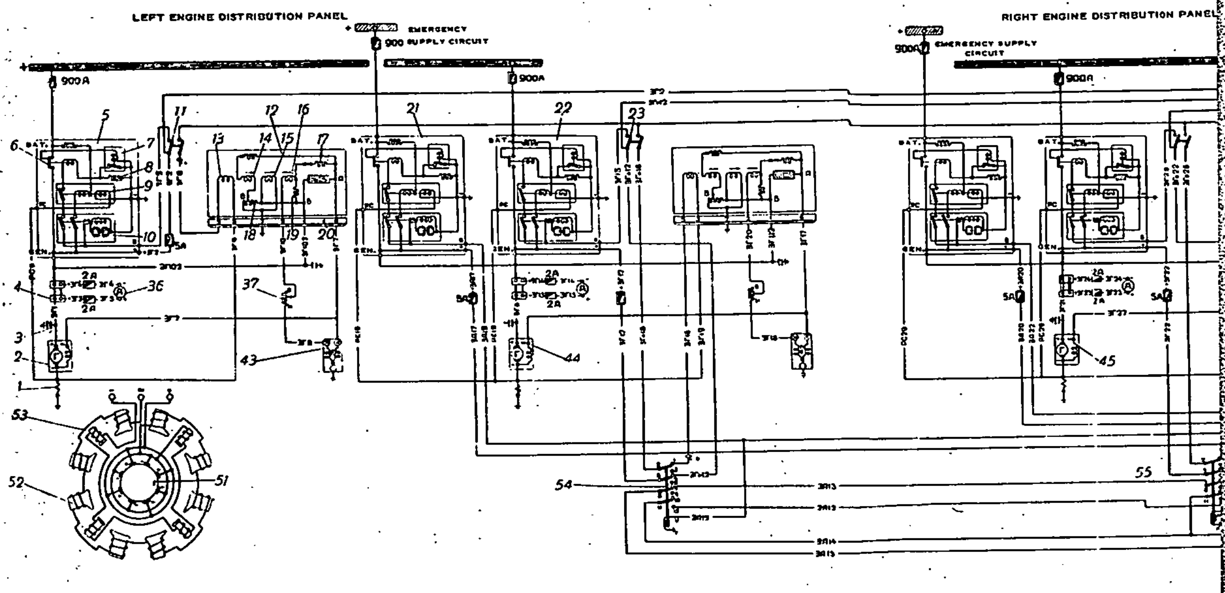

[redacted]

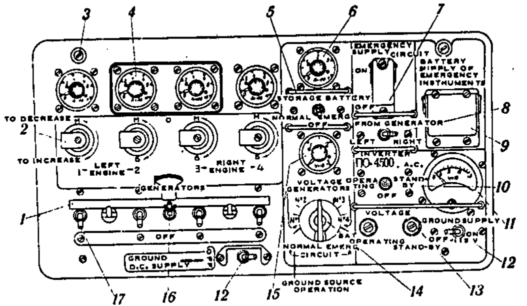

Fig. 55. Generator Control Panel

1 – master disconnecting bar of generator switches; 2 – external resistor, type ВС-20; 3 – panel attachment screw; 4 – ammeters, type A-3; 5 – safety bar; 6 – ammeter, type A-1; 7 – fuse of 2B-45 switch; 8 – change-over switch, type 2ПП-45; 9 – fuse of switches, type 2ПП-45 and ПП-45; 10 – change-over switch, type 3ППН-45; 11 – voltmeter, type ВФ-150; 12 – switch, type B-45; 13 – adjusting resistor РС-4М; 14 – voltmeter change-over switch, type П-46; 15 – voltmeter, type В-1; 16 – switch, type В-45, for storage battery blocking from normal supply circuit; 17 – generator switch type 2В-45.

[redacted]

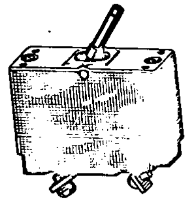

Fig. 56. Automatic Circuit Breaker, Type A3C

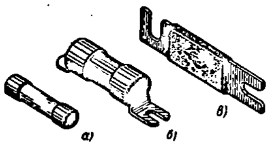

Fig. 57. Fuses
(a) glass fuse, type СП; (б) – delayed-action fuse, type ИП;
(в) – high heat fuse, type ТП.

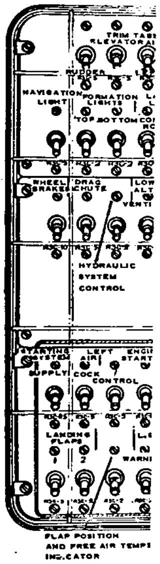

[redacted]

50X1-HUM

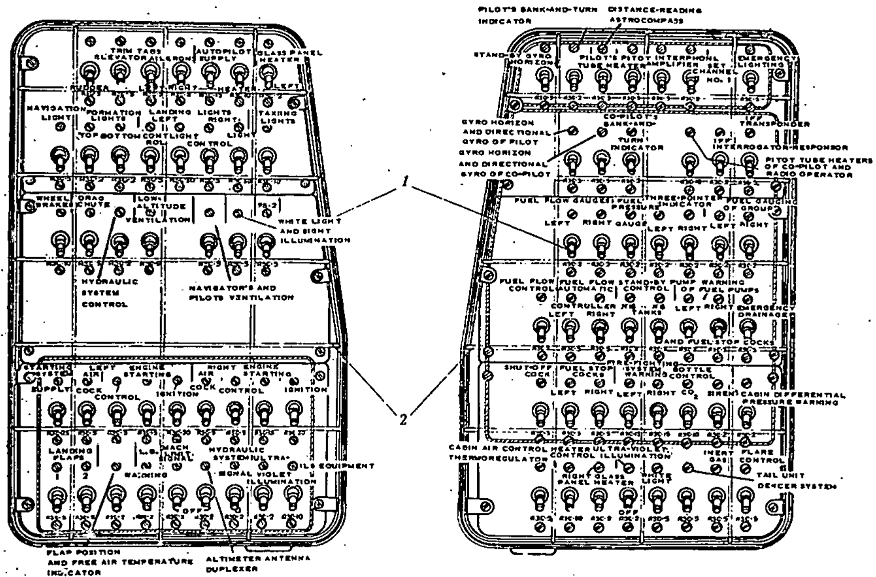

Fig. 58. Circuit Breaker Control Panels of Pilot and Co-Pilot

1 – automatic circuit breaker; 2 – safety screen.

[redacted]

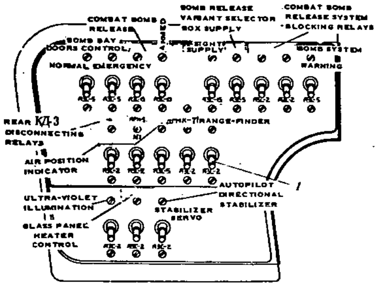

Fig. 59. Left-Hand Circuit Breaker Control Panel of Navigator

1 – circuit breaker, type A3C.

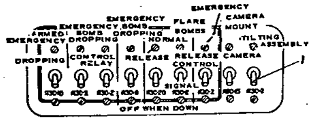

Fig. 60. Right-Hand Circuit Breaker Control Panel of Navigator

1 – circuit breaker, type A3C.

[redacted]

50X1-HUM

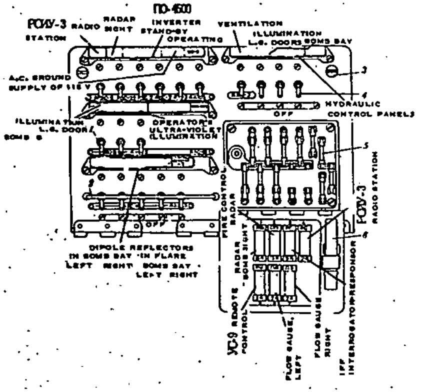

Fig. 61. Electric Control Board of Radar Operator

1 – circuit breaker, type A3C; 2 – safety bar; 3 – electric control board attachment screw; 4 – switch, type B-45; 5 – fuse, type СП; 6 – СП fuse remover.

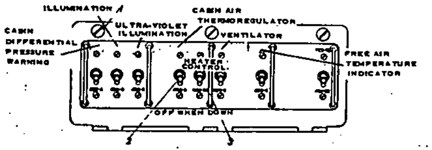

Fig. 62. Circuit Breaker Control Panel of Rear Cabin

1 – spring lock; 2 – circuit breaker, type A3C; 3 – safety bar.

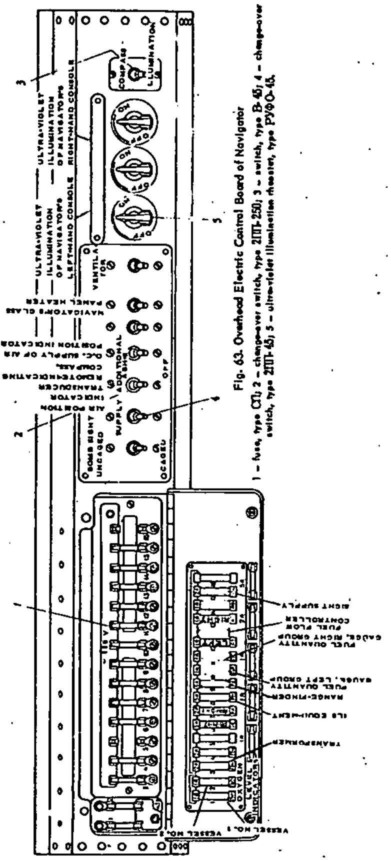

Fig. 63. Overhead Electric Control Board of Navigator

1 – fuse, type СП; 2 – change-over switch, type 2ПП-250; 3 – switch, type B-45; 4 – change-over switch, type 2ПП-45; 5 – ultra-violet illumination rheostat, type РУФО-45.

[redacted]

50X1-HUM

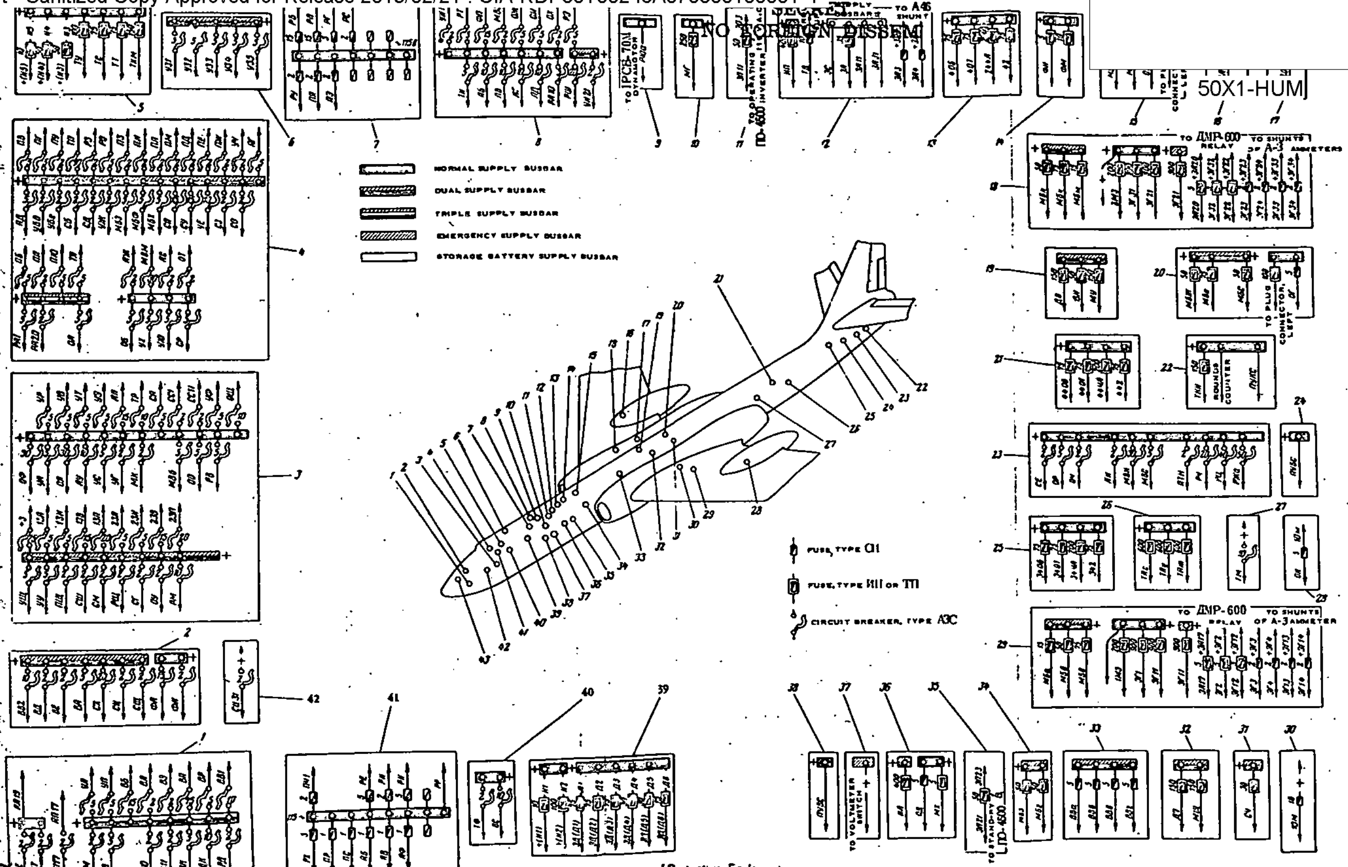

Fig. 64. Layout of Protective Equipment

1 – left-hand circuit breaker control panel of navigator; 2 – right-hand circuit breaker control panel of navigator; 3 – pilot's circuit breaker control panel; 4– co-pilot's circuit breaker control panel; 5 – de-icer system junction box; 6 – overhead electric control board of pilots; 7 – radar operator's fuse box, 115 V A.C.; 8 – circuit breaker control panel of radar operator; 9 – power lead-in on frame No. 12, starboard; 10 – hydraulic pump junction box; 11 – junction box of operating inverter; 12 – storage battery junction box; 13 – top mount supply system junction box; 14 – camera equipment junction box; 15 – fuel pump system junction box, right; 16 – right junction box of L.G. well extension lamp; 17 – right junction box of engine compartment extension lamp; 18 – distribution panel, right; 19 – dual supply system junction box, right; 20 – fuel pump system junction box at frame No. 49; 21 – bottom mount supply system junction box; 22 – power junction box of rear cabin; 23 – circuit breaker control panel of rear cabin; 24 – left power lead-in on frame No. 69; 25 – tail gun mount supply system junction box; 26 – tail unit de-icer system junction box; 27 – autopilot heater circuit breaker box; 28 – left junction box of L.G. well extension lamp 29 – distribution panel, left; 30 – left junction box of engine compartment extension lamp; 31 – junction box of flare bomb emergency dropping system; 32 – dual supply system junction box, left; 33 – combat release system junction box; 34 – fuel pump system junction box, left; 35 – stand-by inverter junction box; 36 – dual supply system junction box; 37 – emergency circuit lead-in on frame No. 12, port side; 38 – power lead-in on frame No. 12; 39 – dual supply system junction box; 40 – instrument panel of pilot; 41 – navigator's fuse panel, 115 V A.C.; 42 – flare bomb control board.

[redacted]

50X1-HUM

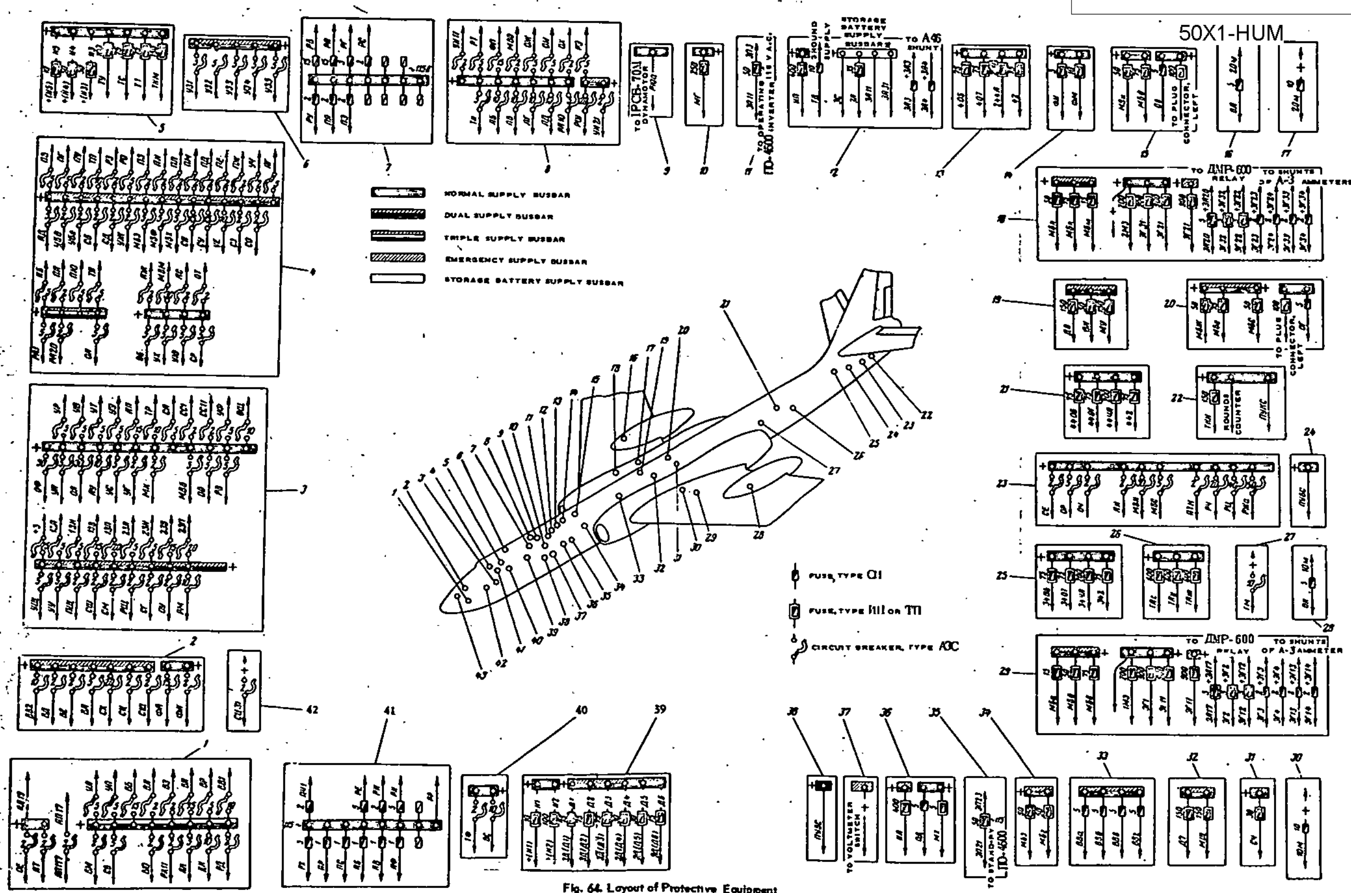

Fig. 64. Layout of Protective Equipment

1 – left-hand circuit breaker control panel of navigator; 2 – right-hand circuit breaker control panel of navigator; 3 – pilot's circuit breaker control panel; 4 – copilot's circuit breaker control panel; 5 – de-icer system junction box; 6 – overhead electric control board of pilots; 7 – radar operator's fuse box, 115 V A.C.; 8 – circuit breaker control panel of radar operator; 9 – power lead-in on frame No. 12, starboard; 10 – hydroulic pump junction box; 11 – junction box of operating inverter; 12 – storage battery junction box; 13 – top mount supply system junction box; 14 – camera equipment junction box; 15 – fuel pump system junction box, right; 16 – right junction box of L.G. well extension lamp; 17 – right junction box of engine compartment extension lamp; 18 – distribution panel, right; 19 – dual supply system junction box, right; 20 – fuel pump system junction box at frame No. 49; 21 – bottom mount supply system junction box; 22 – power junction box of rear cabin; 23 – circuit breaker control panel of rear cabin; 24 – left power lead-in on frame No. 69; 25 – tail gun mount supply system junction box; 26 – tail unit de-icer system junction box; 27 – autopilot heater circuit breaker box; 28 – left junction box of L.G. well extension lamp 29 – distribution panel, left; 30 – left junction box of engine compartment extension lamp; 31 – junction box of flare bomb emergency dropping system; 32 – dual supply system junction box, left; 33 – combat release system junction box; 34 – fuel pump system junction box, left; 35 – stand-by inverter junction box; 36 – dual supply system junction box; 37 – emergency circuit lead-in on frame No. 12, port side; 38 – power lead-in on frame No. 12; 39 – dual supply system junction box; 40 – instrument panel of pilot; 41 – navigator's fuse panel, 115 V A.C.; 42 – flare bomb control board.

[redacted]

50X1-HUM

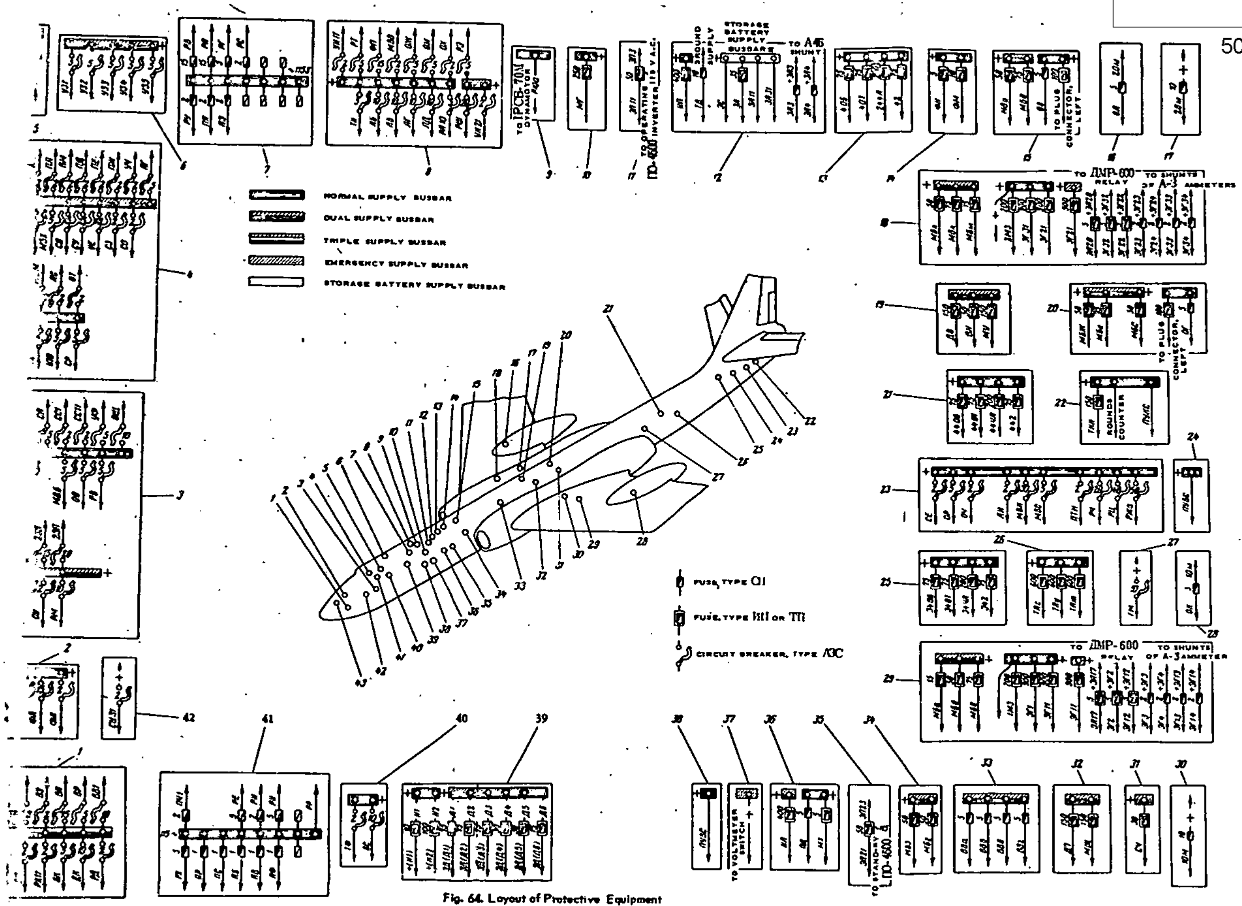

Fig. 64. Layout of Protective Equipment

er control panel of navigator; 2 – right
f panel of navigator; 3 – pilot's circuit
– copilot's circuit breaker control panel;
– box; 6 – overhead electric control
erator's fuse box, 115 V A.C.;
panel of radar operator; 9 – power
board; 10 – hydraulic pump junction
f operating inverter; 12 – storage battery
junction box; 13 – top mount supply system junction box; 14 – camera equipment junction box; 15 – fuel pump system junction box, right; 16 – right junction box of L.G. well extension lamp; 17 – right junction box of engine compartment extension lamp; 18 – distribution panel, right; 19 – dual supply system junction box, right; 20 – fuel pump system junction box at frame No. 49; 21 – bottom mount supply system junction box; 22 – power junction box of rear cabin; 23 – circuit breaker control panel of rear cabin; 24 – left power lead-in on frame No. 69; 25 – tail gun mount supply system junction box; 26 – tail unit de-icer system junction box; 27 – autopilot heater circuit breaker box; 28 – left junction box of L.G. well extension lamp; 29 – distribution panel, left; 30 – left junction box of engine compartment extension lamp; 31 – junction box of flare bomb emergency dropping system; 32 – dual supply system junction box, left; 33 – combat release system junction box; 34 – fuel pump system junction box, left; 35 – stand-by inverter junction box; 36 – dual supply system junction box; 37 – emergency circuit lead-in on frame No. 12, port side; 38 – power lead-in on frame No. 12; 39 – dual supply system junction box; 40 – instrument panel of pilot; 41 – navigator's fuse panel, 115 V A.C.; 42 – flare bomb control board.

50X1-HUM

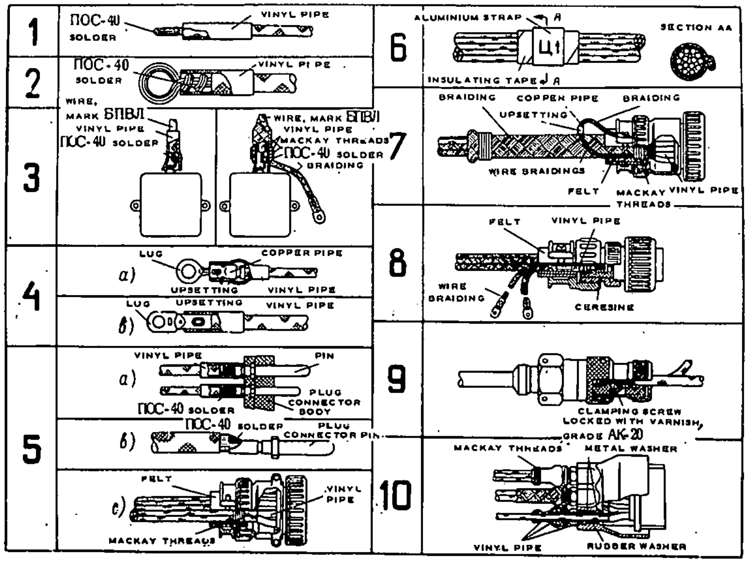

Fig. 65. Typical Wire Fittings

1 – soldered wire termination; 2 – loop termination; 3 – wire-to-capacitor attachment; 4 – lug termination of wire; (a) – for wires, gauging 0.35 to 0.5 sq.mm; (b) – for wires gauging 1 to 95 sq.mm; 5 – termination of plug connector wires; (a) – fitting the wires in plug connector pins and sockets; (b) – fitting the wires in plug connector pins and sockets with cutting off part of wire conductors; (c) – fitting the bunched conductor in plug connector; 6 – tagging the bunched connector; 7 – fitting bunched conductors consisting of six or more shielded wires in plug connectors; 8 – fitting the wires in fuel quantity gauge transmitter plug connector; 9 – fitting the wires in plug conn ctors with screw clamps; 10 – fitting the wires in flat plug connectors.

[redacted]

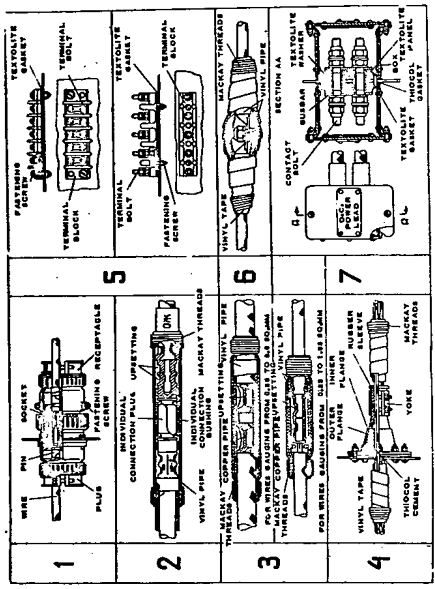

Fig. 66. Typical Wire Connections

1 – plug connector; 2 – individual connector; 3 – fixed connector; 4 – sealed lead; 5 – terminal block; 6 – bolt connection; 7 – power lead.

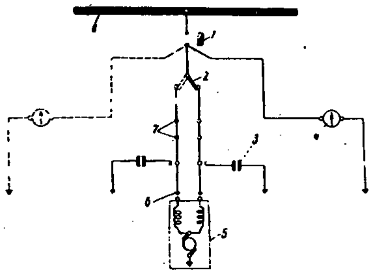

Fig. 67. Circuit Continuity Test without Commutating Relay

1 – fuse; 2 – change-over switch; 3 – capacitor; 4 – megohmmeter; 5 – mechanism; 6 – plug connector; 7 – terminals in junction boxes; 8 – plus busbar.

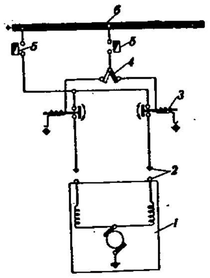

Fig. 68. Circuit Continuity Test with Commutating Contactor

1 – mechanism; 2 – plug connector; 3 – contactor winding; 4 – change-over switch; 5 – fuse; 6 – plus busbar.

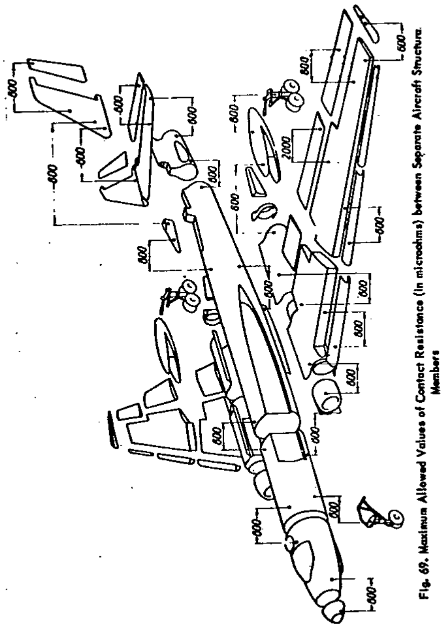

Fig. 69. Maximum Allowed Values of Contact Resistance (in microohms) between Separate Aircraft Structure Members

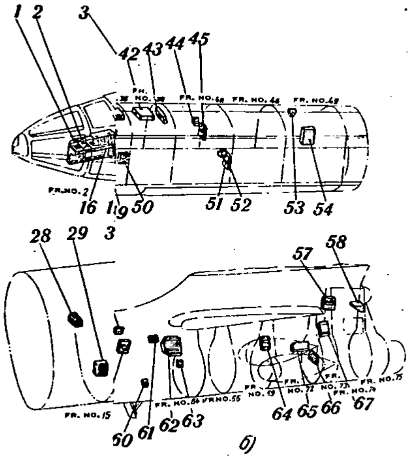

1 – bomb bay door control board an
of navigator; 2 – navigator's interpl ge
breaker control panel of co-pilot; 4 dual
junction box; 5 – trim tab control p
violet illumination rheostat control
ply control board; 8 – overhead ele
9 – fuelling control board at co-pilo
synchronisation control panel; 11 – stem
rer, type ПО-4500; 12 – junction b
rol panel at radar operator's station inter-
15 – relay box of stand-by inverter, itch
release electric control board; 17 – box;

50 – auxiliary fuel pump junction box; 51 – emergency supply system junction box; 52 – dual supply system junction box; 53 – power junction box; 54 – fuel pump system junction box, rear; 55 – range-finder supply system junction box; 56 – power junction box; 57 – rear cabin sound signalization system junction box; 58 – gun operator's electric control board; 59 – bliste mount fuse system junction box; 60 – switch andreceptacle box of extension lamp; 61 – power junction box; 62 – tail unit de-icer junction box; 63 – autopilot heater system circuit breaker box; 64 – tail gun mount fuse box; 65 – circuit breaker board of rear cabin; 66 – radio operator's electric control board; 67 – junction box of rear pressurized cabin; 68 – engine nacelle; 69 – L.G. fairing.

[redacted]

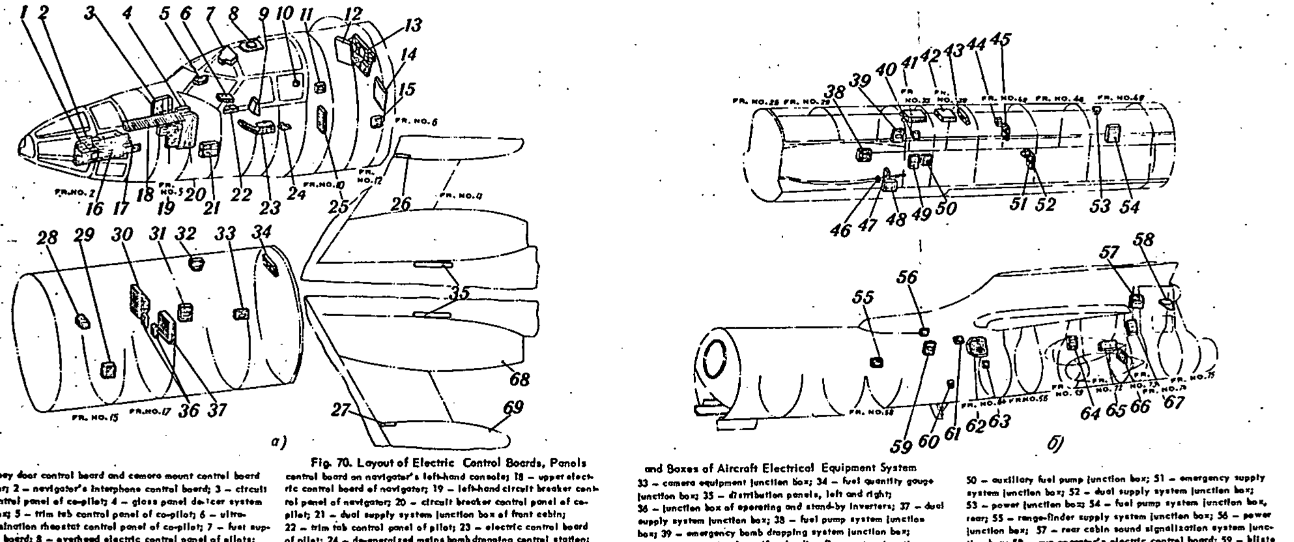

a) б)

Fig. 70. Layout of Electric Control Boards, Panels and Boxes of Aircraft Electrical Equipment System

1 – bomb bay door control board and camera mount control board of navigator; 2 – navigator's interphone control board; 3 – circuit breaker control panel of co-pilot; 4 – glass panel de-icer system junction box; 5 – trim tab control panel of co-pilot; 6 – ultraviolet illumination rheostat control panel of co-pilot; 7 – fuel supply control board; 8 – overhead electric control panel of pilots; 9 – fuelling control board at co-pilot's station; 10 – trim tab synchronization control panel; 11 – relay box of operating inverter, type ПО-4500; 12 – junction box, right; 13 – generator control panel at radar operator's station; 14 – junction box, left; 15 – relay box of stand-by inverter, type ПО-4500; 16 – bomb release electric control board; 17 – lower bomb release electric control board on navigator's left-hand console; 18 – upper electric control board of navigator; 19 – left-hand circuit breaker control panel of navigator; 20 – circuit breaker control panel of co-pilot; 21 – dual supply system junction box of front cabin; 22 – trim tab control panel of pilot; 23 – electric control board of pilot; 24 – de-energized mains bomb dropping control station; 25 – front cabin sound signalization system junction box; 26 – right junction box of L.G. and fuel pump relay systems; 27 – left junction box of L.G. and fuel pump relay systems; 28 – hydraulic pump junction box; 29 – ground supply system junction box; 30 – storage battery junction box; 31 – top gun mount fuse system junction box; 32 – power junction box; 33 – camera equipment junction box; 34 – fuel quantity gauge junction box; 35 – distribution panels, left and right; 36 – junction box of operating and stand-by inverters; 37 – dual supply system junction box; 38 – fuel pump system junction box; 39 – emergency bomb dropping system junction box; 40 – power junction box; 41 – landing flap system junction box; 42 – bomb release system junction box; 43 – fuze system junction box; 44 – emergency supply system junction box; 45 – dual supply system junction box; 46 – bomb bay doors interlock limit switch mechanism; 47 – bomb bay doors limit switch mechanism; 48 – fuel pump system junction box; 49 – de-energized mains bomb emergency dropping system junction box; 50 – auxiliary fuel pump junction box; 51 – emergency supply system junction box; 52 – dual supply system junction box; 53 – power junction box; 54 – fuel pump system junction box, rear; 55 – range-finder supply system junction box; 56 – power junction box; 57 – rear cabin sound signalization system junction box; 58 – gun operator's electric control board; 59 – blister mount fuse system junction box; 60 – switch and receptacle box of extension lamp; 61 – power junction box; 62 – tail unit de-icer junction box; 63 – autopilot heater system circuit breaker box; 64 – tail gun mount fuse box; 65 – circuit breaker board of rear cabin; 66 – radio operator's electric control board; 67 – junction box of rear pressurized cabin; 68 – engine nacelle; 69 – L.G. fairing.

[redacted]

50X1-HUM

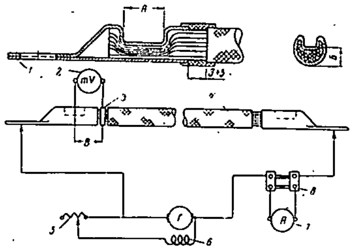

Fig. 71. Fitting the Aluminium Wire in Lug and Circuit Diagram for Measuring Contact Resistance At Aluminium Wire Fitting Point

1 – lug; 2 – millivoltmeter rated for up to 60 millivolts, class 0.5; 3 – contact yoke; 4 – wire, mark БПВЛА; 5 – adjusting rheostat; 6 – generator; 7 – ammeter, class 0.5; 8 – shunt of ammeter rated for up to 300 A

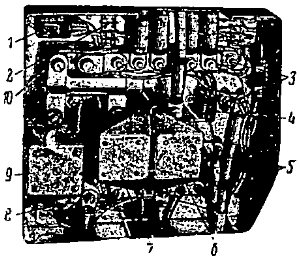

Fig. 72. Storage Battery Junction Box

1 – polarized relay, type РПП-А; 2 – terminal block; 3 – location of fuse, type ТП-400, for protection of operating inverter, type ПО-4500; 4 – blocking relay, type РП-2; 5 – locations of fuses, type ИП-35-2, for protection of instrument supply circuit in de-energized mains conditions; 6 – contactor, type К-300Д, for connecting storage battery to emergency supply circuit; 7 – contactor, type К-300Д, for connecting storage battery to normal supply circuit; 8 – location of fuse, type СП-10, for protection of storage battery heater circuit; 9 – contactor, type К-400Д, for connecting ground power supply source; 10 – shunt of ammeter, type A-1.

[redacted]

50X1-HUM

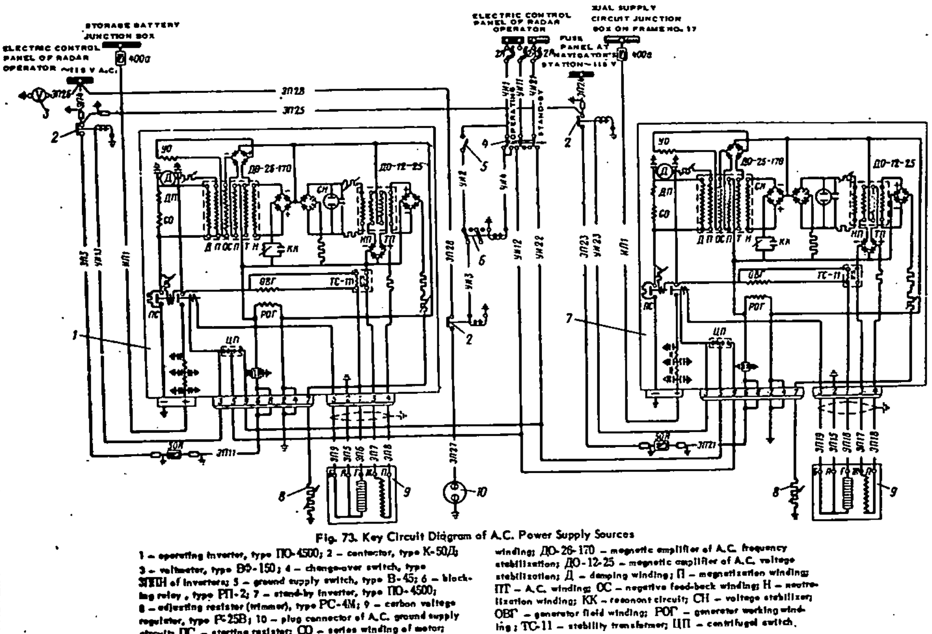

Fig. 73. Key Circuit Diagram of A.C. Power Supply Sources

1 – operating inverter, type ПО-4500; 2 – contactor, type К-50Д; 3 – voltmeter, type ВФ-150; 4 – change-over switch, type ЗПН of inverters; 5 – ground supply switch, type В-45; 6 – blocking relay, type РП-2; 7 – stand-by inverter, type ПО-4500; 8 – adjusting resistor (trimmer), type РС-4М; 9 – carbon voltage regulator, type Р-25В; 10 – plug connector of A.C. ground supply circuit; ПС – starting resistor; СО – series winding of motor; ДП – winding of motor commutating poles; УО – motor control winding; ДО-26-170 – magnetic amplifier of A.C. frequency stabilization; ДО-12-25 – magnetic amplifier of A.C. voltage stabilization; Д – damping winding; П – magnetization winding; ПТ – A.C. winding; ОС – negative feed-back winding; Н – neutralization winding; КК – resonant circuit; СН – voltage stabilizer; ОВГ – generator field winding; РОГ – generator working winding; ТС-11 – stability transformer; ЦП – centrifugal switch.

[redacted]

50X1-HUM

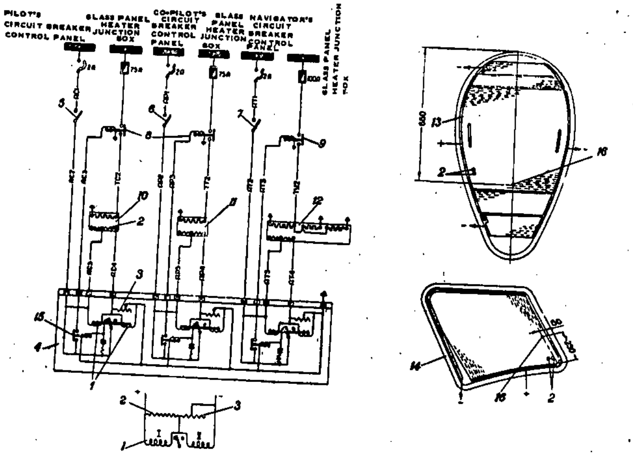

Fig. 74. Key Circuit Diagram of Glass Panel Heater System

1 – polarized differential relay, type РП-4; 2 – thermistor; 3 – adjusting rheostat; 4 – automatic temperature controller, type АОС-81М; 5 – switch, type В-45, of pilot's glass panel heater; 6 – switch, type В-45, of co-pilot's glass panel heater; 7 – switch, type В-45, of navigator's glass panel heater; 8 – contactors, type К-50Д; 9 – contactor, type К-100Д; 10 – glass panel of pilot; 11 – glass panel of co-pilot; 12 – glass panel of navigator; 13 – layout of heater elements in navigator's glass panel; 14 – layout of heater elements in pilot's glass panel; 15 – relay, type РВЗ-45; 16 – point at which glass temperature is measured.

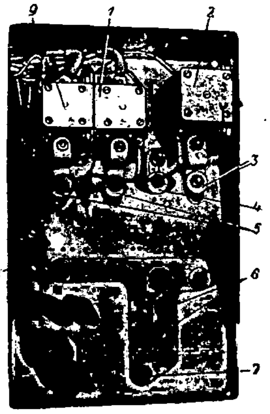

Fig. 75. Cabin and Glass Panel Heater System Junction Box

1 – contactor, type К50Д, of co-pilot's glass panel heater; 2 – contactor, type К-100Д, of navigator's glass panel heater; 3 – location of ИП-100 fuse of navigator's glass panel heater; 4 – location of ИП-150 fuse of front pressurized cabin heater; 5 – locations of ИП-75 fuses of glass panel heaters of pilot and co-pilot; 6 – locations of ИП-50 group protection fuses; 7 – location of ИП-10 group protection fuse; 8 – terminal block; 9 – contactor, type К-50Д, of pilot's glass panel heater.

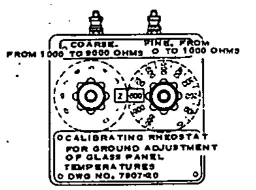

Fig. 76. Calibrating Resistance Rheostat

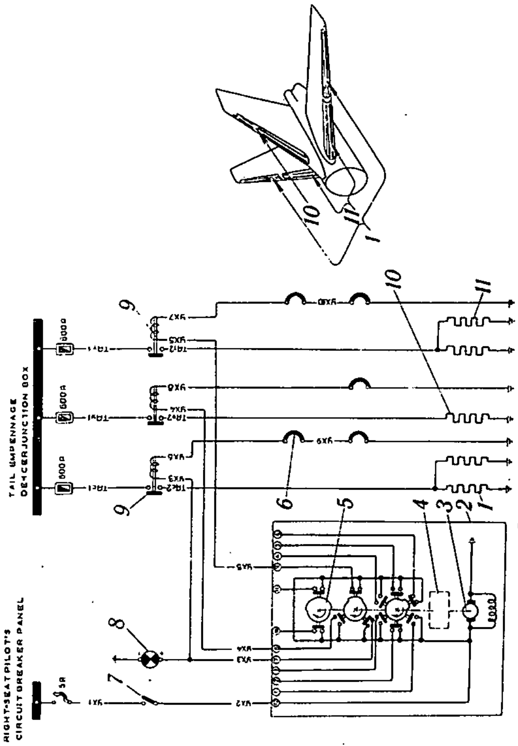

Fig. 77. Key Diagram of Tail Empennage De-Icers

1 – stabilizer de-icer outside sections; 2 – electric mechanism, type МКА-3А; 3 – electric motor; 4 – four-stage planetary reducer; 5 – contact device; 6 – thermoswitch, type 777В; 7 – switch, type В-45; 8 – warning lamp; type СПП-51, with white light filter; 9 – contactor, type К-600Д; 10 – fin de-icer section; 11 – stabilizer de-icer inner sections.

[redacted]

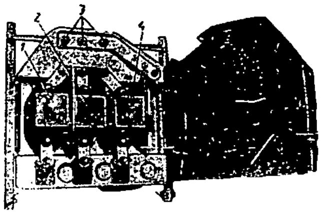

Fig. 78. Tail Empennage De-Icers Junction Box

1 – stabilizer outer section contactor, type К-600Д; 2 – fin section contactor, type К-600Д; 3 – attachment bolts of fuses, type ТП-600; 4 – stabilizer inner section conductor, type К-600Д.

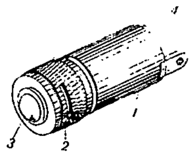

Fig. 79. Aircraft Coloured Warning Light, Type СЛЦ-51

1 – body; 2 – cap with nozzle; 3 – light filter; 4 – contact busbars.

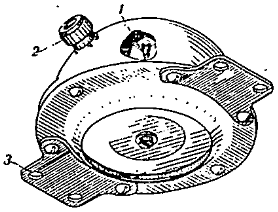

Fig. 80. Horn, Type C-1

1 – cap attachment bolt; 2 – inlet pipe union for conductors with a union nut; 3 – holes for attachment of the horn.

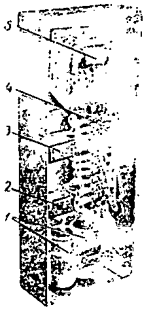

Fig. 81. Box of Front Pressurized Cabin Sound Signal Relay

1 – capacitor, type КЭ-1А-50 -$\frac{50}{\text{ohms}}$ – V; 2 – alarm signal relay, type РП-2; 3 – intermittent signal cutoff relay, type РП-2; 4 – terminal block; 5 – cabin pressure drop intermittent signal buzzer relay, type РЛ-12.

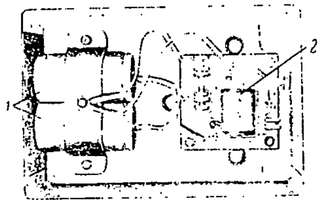

Fig. 82. Box of Rear Pressurized Cabin Sound Signal Relay

1 – capacitor, type КЭ-1А-50 $\frac{50}{\text{ohms}}$ – V; 2 – cabin pressure, drop intermittent signal buzzer relay, type РЛ-12.

[redacted]

50X1-HUM

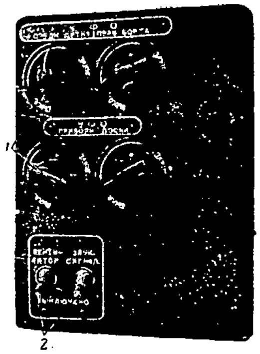

Fig.83. Right-Seat Pilot's Rheostat Panel

1 – rheostats, type РУФО-45; 2 – cutouts, type В-45.

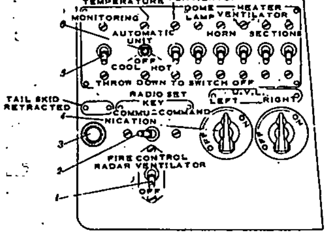

Fig.84. Gunner-Radio Operator's Electric Board

1 – switch, type В-45; 2 – change-over switch, type ПП-45; 3 – warning lamp, type СЛЦ-51, with green light filter; 4 – rheostat, type РУФО-45; 5 – change-over switch, type 2ПП-45; 6 – change-over switch, type П2НПП-45.

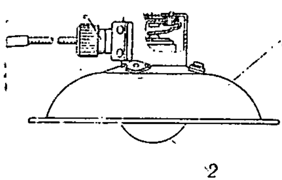

Fig.85. Dome light, Type ПС-45

1 – reflector; 2 – lamp; 3 – inlet pipe union for the conductor with union nut

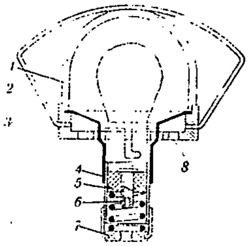

Fig.86. Dome light, Type ПСМ-51

1 – protective glass; 2 – glass and reflector attachment spring; 3 – dome light body; 4 – reflector; 5 – bush; 6 – contact pin; 7 – union nut; 8 – holes for the attachment of the dome light.

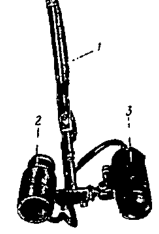

Fig.87. Lamp Hinged Bracket

hinged bracket; 2 – ultra-violet illumination lamp, type АРУФОШ-45; 3 – cabin lamp, type КЛСРК-45.

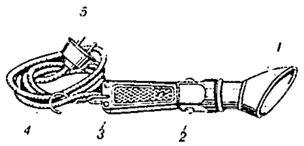

Fig.88. Extension Lamp, Type ПЛ-10-36

1 – reflector; 2 – switch; 3 – handle body; 4 – cord; 5 – plug.

[redacted]

50X1-HUM

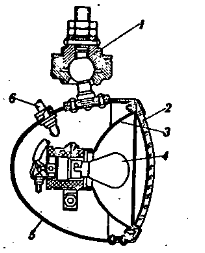

Fig.89. Taxiing light, Type ФР–100

1 – taxiing light attachment hinge bracket; 2 – protective glas 3 – reflector; 4 – lamp; 5 – casing; 6 – cord

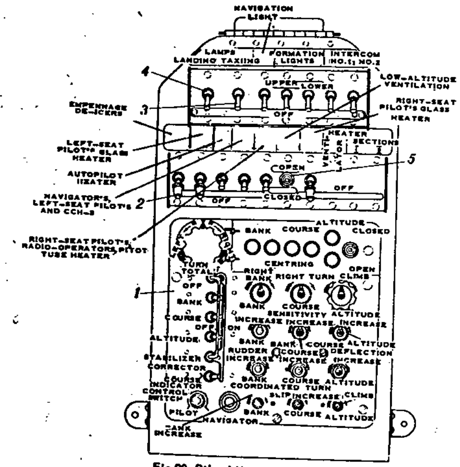

Fig.90. Pilots' Upper Electric Board

1 – АП–5–2М automatic pilot control panel; 2 – extension piece; 3 – switch, type B–45; 4 – change-over switch, type 2ПП–45; 5 – change-over switch type ПН–45М.

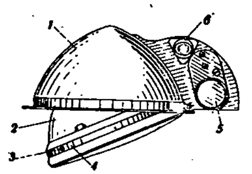

Fig.91. Landing Light, Type ЛФСВ–45

1 – landing lamp body; 2 – landing lamp retractible part; 3 – attachment screws; 4 – attachment ring; 5 – landing lamp control electric mechanism, type МПФ–2; 6 – plug connector.

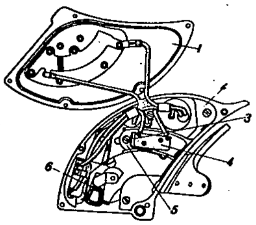

Fig.92. МПФ–2 Electric Mechanism Drive Box with Cover Open

1 – cover; 2 – body; 3 – screw; 4 – limit switch; 5 – plate; 6 – stop.

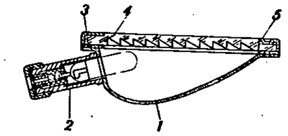

Fig.93. ПССО–45 Formation Lights Dome Lamp

1 – dome lamp body; 2 – socket holder with a union nut for the conductor; 3 – rubber gasket; 4 – polysterene light refractor; 5 – retaining ring.

50X1-HUM

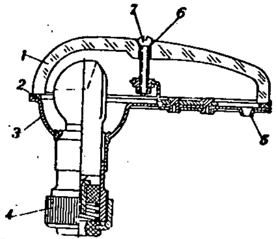

Fig.94. Navigation Light, Type БАНО-45
1 – glass light filter; 2 – packing gasket; 4 – base with socket; 4 – union nut; 5 – fitting attachment hole; 6 – lead washer; 7 – light filter attachment screw.

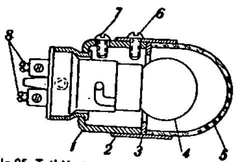

Fig.95. Tail Navigation Light, Type XC–39
1 – body; 2 – mounting; 3 – gasket; 4 – lamp; 5 – glass shade; 6 – glass shade attachment screw; 7 – fitting attachment screw; 8 – supply conductors attachment screw.

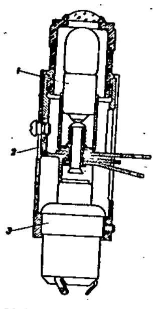

Fig.96. Push–Button Type Lamp
1 – lamp, type CM–30; 2 – body; 3 – button.

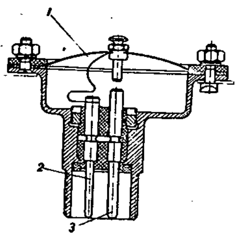

Fig.97. Fire Sensitive Unit
1 – diaphragm; 2,3 – fire–sensitive unit pins.

50X1-HUM

Fig.98. CO_2 and Neutral Gas Cylinders Discharge Bonnet

1 – discharge bonnet; 2 – firing gun.

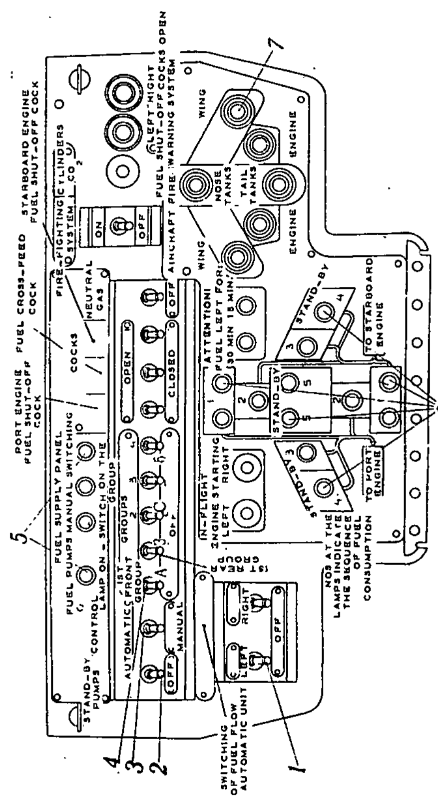

Fig.99. Pilots' Upper Electric Board

1 – fuel automatic control line switch; 2 – stand-by pumps switch; 3 – manual and automatic control switch; 4 – fuel pumps manual control circuit breakers; 5 – blue warning lamps; 6 – green warning lamps; 7 – fire warning and cylinder discharge bonnet switching push-button type lamp.

[redacted]

50X1-HUM

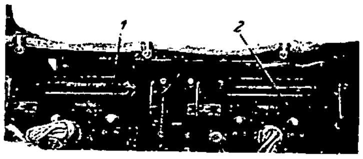

Fig.100. Fuel Gauge Amplifiers

1 – port group fuel gauge amplifier;
2 – starboard group fuel gauge amplifier.

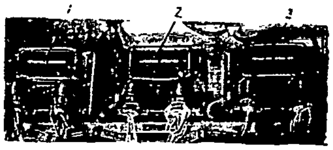

Fig.101. Fuel System Automatic Units

1 – port group automatic unit; 2 – starboard group automatic unit.

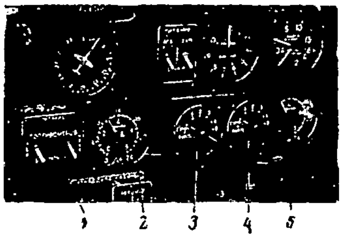

Fig.102. Right–Seat Pilot's Instrument Panel

1 –fuel–level gauge switches; 2 – port group fuel–level gauge indicator; 3 – port group fuel–level gauge change-over switch; 4 – starboard group fuel–level gauge change-over switch; 5 – starboard group fuel–level gauge indicator.

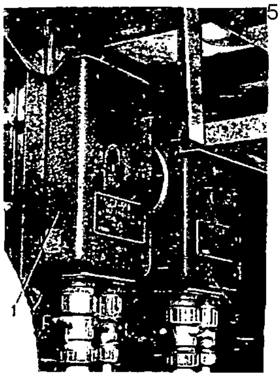

Fig.103. Thyratron Interrupters of the PTC–16 Fuelmeter

1 – port engine fuelmeter interrupter; 2 – starboard engine fuelmeter interrupter.

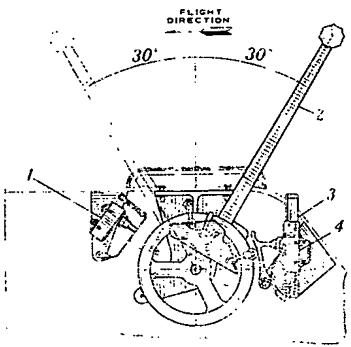

Fig.104. Throttle Control on the Right–Seat Pilot's Console

1 – flap sound signal limit switch; 2 – throttle control; 3 – horn cutoff button; 4 – landing–gear sound signal limit switch.

[redacted]

50X1-HUM

Fig.105. Left-Seat Pilot's Console

1 – flap change-over switch.

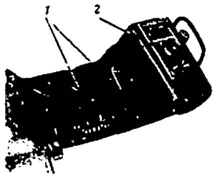

Fig.106. Right-Seat Console

1 – landing-gear sound signal cutoff button; 2 – flap change-over switch.

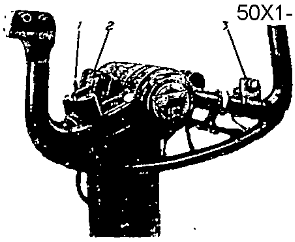

Fig.109. Right-Seat Pilot's Steering Wheel

1 – elevator trim tab switch; 2 – switch neutral position stop; 3 – automatic pilot emergency cutout button.

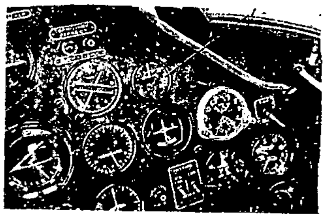

Fig.107. Right-Seat Pilot's Instrument Panel

1 – flap position indicator.

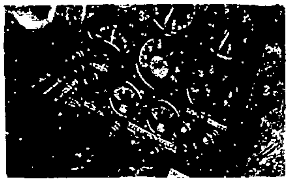

Fig.110. Left-Seat Pilot's Instrument Panel

– rudder trim tab neutral position warning lamp; 2 – aileron rim tab neutral position warning lamp; 3 – course indicator, type АП-5-2М КИП

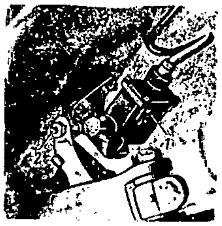

Fig.108. Limit Switch of Landing Gear Main Legs Extended Position Warning System

1 – limit switch; 2 – stop and adjusting screw of the limit switch.

Fig.111. Aileron Trim Tab Synchronization Panel

1 – synchronization panel; 2 – warning lamp; 3 – control switch; 4 – limit switch of the trim tab neutral position warning lamp with the panel cover closed.

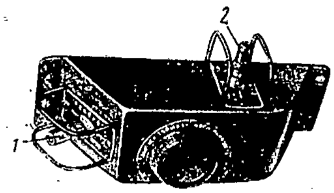

Fig.112. Left-Seat Pilot's Trim Tab Control Panel

1 – rudder trim tab control switch; 2 – aileron trim tab control switch.

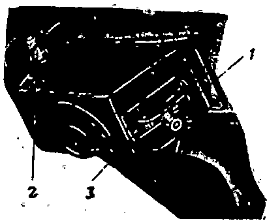

Fig.113. Right-Seat Pilot's Trim Tab Control Panel

1 – rudder trim tab switch; 2 – aileron trim tab switch; 3 – guard.

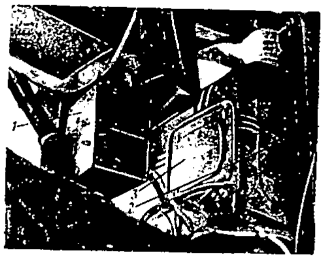

Fig.114. Rear Cabin Electric Heater (Unit 107)

1 – K–200Д contactor box; 2 – unit 107; 3 – hatch for access to unit 107.

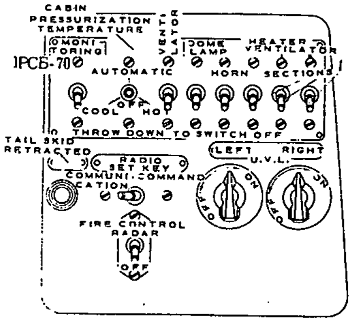

Fig.115. Gunner-Radio-Operator's Electric Board

1 – heater switches.

[redacted]

50X1-HUM

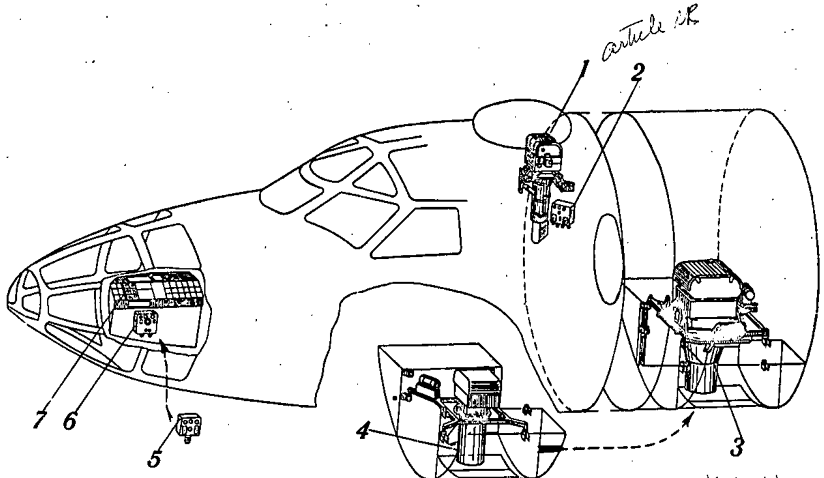

article IR

article N

Fig. 116. Photographic Equipment Arrangement Diagram

1 – camera ФАРЛ-1; 2 – ФАРЛ-1 camera controller; 3 – mount of camera АФА-33/М; 4 – mount of camera НАФА-3с/50; 5 – НАФА camera controller; 6 – camera controller КПУ-2 for camera АФА-33/М; 7 – tilting mount control panel.

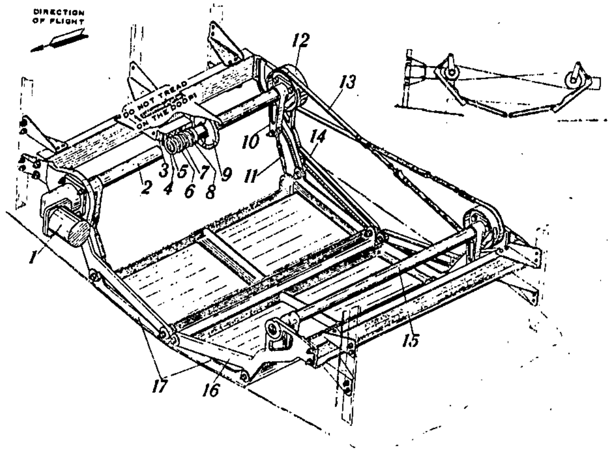

Fig 117. Camera Hatch

1 – electric mechanism УР-7М; 2 – driving shaft; 3 – bracket; 4 – cam; 5 – CAMERA HATCH OPENED limit switch; 6 – CAMERA HATCH CLOSED limit switch; 7 – НАФА camera interlocking microswitch; 8 – АФА-33/м camera interlocking microswitch; 9 – limiter; 10 – crankgear; 11 – turnbuckle; 12 – pulley; 13 – belt; 14 – guide; 15 – driven shaft; 16 – guide; 17 – camera hatch doors.

[redacted]

callout 7

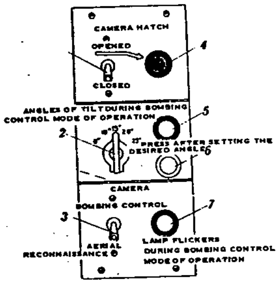

Fig. 118. Control Panel

1 – camera hatch door control switch; 2 – tilting angle change-over switch employed during the BOMBING CONTROL mode of operation; 3 – mode-of-operation selector; 4 – CAMERA HATCH OPENED (ЛЮК ОТКРЫТ) green indicating lamp; 5 – tilt angle setting indicating lamp during BOMBING CONTROL mode of operation; 6 – АФА camera tilt control button for BOMBING CONTROL mode of operation; 7 – camera tilting mount control indicating lamp for AERIAL RECONNAISSANCE mode of operation.

callout 3

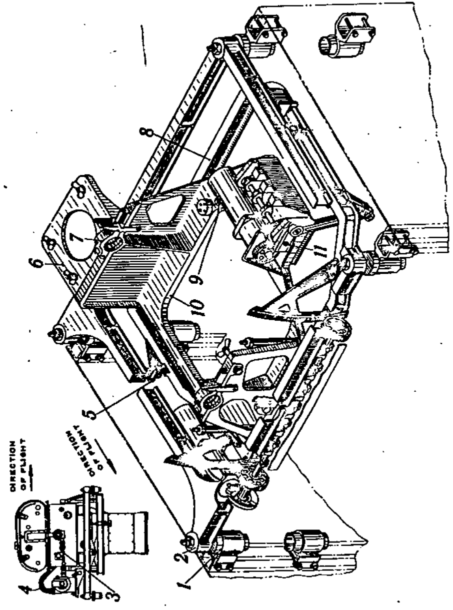

FIG. 119. Camera Automatic Tilting Mount AKAФУ-156H

1 – union nut; 2 – setting screw; 3 – carden shaft; 4 – flexible hose; 5 – semi-axle; 6 – plate for arranging the drive-and-pressure unit; 7 – clamp (cover); 8 – intermediate frame; 9 – button; 10 – inner frame; 11 – locking screw.

[redacted]

50X1-HUM

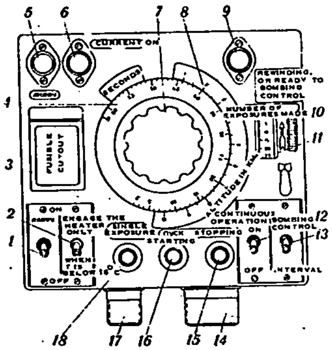

Fig. 120. Camera Controller КПУ-2

1 – АКАФУ mount operation switch; 2 – camera controller heater switch; 3 – fusible cutout cover; 4 – time interval setting scale (white colour); 5 – АКАФУ mount operation indicating lamp; 6 – CURRENT ON (ТОК ВКЛЮЧЕН) indicating lamp; 7 – setting dial; 8 – bombing altitude scale (yellow colour); 9 – REWINDING (ПЕРЕМОТКА) or READY TO BOMBING CONTROL (ГОТОВ К КОНТРОЛЮ БОМБОМЕТАНИЯ) indicating lamp; 10 – exposure counter zeroing disc; 11 – exposure counter; 12 – continuous functioning switch; 13 – BOMBING CONTROL (КОНТРОЛЬ БОМБОМЕТАНИЯ) – INTERVAL (ИНТЕРВАЛ) setting switch; 14 – camera controller cable connector; 15 – camera controller stopping button; 16 – starting button; 17 – two-pin plug; 18 – single exposure button.

callout 6

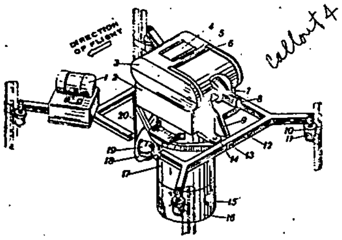

Fig. 121. НАФА Camera Mount

1 – converter; 2 – camera chamber portion; 3 – film magazine; 4 – plate; 5 – arrow indicating the flight direction; 6 – gate; 7 – sector; 8 – locking pin; 9 – movable frame; 10 – union nut; 11 – shock absorber; 12 – outer (fixed) frame; 13 – semi-axle; 14 – bracket; 15 – exposure setting knob; 16 – blind; 17 – camera taper portion; 18 – automatic release; 19 – photocell; 20 – suspension bracket.

callout 4

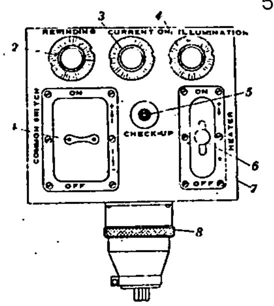

Fig. 122. НАФА-3с/50 Camera Controller

1 – common switch; 2 – REWINDING (ПЕРЕМОТКА) indicating lamp; 3 – CURRENT ON (ТОК ВКЛЮЧЕН) indicating lamp; 4 – ILLUMINATION (ПОДСВЕТКА) indicating lamp; 5 – CHECK-UP (ПРОВЕРКА) button; 6 – heater switch; 7 – housing; 8 – connector plug.

callout 5

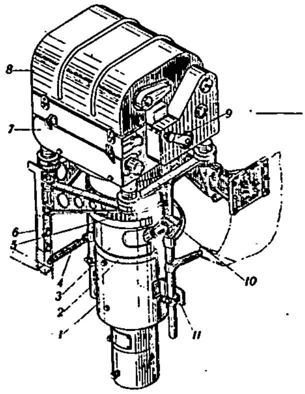

Fig. 123. ФАРЛ-1 Camera Mount

1 – cathode-ray tube; 2 – attachment ring; 3 – intermediate jacket; 4 – spring; 5 – focusing ring; 6 – locking stud; 7 – camera cover; 8 – film magazine; 9 – camera crank; 10 – guiding pin; 11 – clamp.

callout 1

50X1-HUM

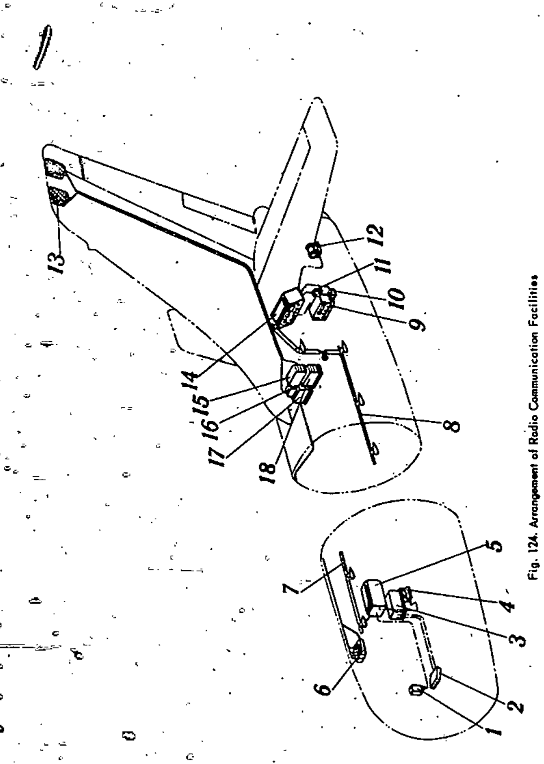

Fig. 124. Arrangement of Radio Communication Facilities

1 – remote control panel of command set 1-РСБ-70М; 2 - control panel of command set receiver УС-9; 3 – receiver УС-9; 4 - dynamotor У-600 of transmitter 1-РСБ-70М; 5 – transmitter 1-РСБ-70М of command set; 6 – control panels of command set РСИУ-3М; 7 – loop antenna of command set 1-РСБ-70М; 9 – receiver УС-9 of communication radio set; 10 – telegraph key panel of communication radio set; 11 – radio operator's electric board with monitoring switches and telegraph key; 12 – dynamotor У-600 of communication radio set transmitter; 13 – fin surface antennas РСИУ-3М; 14 – transmitter of communication radio set 1-РСБ-70; 15 – receiver No.2 of radio set РСИУ-3М; 16 – selenium rectifier of supply units РСИУ-3М; 17 – transmitter of radio set РСИУ-3М; 18 – receiver No. 1 of command radio set РСИ-3М.

Fig. 125. Interphone Set СПУ-10

1 – volume control (knob LOUDER); 2 – network switch; 3 – conference call button; 4 – function switch.

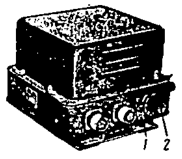

Fig. 126. Interphone System Amplifier

1 – white notch on gain control scale; 2 – gain control.

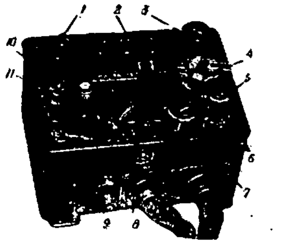

Fig. 127. Remote Control Panel of Receiver УС-9ДМ

1 – switch CRYSTAL; 2 – tuning scale window; 3 – scale illumination control; 4 – tuning knob; 5 – control BEAT NOTE; 6 – buttons ANTENNA ADJUSTMENT; 7 – volume control; 8 – band selector; 9 – switch AFC – off – MFC; 10 – voltage (115 V) indicating lamp; 11 – switch TGPH – TPHN

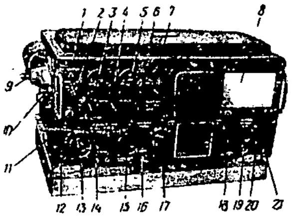

Fig. 128. Transmitter 1-РСБ-70М

1 – key CHECK; 2 – switch LOCAL – REMOTE; 3 – antenna current indicator; 4 – anode current indicator switch; 5 – anode current indicator; 6 – power selector switch; 7 – transmitter function switch; 8 – table to record results of transmitter tuning; 9 – terminal TRANSMITTER ANTENNA (АНТЕННА ПЕРЕДАТЧИКА); 10 – terminal RECEIVER ANTENNA (АНТЕННА ПРИЕМНИКА); 11 – channel selector; 12 – telegraph key socket; 13 – knob Д; 14 – jacks TELEPHONES no. 1 and No. 2; 16 – jack MICROPHONE; 17 – knob Г; 18, 20 – knobs A; 19 – knob A revolution counter; 21 – knob A corrector.

Fig. 129. Remote Control Panel of Transmitter of Command Radio Set 1-РСБ-70М

1 – button-telegraph key; 2 – red pilot lamp - station on-indicator

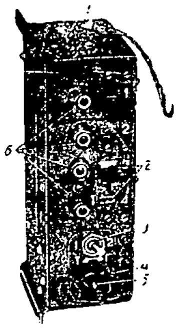

Fig. 132. Control Panel of Radio Set РСИУ-3М

1 – channel reset button; 2 – channel on-signalling windows (the third channel is on); 3 – receiver telephone output switch (protective clamp is removed); 4 – volum control limiter; 5 – volum control; 6 – channel selection buttons.

Fig. 130. Telegraph Key

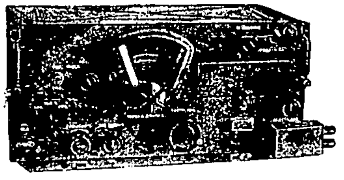

Fig. 131. Receiver УС-9

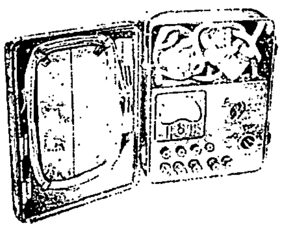

Fig. 133. Tester (unit 11)

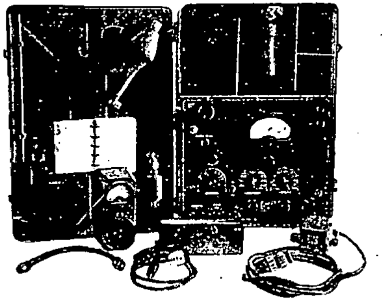

Fig. 134. Tester КСР-1

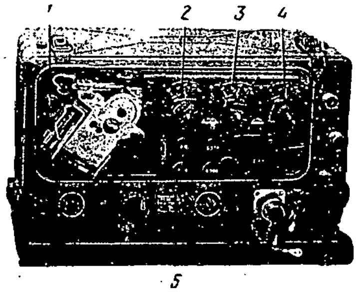

Fig. 135. Transmitter РСИУ-3М (unit A)

1 – channel reset button; 2 – tuning knob of master oscillator and first amplifier; 3 – tuning knob of second amplifier; 4 – tuning knob of power amplifier; 5 – crystals.

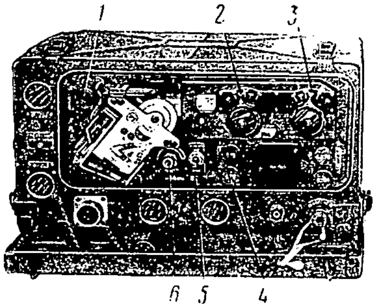

Fig. 136. Receiver РСИУ-3М (unit Б)

1 – channel reset button; 2 – tuning knob of local oscillator and U.H.F.; 3 – tuning knob of tripler and second mixer; 4 – crystal; 5 – noise limiter switch; 6 – sensitivity control.

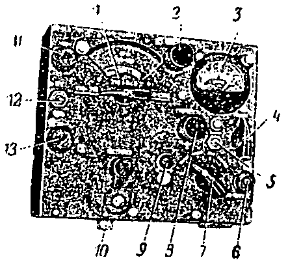

Fig. 137. Control Panel of Radio Compass АРК-5

1 – band switch and tuning scale АРК-5; 2 – scale illumination control; 3 – tuning indicator; 4 – loop antenna manual rotation switch; 5 – sensitivity control of tuning indicator; 6 – button to change over control from one panel АРК-5 to the other; 7 – function switch; 8 – volume control; 9 – green lamp indicates that panel is energized; beneath-spare scale illumination lamp; 10 – flexible shaft pipe connection; 11 – fuse for 28 V D.C. circuits; 12 – switch TGPH– TPHH; 13 – fuse for 115 V, 400 c.p.s. circuit.

[redacted]

50X1-HUM

Fig. 138. Radio Compass Course Indicator БСУП - 1

Fig. 139. Course Indicator УШДБ- 1

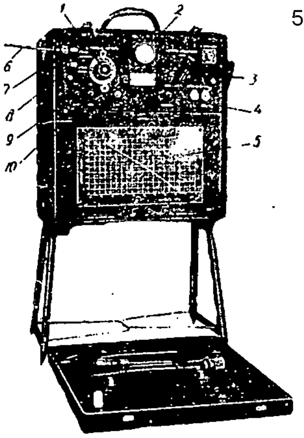

Fig. 141. Marker Beacon Simulator МИП - 48

1 – frequency setting limb MARKER; 2 – indicator; 3 – modulation switch; 4 – function switch; 5 – simulator tuning chart; 6 – antenna; 7 – socket BAND ANTENNA (АНТЕННА ДИАПАЗОНА); 8 – socket ANTENNA–CRYSTAL; 9 – supply switch; 10 – R.F. oscillation keing switch.

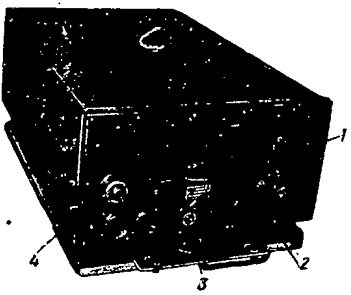

Fig. 140. Receiver of Radio Compass APK–5

1 – sensitivity control APK–5; 2 – terminal ANTENNA; 3 – terminal EARTH; 4 – flexible shaft pipe connection.

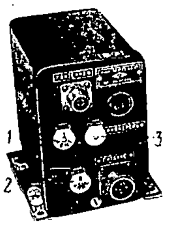

Fig. 142. Marker Receiver МРП - 48П

1 – circuit I tuner; 2 – circuit II tuner; 3 – jack for plug of check instrument for measuring relay current.

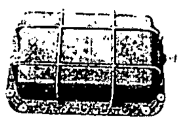

Fig. 143. Inboard Antenna of Marker Receiver МРП-48П

1 – cap of antenna tuning screw.

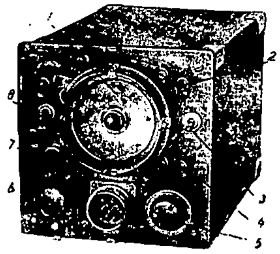

Fig. 144. Indicator PB-17

1 – screen; 2 – control knob ZERO CONTROL x 10; 3 – range scale switch; 4 – control knob ZERO CONTROL x 1; 5 – control knob DIRECT PULSE CONTROL–GAIN; 6 – control knob CIRCLE SIZE (РАЗМ. ОКРУЖ.); 7 – on-pilot lamp; 8 – supply switch.

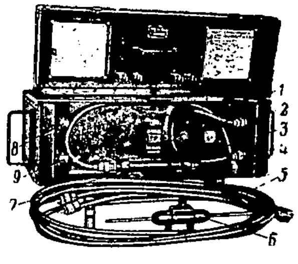

Fig. 145. Tester T–1

1 – bridging feeder Ф-3; 2 – socket Н-1; 3 – feeder Ф-2; 4 – socket В-1; 5 – two feeders Ф-1; 6 – antenna radiation indicator; 7 – attenuator; 8 – socket Н-2; 9 – socket В-2.

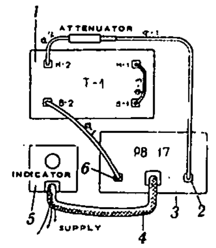

Fig. 146. Diagram Showing Connections of Radio Altimeter PB-17 to Tester T–1 for Measurement of Overall Sensitivity

1 – tester T–1; 2 – receptacle RECEIVING ANTENNA; 3 – transmitter-receiver PB-17 4 – cable connecting transmitter-receiver PB–17 to indicator; 5 – indicator of radio altimeter; 6 – receptacle TRANSMITTING ANTENNA; Ф1, Ф2, Ф3 – radio-frequency feeders; H–1, H–2, B–1 and B–2 - radio-frequency sockets of tester T–1.

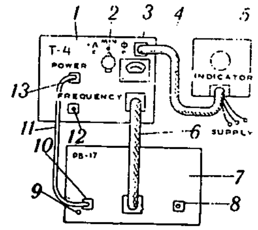

Fig. 147. Diagram Showing Connection of Radio Altimeter PB-17 to Tester T-4 for Measurement of Radiation Power of Transmitter PB-17

1 – tester T-4; 2 – switch POWER–FREQUENCY; 3 – receptacle TO INDICATOR (К ИНДИКАТОРУ); 4 – cable connecting tester T-4 to indicator PB-17; 5 – indicator PB-17; 6 – cable connecting tester T-4 to transmitter-receiver PB-17; 7 – transmitter-receiver PB-17; 8 – receptacle RECEIVING ANTENNA; 9 – control A; 10 – receptacle TRANSMITTING ANTENNA; 11 – radio-frequency cable connecting receptacle TRANSMITTING ANTENNA on transmitter-receiver PB-17 to receptacle POWER on tester T-4; 12 – receptacle FREQUENCY; 13 – receptacle POWER.

Fig. 148. Tester T-4

1 – instructions for tester; 2 – function switch; 3 – connector for cutting in indicator PB-17; 4 – powerlevel indicator; 5 – cable for connection to transmitter-receiver PB-17; 6 – T-joint; 7 – socket POWER; 9 – socket FREQUENCY.

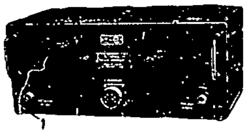

Fig. 149. Transmitter-Receiver PB-17

1 – control A for tuning transmitting antenna.

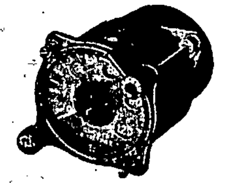

Fig. 150. Indicator ПРВ-46 of Radio Altimeter PB-3

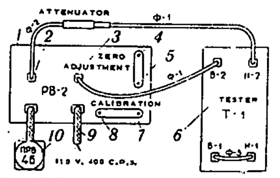

Fig. 151. Diagram Showing Connection of Radio Altimeter PB-2 to Tester T-1 for Checking Overall Sensitivity of PB-2 and Calibration of Readings at the End of Indicator Scale on 1st Band

1 – transmitter-receiver PB-2; 2 – receptacle RECEIVING ANTENNA; 3 – receptacle TRANSMITTING ANTENNA; 4 – control ZERO ADJUSTMENT-HIGH ALTITUDES; 5 – control ZERO ADJUSTMENT - LOW ALTITUDES; 6 – tester T-1; 7 – control CALIBRATION - HIGH ALTITUDES; 8 – Control CALIBRATION - LOW ALTITUDES; 9 – supply cables PB-2; 10 – altimeter indicator; Ф-1, Ф-2, Ф-3 - radio-frequency cables; B-1, B-2, H-1, H-2 – sockets of tester T-1.

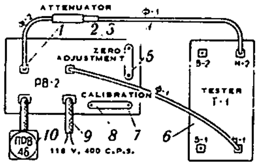

Fig. 152. Diagram Showing Connection of Radio Altimeter PB-2 to Tester T-1 for Calibration of Radio Altimeter Readins at the Beginning of Indicator Scale on 1st Band

1 – receptacle RECEIVING ANTENNA; 2 – receptacle TRANSMITTING ANTENNA; 3 – transmitter-receiver PB-2; 4 – control ZERO ADJUSTMENT-HIGH ALTITUDES; 5 – control ZERO ADJUSTMENT – LOW ALTITUDES; 6 – tester T-1; 7 – control CALIBRATION – LOW ALTITUDES; 8 – control CALIBRATION – HIGH ALTITUDES; 9 – supply cable; 10 – altimeter indicator; Ф-1, Ф-2 – radio-frequency cables; H–1, H–2, B–1, B–2 – sockets of tester T–1.

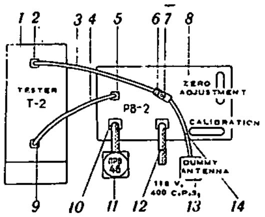

Fig. 153. Diagram Showing Connection of Radio Altimeter PB-2 to Tester T-2 for Calibration of Radio Altimeter Readings at the End of Scale on 2nd Band

1 – tester T-2; 2 – tester receptacle; 3 – radio-frequency cable to connect tester T-2 receptacle TRANSMITTING ANTENNA PB-2; 4 – cable connecting tester T-2 to receptacle RECEIVING ANTENNA PB-2; 5 – receptacle RECEIVING ANTENNA; 6 – red mark on adapter; 7 – adapter for connection of receptacle TRANSMITTING ANTENNA to tester T–1 and dummy antenna; 8 – transmitter-receiver PB–2; 9 – receptacle; 10 – receptacle TO INDICATOR; 11 – indicator of radio altimeter; 12 – supply cable; 13 – dummy antenna; 14 – radio-frequency cable.

[redacted]

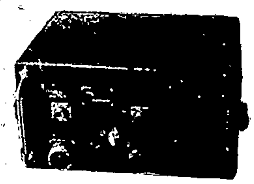

Fig. 154. Transmitter-Receiver of Radio Altimeter PB-2

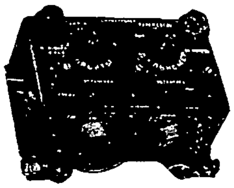

Fig. 155. Control Panel of Radio Range Finder СД-1

Fig. 156. Indicator ПРД-50 of Radio Range Finder СД-1

Fig. 157. Checking Radiation Power of Radio Range Finder

1 – transmitting antenna СД-1; 2 – power-level indicator; 3 – receiving antenna; 4 – aircraft skin.

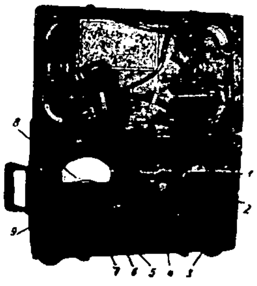

Fig. 159. Test Instrument КИПД-3

1 – tuning scale FREAUENCY Mc/s; 2 – tuning knob; 3 – socket for connection to receiver antenna; 4 – socket for connection to transmitter antenna; 5 – function switch; 6 – filament voltage control; 7 – supply switch; 8 – indicator; 9 – zero adjustment knob.

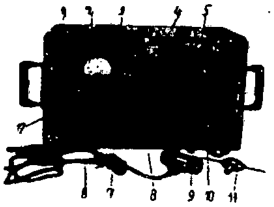

Fig. 158. Range Finder Test Instrument КИПД-1

1 – receptacle for connection to transmitter; 2 – voltmeter; 3 – voltmeter switch; 4 – communication channel selector (MODE OF OPERATION); 5 – scale RANGE–ORBIT; 6 – socket for connection to transmitter antenna (input); 7 – supply switch; 8 – switch RANGE BAND; 9 – cable with T-joint for connection of instrument КИПД-1 to transmitter СД-1; 10 – socket for connection of instrument КИПД-1 to receiver antenna; 11 – radiation indicator; 12 – button CHECK 250 V.

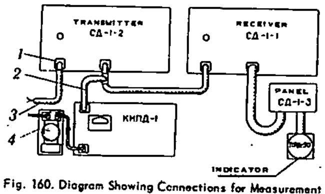

Fig. 160. Diagram Showing Connections for Measurement of Range Finder Supply Voltage

1 – supply receptacle of range finder; 2 – cable with T-joint for connection of instrument КИПД-1 to transmitter СД-1-2; 3 – supply cable СД-1; 4 – converter МА-100.

50X1-HUM

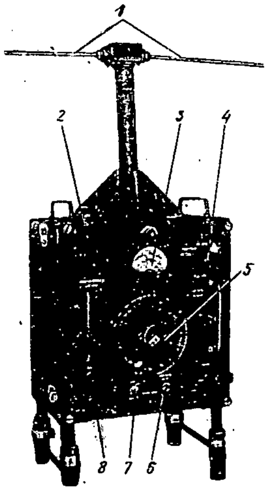

Fig. 161. Course Beacon Simulator КИРМ-Ф

1 – antenna; 2 – channel selector; 3 – indicator; 4 – function switch; 5 – limb for setting phase of modulation voltage; 6 – switch ZERO CHECK – OPERATION; 7 – switch COURSE – AZIMUTH; 8 – supply switch.

Fig. 162. Control Panel М-50

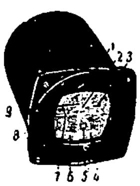

Fig. 163. Instrument Landing Indicator ПСП-48

1 – course pointer corrector; 2 – "black ring"; 3 – glideslope signalling indicator; 4 – yellow scale sector; 5 – course signalling indicator; 6 – blue sector of course scale; 7 – glide-slope pointer; 8 – glide-slope pointer corrector; 9 – course pointer.

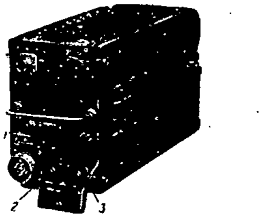

Fig. 164. Localizer Receiver КРП-Ф

1 – button CHECK; 2 – sensitivity control; 3 – control BALANCE.

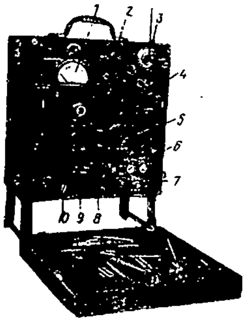

Fig. 165. Glide-Slope Beacon Simulator ГИРМ-2

1 – signal level indicator; 2 – R.F. signal level control knob; 3 – antenna; 4 – channel selector; 5 – control knob 150 c.p.s. LEVEL; 6 – socket for connection of simulator to glide-slope receiver; 7 – switch H.F. LEVEL – L.F. LEVEL; 8 – function switch; 9 – control knob 90 c.p.s. LEVEL; 10 – supply switch.

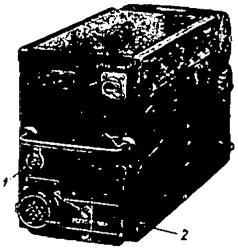

Fig. 166. Glide-Slope Receiver ГРП-2

– socket for connection of simulator ГРП-2; 2 – cover plate of controls BALANCE and SENSITIVITY.

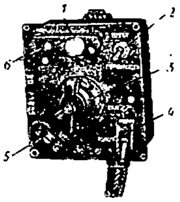

Fig. 167. Transponder Panel

1 – light control; 2 – switch READY-RESPONSE; 3 – code switch; 4 – switch DISTRESS SIGNAL; 5 – jacks PHONE; 6 – pilot lamps.

[redacted]

50X1-HUM

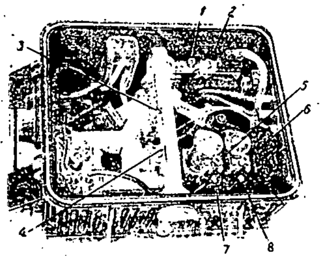

Fig. 168. Transmitter-Receiver P2, Inside View

1 – potentiometer R2–4 for adjusting AFC voltage on 1st channel; 2 – potentiometer R2–5 for adjusting AFC voltage on 2nd channel; 3 – screw for adjusting spark gap РЗП on 1st channel; 4 – screw for adjusting spark gap РЗП on 2nd channel; 5 – screw for adjusting crystal current on 1st channel; 6 – screw for adjusting crystal current on 2nd channel; 7 – screw for adjusting frequency of 1st channel klystron; 8 – screw for adjusting frequency of 2nd channel klystron.

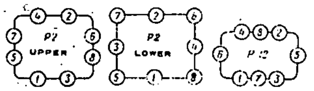

Fig. 169. Sequence for Screwing In and Out Bolts and Nuts on Units P2 and P12

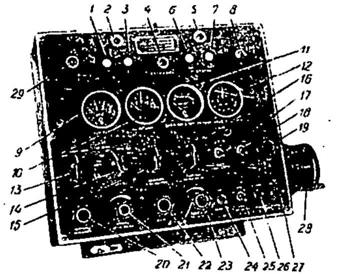

Fig. 170. Front of Operator's Panel P6

1 – button SUPPLY ON; 2 – button SUPPLY OFF; 3 – green pilot lamp to indicate that power is on; 4 – yellow lamp PRESSURE DROP SIGNALLING; 5 – red pilot lamp to indicate that transmitter is on; 6 – button TRANSMITTER ON; 7 – button TRANSMITTER OFF; 8 – switch FREQUENCY I–II; 9 – meter CHECK; 10 – meter SUPPLY; 11 – meter PRESSURE IN TRANSMITTER (ДАВЛЕНИЕ В ПЕРЕДАТЧИКЕ); 12 – meter ANTENNA TILT; 13 – switch AFC – BEACON; 14 – switch CHECK; 15 – switch RANGE KM; 16 – switch SWEEP DELAY KM; 17 – switch COURSE LINE; 18 – switch SECTOR SCANNING; 19 – knob potentiometer POSITION CONTROL R6–7; 20 – knob of potentiometer RECEIVER TUNING R6–8; 21 – knob of potentiometer RANGE MARKER BRIGHTNESS R6–5; 22 – knob of potentiometer "10–70" R6–3; 23 – knob of potentiometer ALTITUDE DELAY (ЗАДЕРЖКА НА ВЫСОТУ) R6–8; 24 – switch MARKERS; 25 – switch ROTATION; 26 – switch SEARCH; 27 – switch TILT; 28 – scale of potentiometer RANGE; 29 – adjusting screw of potentiometer ADJUSTMENT – 115 V R6–8.

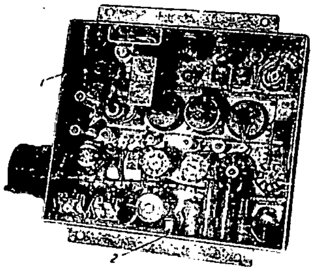

Fig. 171. Navigator-Operator s Panel as Viewed from Wiring Side

1 – potentiometer R6–65; 2 – potentiometer R6–57

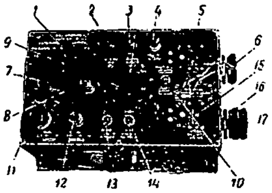

Fig. 172. Front of Bomb Aimer's Panel P9

1 – switch CALIBRATION; 2 – green lamp SUPPLY ON; 3 – red lamp SIGHTING BUTTON ON; 4 – knob of potentiometer SCALE ILLUMITATION R9–22; 5 – scale SLANT RANGE CORRECTION M; 6 – knob of potentiometer SLANT RANGE CORRECTION R9–12; 7 – knob of potentiometer RANGE SCALE R9–2; 8 – knob of potentiometer SPEED SCALE R9–2; 9 – potentiometer for adjusting slant range correction R9–13; 10 – switch SEARCH – AIMING; 12 – knob of potentiometer SPEED ZERO ADJUSTMENT R9–6; 13 – switch SPEED GENERATOR; 13 – switch ANTENNA TILT; 15 – scale TRACKING SPEED KM/HR; 16 – knob of potentiometer TRACKING SPEED R9–20; 17 – knob of potentiometer POSITION R9–23

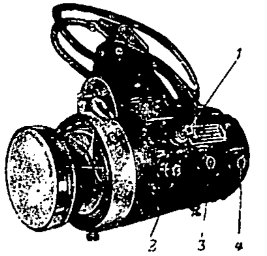

Fig. 174. Bomb Aimer's Indicator P8, Right Side View

1 – knob of potentiometer FOCUS R8–6; 2 – knob of potentiometer HORIZONTAL CENTRE R8–4; 3 – adjusting screw of potentiometer DRIFT CORRECTION R8–1; 4 – adjusting screw of potentiometer TRANSVERSE STABILIZATION R8–2.

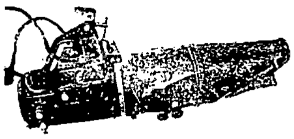

Fig. 175. Bomb Aimer's Indicator P8, Left Side View

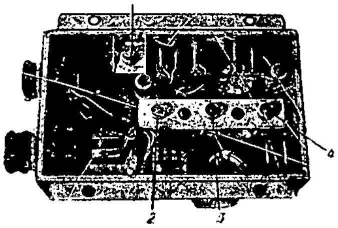

Fig. 173. Bomb Aimer's Panel P9 as Viewed from Wiring Side

1 – potentiometer R9–31; 2 – potentiometer R9–21; 3 – potentiometer R9–24; 4 – potentiometer R9–17.

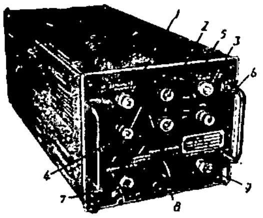

Fig. 176. Front Panel of Range Unit P3

1 – adjusting screw of range potentiometer SCALE R3–92; 2 – adjusting screw of step delay potentiometer SCALE R3–53; 3 – adjusting screw of altitude potentiometer SCALE R3–31; 4 – adjusting screw of range potentiometer ZERO R3–94; 5 – adjusting screw of step delay potentiometer ZERO R3–51; 6 – adjusting screw of altitude potentiometer ZERO R3–30; 7 – adjusting screw of frequency division potentiometer "5:1" R3–8; 8 – switch CALIBRATION,-OPERATION; 9 – adjusting screw of frequency division potentiometer "6:1" R3–22.

50X1-HUM

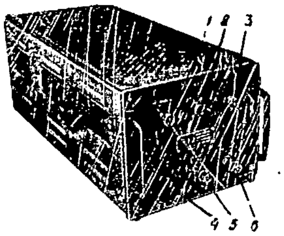

Fig. 177. Front Panel of Operator's Lock Unit P4

1 – adjusting screw of potentiometer AFC VOLTAGE R4–107; 2 – adjusting screw of potentiometer RANGE CONTROL R4–42; 3 – adjusting screw of potentiometer SWEEP AMPLITUDE R4–66; 4 – knob of potentiometer RECEIVER GAIN R4–106; 5 – knob of potentiometer LOW LEVEL R4–94; 6 – knob of potentiometer HIGH LEVEL R4–85.

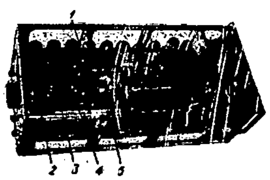

Fig. 178. Inside View of Bomb Aimer's Lock Unit P7

1 – potentiometer R7–130; 2 – potentiometer R7–40; 3 – potentiometer R7–138; 4 – potentiometer R7–139; 5 – delay line.

Fig. 179. Diagram Showing Connection of Device ПВ-52 when Determining Duration of Pulse for Automatic Switching of Optical Sight ОПБ-11Р

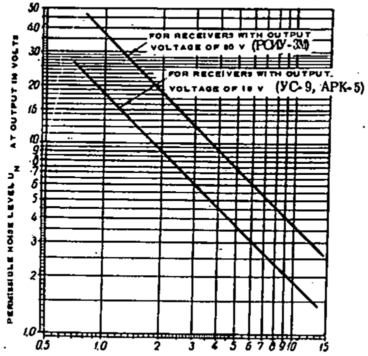

Fig. 180. Permissible Noise Level at Receiver Output as Plotted against Receiver Sensitivity

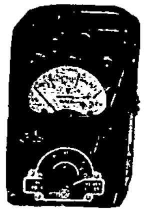

Fig. 181. Output Meter ИВ-4