VOLUME II - FINAL REPORT

[redacted]

STAT

APPENDICES
FINAL REPORT

February 9, 1968

Progress Report for period 23 November 1967
to February 9, 1968

[redacted]

STAT

VOLUME II

TABLE OF CONTENTS

APPENDICES

PART II

APPENDIX II-A

EFFECT of PITCH, ROLL, and YAW on MEASURING ACCURACY

APPENDIX II-A

EFFECT of PITCH, ROLL, and YAW on MEASURING ACCURACY

Figure II-A-1 illustrates the use of a measuring engine to determine the x-y coordinates of a point P as compared to those of a reference point R. Call the "true" coordinates of P "x,y" and call its measured coordinates "x_m, y_m". The "true" coordinates of the reference point may be assigned arbitrarily, hence they will be taken the same as the measured coordinates - "x_o , y_o ". Measurement involves first placing the reference point R at the reticle (optical axis). The coordinates x_o, y_o are thus read out. Next the point P is shifted to the reticle, as indicated by P' coinciding with R, and the coordinates x_m, y_m are read out. In the figure point R is shown shifted to R' and the X O Y axes are shown shifted to X' O' Y'.

In Figure II-A-1 it is assumed that the measuring engine has permitted a small rotation along with the displacement - in order to calculate the measurement error due to such rotation. For generality it is assumed that the measurement axes have their intersection (M) displaced from the reticle - by the amount d_2 in the x direction and the amount d_1 in the y direction.

From the diagram it may be seen that the measured displacement in the (-x) direction is

$$x_m - x_o = \overline{ab} = x \sec \phi + d_1 \tan \phi - x_o$$

where ϕ is the angle of rotation (yaw). Similarly, the measured displacement in the (-y) direction is

$$y_m - y_o = \overline{cd} = y \sec \phi - d_2 \tan \phi - y_o.$$

Hence the errors e_x and e_y in the measured coordinates are given by:

$$e_x = x_m - x = x(\sec \phi - 1) + d_1 \tan \phi \cong x \left(\frac{\phi^2}{2}\right) + d_1 (\phi)$$

and

$$e_y = y_m - y = y(\sec \phi - 1) - d_2 \tan \phi \cong y \left(\frac{\phi^2}{2}\right) - d_2 (\phi)$$

where the approximate expressions are valid for small values of ϕ.

Figure II-A-2 similarly shows the effect of pitch on the measured x coordinate of point P. A diagram similar to Figure II-A-2 would likewise show the effect of roll on the measured y coordinate of P. Evidently:

$$x_m - x_o = x \cos \phi - (d - x \sin \phi) \tan \phi - x_o = x \sec \phi - d \tan \phi - x_o$$

and likewise for $y_m - y_o$. These expressions are similar to those given above for the effects of yaw.

The measuring engines of the Stereocomparator have pitch, roll and yaw angles each substantially less than 10^{-5} radians. For angles this small the errors shown by the preceding formulas may be separated into two classes: those which vary directly with ϕ, and those which vary as the square of ϕ. Evidently errors in the latter category are so small as to be entirely negligible. Thus the magnitude of errors due to pitch, roll and yaw depends on the amount of separation between the measuring axes and the reticle (i.e., d_1 and d_2 in Figure II-A-1 or d in Figure II-A-2).

The measuring engines for the Stereocomparator are designed so the axes of the interferometer <u>intersect</u> the optical axis when seen in the plan view (i.e., $d_1 = d_2 = 0$). In either elevation view the plane of the interferometers is slightly less than 1/2" below the top of the film platen (i.e., $d \cong 12{,}700$ microns). Thus the effect of yaw on measuring accuracy is negligibly small.

From measurements made of the granite flatness and from dynamic measurements of air bearing deflections(1) it has been determined that pitch and roll angles are not more than about 2 microns divided by the separation between the support air bearings for the top stage. These distances are 20 inches in the x direction and 44 inches in the y direction. Thus, the effect of pitch and roll is not greater than

$$12700 \times 2/(20 \times 25400) = 0.05 \text{ microns.}$$

From the foregoing, it is seen that the errors in measurement which may be strictly charged to pitch, roll and yaw of the top stage are so small as to be probably undetectable with any practical means of calibration.

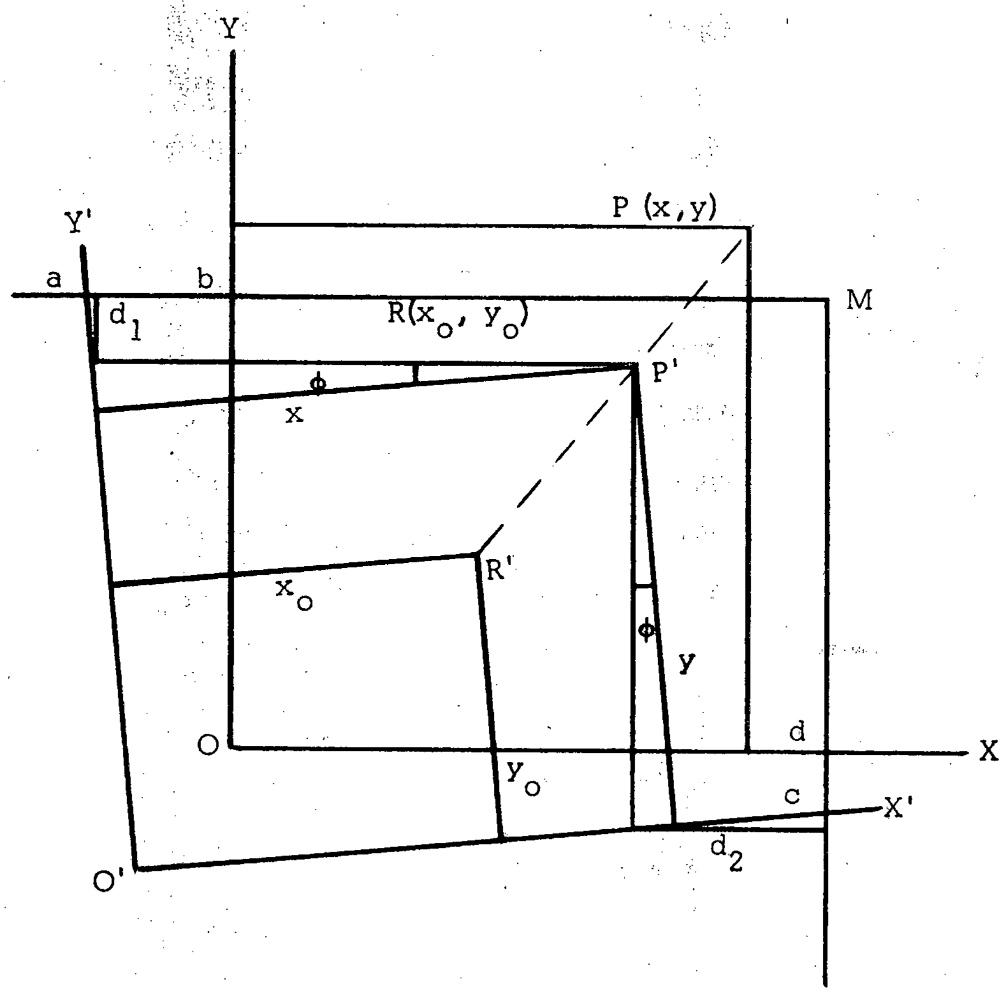

Figure II-A-1. Effect of yaw on measured x, y coordinates of point P as compared to those of reference point R.

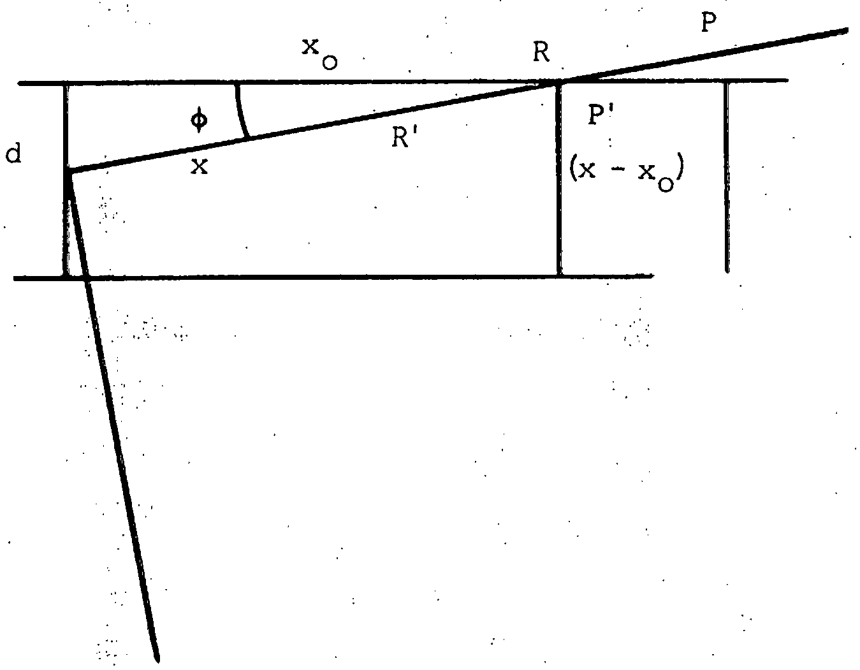

Figure II-A-2. Effect of pitch (or roll) on measured x (or y) coordinate of point P as compared to that of reference point R.

REFERENCES

Appendix II-A

(1) Task 10 - Air Bearings, Vol.IX

Task 42 - Breadboards and Test Services, Vol. X and XI

PART III

APPENDIX T16,17,18-A

TRIP REPORT

[redacted]

STAT

APPENDIX T16, 17, 18-A

TRIP REPORT

Company Contacted: [redacted] STAT

Date: Week of January 15, 1968

Persons Present: (Representing [redacted] STAT

(Representing

Detailed Drawings

[redacted] is starting to make up a drawing plan list and they are currently estimating a total of 1300 drawings. They only have been assigned 1000 drawing numbers, and therefore it will be necessary [redacted] to give them an additional drawing number assignment. They have requested a block of 500 additional numbers. STAT STAT

In the last month, [redacted] has increased their estimate for the total number of drawings from 700 to 1300. This is an increase of 85%. They are only just now realizing the magnitude of the drafting work that is before them. STAT

[redacted] did not understand how to use the [redacted] title block and drawing identification system. A group of sample drawing blocks was filled out for them to show the method of using the titles and the use of the next assembly drawing number system. STAT

[redacted]

(continued)

[redacted] usual method of calling out screws and nuts of standard sizes is to use a letter and number identification which can be referred to a catalog index which will then give the number of threads, the length and type of screw, and the diameter of the screw. This method was acceptable [redacted], except that it was necessary for [redacted] to include in the list of drawings the detailed tabulation identifying the various screw parameters in a manner that would allow specific identification of screws called out on the detailed drawings. The respective detailed drawings will call out the screw tabulation drawings in a manner similar to the usual standard parts call-out.

[redacted] was using a rather involved system for identifying the appropriate finish required on machined parts. [redacted] agreed to use the RMS surface smoothness system common in the United States.

[redacted] will use their regular tolerance method which is a letter-number system referring to a tabulated set of standard identifying symbols. They will provide a tabulation of the identifying symbols and standard part drawing.

[redacted]

(continued)

[redacted]

STAT

Zoom Systems Ranges

[redacted] stated that the reticle zoom system operates over the range of $\sqrt{\frac{1}{10}}$ and the $\sqrt{10}$ magnification. The main optical system zoom operates over the magnification ranges of the $\sqrt{10}$ to $\sqrt{\frac{1}{10}}$. Both the above systems zoom over a range of 10:1 but they are arranged to be in the opposite sense, that is, as the main zoom magnification increases, the reticle zoom magnification decreases.

STAT

Diffraction Limited Condition

In considering the size of the diffraction limited reticle spot, [redacted] pointed out that the limiting condition is not in the optical system of the reticle, but rather in the main optical viewing path between the zoom and the anamorphic lens system.' This arrangement has the effect of maintaining the reticle spot free from the diffraction limited condition during changes in

STAT

(continued)

the reticle system magnification. The reticle zoom has to decrease the diameter of the reticle spot to match the increases in the main optical path zoom system. Under these conditions, if a minimum size reticle spot had been set by the reticle system, then a further reduction in spot size by changes to the reticle zoom could produce a diffraction limited or otherwise defective reticle spot.

Having the diffraction limited system elsewhere in the system other than in the reticle spot projector, maintains a high quality reticle spot for all conditions of the reticle system.

<u>Main Illumination Variable Condenser System</u>

[redacted] had designed a moveable illumination condensor which focused the illumination at a point in the air beneath the film plane. Since a conventional condenser system places the image of the light sorce within the objective lens, it appeared that [redacted] design did not conform to usual practice. STAT STAT

[redacted] stated that their design actually did duplicate the conventional system; however the combination main zoom and objective lens placed the "center" of the lens system beneath the film plane from an optical standpoint. STAT

The location of this point moved as the objective was switched and as the main zoom lens magnification was changed. As the magnification increased, the optical center of the system moved upwards and towards the film plane.

[redacted] has agreed to provide a ray trace of this portion of the optical system in order to clarify the functioning of the various elements.

Eye Position Sensitivity and Exit Pupil Diameter

The exit pupil of the eye piece system is one millimeter in diameter, and the eye is located 20 millimeters from the last lens of the eyepiece assembly.

The normal eye has a pupiliary diameter of 3 millimeters; thus comparing the one millimeter diameter of the stereo comparator exit pupil with the 3 millimeter diameter of the entrance pupil of the eye, it seems that the eye may move 2 millimeters in any direction and still maintain full viewing of the field. Any movement of the eye in excess of two millimeters will result in portions of the field of view being cut off from the eye.

The numbers above are quite normal for microscope viewing, and [redacted] feels there is no problem for the operator of the equipment. Further, they set up an experiment with the parameters indicated above and it was noted that there was no particular difficulty in maintaining adequate sight of the field of view under these conditions.

The experiment as set up was quite definitive. The eye pupil consisted of a brass plate with a 1 millimeter diameter hole in it. A 90% contrast ratio target was located 25 cms away from the 1mm dia hole. Beyond the target was a diffusing screen and an illumination source variable up to 1.5 stilbs brightness.

No difficulty whatever was experienced in maintaining the proper eye alignment.

No difficulty whatever was experienced in maintaining the proper eye alignment.

Film Cooling

[redacted] presented [redacted] with the data on film cooling that had been obtained by tests [redacted] asked for a presentation by [redacted] of the entire subject of film cooling. A two-hour presentation was made to about 12 of the [redacted] technical personnel. The presentation included a detailed description of the equipment and tests used at [redacted] and the results of the test in terms of the energy absorbed by the film; the temperature of the film and the deduced brightness level at the eyepiece.

STAT STAT STAT STAT

It was shown that, for a temperature rise of approximately 10 degrees F, that a magnification of 200X and with 3.0 density film the brightness level at the eyepieces would be at least 0.025 stilbs, and coincidentally, the energy absorbed by the film would be not greater than 0.025 watts. The only experiments that had been performed at [redacted] were to do with the temperature and energy aspect of the film.

STAT

[redacted] was equipped with the facilities to perform compatible tests involving the optical aspects of the film cooling, and [redacted] agreed to cooperate in the performance of these tests. [redacted] also agreed that they were responsible for the film cooling design problem as a whole.

STAT STAT STAT

The group at the meeting was anxious to proceed on an immediate basis with this work, and [redacted] agreed to perform a vibration test. They were given typical parameters for air flow and the geometery of a possible air nozzle system, including a sketch for the experimental fabrication of the nozzle assembly onto a microscope.

STAT

(continued)

[redacted] assembled an optical system with a resolution of 1000 linepairs per millimeter, with a magnification of 200X and with 1.3 millimeter space between the film plane and the nose lens of the objective system.

The film plane consisted of a glass target, aluminized to a density in excess of 5.0. The target elements consisted of minute reticle spots of varying sizes from well into the diffraction limited range to perhaps about 10 times the diffraction limited size.

Both xenon and tungsten light sources were utilized and the light level could be changed from 0 to several stilbs as measured under the stereo comparator eyepiece conditions.

Air cooling was provided at room ambient air temperature, with a flow rate adjustable from 0 to about 200 cubic feet per hour. The tests showed that under the conditions stipulated, the temperature rise of the target was as predicted (about 10° F) and with the 90% contrast ratio target, the target information (6 spots in a circle) was readily resolvable at the minimum level of illumination, namely 0.025 stilbs at the eyepiece assembly. Further, there was no evidence of vibration caused by the jets of the air cooling system.

Note that a resolution of 1000 linepairs per millimeter at 200X represents lines that are one micron apart, and under the stereo comparator eyepiece conditions, these lines would subtend an angle of 3 minutes of arc.

Now considering that one micron on the film represents 3 minutes of arc, and that the eyepiece resolves 2 minutes of arc, then the resolution of 1000 line [illegible]

[illegible]

pairs per millimeter should be readily observed, and in actuality, this was found to be the case. For a target contrast ratio of 20%, the angle subtended at the eye must be between 3-1/2 and 4 minutes of arc. This is slightly over the 3 minutes of arc obtained above for a 100% contrast ratio target. In actuality, the difference produced a marginal condition of resolution, but considering that the condition is a limiting one, there should be no practical problem with the stereo comparator.

[redacted] position at this point is that the film cooling problem should not be of major concern, and that any further substantial experimental work should await the fabrication phase of the stereo comparator when the servo systems for limiting the brightness and various conditions of magnification and film density can be determined experimentally. STAT

The optical system of the stereo comparator as a whole is sufficiently complex to prohibit the exact determination of a limiting relationship without experiments performed on the actual assembled hardware.

[redacted] was told firmly that they were not relieved of their contractual responsibility for the design of the film cooling system, and that the experimental data [redacted] was provided for their information only. STAT STAT

Modulation Transfer Function Calculations

At the meeting between [redacted] of December 2, 1967, [redacted] STAT the optical consultant for [redacted] had recommended that the modulation function for STAT

the system be computed, and [redacted] offered to interpret the date and STAT
make a recommendation [redacted] A budgetary price estimate was made at the STAT
time [redacted] but the amount was deemed grossly excessive [redacted] and STAT
the performance of the computer work was left in abeyance.

In the past month, [redacted] has obtained additional information from [redacted] STAT
which is an optical institute in Paris. On this basis, they have now prepared a price quotation of 10,992 francs, with a time schedule of four weeks for performing the modulation function calculation.

[redacted], had interested himself in STAT
the problem and the reduced price for the work had been furnished by [redacted] STAT
[redacted] STAT

[redacted] has issued an appropriate purchase order to [redacted] to perform the cal- STAT
culations and the definitive resolution information should be available in about four weeks. The calculations will be made at 3 wavelengths for five zoom positions and for both of the objective positions, with data computed on the optical axis at 1/3 of the field diameter, and at the edge of the field.

Platen Glass Specification

In order to complete the detailed optical design [redacted] urgently requires the STAT
thickness of the platen glass and its refractive index. [redacted] agreed to provide STAT
information as soon as possible.

Resolving Power versus Brightness at the Eyepiece

[redacted] was asked to set up an experiment to show that the brightness level for the system currently specified [redacted] will provide satisfactory viewing for the stereo comparator film material.

STAT

STAT

The equipment as arranged consisted of a 2500 degree K tungsten standard light source, with a diffuser and a 90% contrast ratio target. The target was adjustable to subtend various angles in the system, but the test were made at 3 and 2 minutes of arc. The three minutes of arc represented a resolution of 1000 linepairs per millimeter at 200X.

The test system was provided with an eyepiece 25 centimeters from the target and with a 1 millimeter diameter pupil.

A 1.2 stilb at the eyepiece, which was the maximum specified eye brightness for the stereo comparator, the target was clearly visible at 3 minutes of arc, and was discernible at 2 minutes of arc for a 90% contrast ratio.

This test was performed under conditions of bright room lighting. The illumination level of the optical system was fully adequate, but was not considered excessive and there was no sensation of discomfort to the viewer.

The brightness level at the eyepiece was adjusted to 0.08 stilb and the target was again examined. The 3 minutes of arc target was readily resolved, but it was not possible to resolve the 2 minutes of arc.

The system was readjusted to 0.026 stilb at the eyepiece. It was found to be difficult to resolve 3 minutes of arc with the room brightly illuminated. When the room lighting level was reduced somewhat and the eyes had become adapted to the lower light level in the optical system it was found that the target for 3 minutes of arc could be resolved.

The light level at the eyepiece was readjusted to 0.008 stilbs and with the room brightly illuminated, it was not possible to resolve 3 minutes of arc. The room lights were extinguished and several minutes were allowed for the observers eyes to become dark-adapted. Under these conditions, it was possible to resolve 3 minutes of arc.

The system lighting level represented by the last brightness value is less than 1/3 the amount of minimum illumination specified for the stereo comparator.

The foregoing work was performed with a target contrast ratio of 90% and four observers took part in the test with their conclusions unanimous.

The work was repeated in a qualitative manner, using representative typical aerial film provided [redacted] In the worst case with the minimum level of illumination and with dark adapted eyes, and an eyepiece brightness of 0.008 stilb under open gate conditions, the qualified observer considered that the aerial film could be marginally but effectively interpreted.

STAT

From the practical standpoint, the foregoing tests are considered virtually an order of magnitude (~ 10X) more severe than is anticipated for the stereo comparator.

[redacted] STAT

(continued)

Main Illumination Filter Density

On the basis of the film cooling experimental date, [redacted] changed the density range for the main illumination filter system to 0 minimum and 5.0 maximum. The previous density maximum had been 4.0, and the original 3.0. [redacted] agreed to incorporate the new density value. STAT STAT

Schedule Review

[redacted] asked for a meeting at which [redacted] would be represented by the technical director and the chiefs of the various optical and engineering design groups would be present. The purpose of the meeting was to place before [redacted] a series of questions demanding an immediate answer. STAT STAT

1. What is the level of completeness of the [redacted] design contract. STAT
   Answer: 74% of the work has been performed, with 500 drawings completed out of a total of 1300 estimated. The illumination system is still undergoing conceptual design. The drawings yet to be finished are primarily in the category of detailing. The engineering design has been performed during the layout phases of the drafting work. Thus, the drawings remaining are relatively elementary in character, and require only a limited number of manhours for their completion.
2. Will [redacted] meet the design completion date of February 28, 1968? STAT
   Answer: Yes, they will. They understand that this date is critical and any slippage would have the effect of indicating a lack of ability to perform on the part [redacted] will look into the question of schedule in the course of the next few days in greater detail, and if there should be an important slippage past the date of February STAT

[redacted] STAT

(continued)

28, they will notify [redacted] immediately. STAT

3. What does [redacted] consider as their contractual status in regard to film cooling problem? Answer: [redacted] understands that they have the design responsibility. They are contemplating defering any extensive experimental work to the fabrication phase of the program. STAT STAT

4. On the basis of the December 2 meeting, [redacted] was to advise [redacted] regarding the performance specifications for the optics. When will this information be furnished? Answer: February 2, 1968. STAT STAT

5. When will [redacted] furnish [redacted] with the anticipated resolution level for the system? Answer: [redacted] will provide this information by February 2, 1968. This work should not be confused with the modulation transfer coefficient date to be determined by computer runs elsewhere in the program mentioned in this report. This work would involve on axis information only and would be on the basis of estimations by hand calculation. STAT STAT

6. Will [redacted] make the interpretation and analysis of the modulation transfer coefficient calculation? Answer: This work was not included in the quotation mentioned elsewhere in this report. [redacted] was directed to provide graphs showing the resolution in linepairs per millimeter for the various parameters stipulated for the computer computations. Any change of scope will be negotiated. (Note: This was done). STAT STAT

7. Does [redacted] accept the rejection [redacted] of the two-lamp main illumination system? Answer: Yes. We will follow as far as possible the system design suggestions offered [redacted] STAT STAT

(continued)

8. [redacted] moveable condenser drive for the illumination system has many mechanical interferences. A suggested layout to solve this problem has been tendered to [redacted] By what date will [redacted] definitely solve the problem and furnish [redacted] with the appropriate drawings? Answer: January 26, 1968. STAT STAT STAT

9. [redacted] has provided [redacted] with photographs of two typical briefing aids. [redacted] has likewise stipulated that [redacted] should make at least 5 briefing aids of 30 x 44" size. They have been given contract specifications covering this material. The briefing aids should include the following material: STAT STAT

   a. The overall optical system.

   b. The illumination system and the zoom system.

   c. Reticle system.

   d. The anamorph system and the image rotation system.

   e. The optical switching system.

10. A short written description should be provided for each of the briefing aid drawings. When will the information be completed [redacted] STAT Answer: February 28, 1968.

11. Ray trace information must be provided for the input and output elements of the optical system:

   a. The illumination moveable condensor, the objective, and the main zoom system.

   b. The eyepiece system. When will this information be available? Answer: February 28, 1968.

12. When will [redacted] select the drive equipment for the optical drives STAT

(continued)

and when will they furnish the inertia data for the optical system: Answer: February 2, 1968.

13. When will [redacted] fix the contour of the objective housing, especially this must include any housing for the film cooling equipment? Answer: January 25, 1968.

14. When will [redacted] provide brightness and specification data for the reticle and main illumination lamps. Answer: January 26, 1968.

15. [redacted] has been promising for six weeks to send the optical glass procurement specification [redacted] In addition, a price quotation is required. When will this information be provided: Answer: January 26, 1968.

16. Among the deliverable items are the following documents used during the design effort.

    a. Original tracings.
    b. Plan list.
    c. Computer printouts.
    d. Calculations.
    e. Graphs.
    f. Notebooks.
    g. Sketches.
    h. Etc.

When will [redacted] furnish this information? Answer: March 28, 1968.

17. [redacted] requires information regarding the depth of focus of the film plane for various magnifications and for the two objective lenses. When can

this information be provided. Answer: February 15, 1968.

18. In the original program, there was a planned visit by [redacted] to Berkeley in December 1967. Since [redacted] was behind the schedule at that time, it was agreed that there was apparently no necessity for such a trip; in fact, more specifically, that such a trip would be unprofitable and the only satisfactory situation would be for the [redacted] representatives to go to [redacted] in order to be able to interface with the many designers working on the different aspects of the problem. Also, in the original planning was the requirement that [redacted] make a trip to [redacted] at the end of the contract to review the details of the completed work to be sure that all interfaces are in order and the various specifications have been considered and met.

Considering the present and contemplated status of the program, what is [redacted] recommendation regarding the end of the program meeting? Answer: The final meeting of the program should definitely be held at [redacted] Only by this means can the many technical people participating in the program be present to explain the details of the design, and answer questions involving interface and specifications. It is not practical for [redacted] to send such a necessarily large staff to Berkeley for this type of consultation. Ordinarily the trip to [redacted] would be made by the technical director and the sales manager, but these people would not be able to discuss details of the program known only to the qualified engineers performing the design work. [redacted] recommends that [redacted] travel to Paris for this meeting.

19. It has been noted that [redacted] has available a reproduced tracing STAT material similar to the material furnished to [redacted] STAT requests that in the future [redacted] send their drawings on this mater STAT so that [redacted] may reproduce and utilize prints that are readable in place STAT of the present material that [redacted] has been sending which makes STAT almost unintelligible prints. Is this satisfactory to [redacted] ? Answ STAT Yes, they will reproduce their tracings for information purposes on the new material.

General Comments

[redacted] frequently states that this particular job is taking considerably more STAT time than they had anticipated, or, they will say, we didn't include that in our original pricing, but we do see that it has to be done, etc., etc., etc.

The evidence is that they are over-running the program from the fact that there are 85% more drawings than they had anticipated, plus the fact that the program is apparently running a least one month behind schedule. [redacted] expresse STAT a great interest in getting the work done and meeting the February 28 deadline.

[redacted] has said that they want to maintain the [redacted] image as a good STAT performer so that they can be considered for the follow-on hardware, that is, be considered without performance criticism. They are discovering new problems almost daily and the cost of these items was definitely not in their original price estimate. [redacted] has given very little personal attention to the design details STAT of this work, and his engineering personnel seem extremely competent, but I believe the project lacks direction and organization.

[redacted] Trip Report
(continued)

[redacted] is not running this work as a project - rather, it is as a technical STAT group which appears to make its own decisions for different aspects of the job, often without significant consultation with the other [redacted] groups. STAT

Overall, the [redacted] staff members are extremely cooperative, and when a pr STAT arises they will usually accept an [redacted] suggestion as if it were a technical dir STAT, even though the suggestion was perhaps relatively superficial.

For a development project such as the Stereo Comparator, [redacted] has demon STAT strated one almost overwhelmingly good characteristic - they allow the [redacted] STAT representative to consult in depth with their technical personnel, and apparently hold nothing back so that sensible judgments and course direction may be made during the project. In addition, they seem to ignore possible changes of scope, that is, they appear to consider the project as a job to be done rather than as a contract to be fulfilled.

Up to this point in the program, at least, there are no regrets in the matter of selecting [redacted] as the optical design vendor. STAT

APPENDIX T24-A

OPERATING INSTRUCTIONS FOR THE IMAGE ANALYSIS SYSTEM

[redacted] STAT

TECHNICAL REPORT

4 JANUARY 1968

OPERATING INSTRUCTIONS FOR THE IMAGE ANALYSIS SYSTEM

[redacted]

STAT

PFR-68-002

OPERATING INSTRUCTIONS

This volume contains instructions for the operation, checkout, and servicing of the Image Analysis System.

1. TURNON PROCEDURE

When the POWER switch on the front panel is placed in the ON position, the entire Image Analysis System is energized. Since there are no time delays in any part of the interfacing equipment, no particular turnon order is necessary. It is recommended, however, that the correlation inhibit signal be present either before or during the energizing process to keep meaningless signals from the servo elements.

2. WARMUP TIME

Although warmup time is expected to be quite short, a definite length can be established only after the complete stereo system has been tested. The unit may be used immediately after turnon; however, it is possible there will be some reduction in accuracy.

3. OPERATOR ADJUSTMENTS

The Image Analysis System has been designed for a minimum number of operator adjustments. We have recommended that two controls, X raster position and Y raster position, be located on the stereo system control panel. This will permit the electrical axes to be adjusted until they correspond to the optical axes. These are the only controls available to the operator.

4. MARGINAL CHECKING

Because of the operating procedure of the Image Analysis System, most sudden failures will be detected by the operator as a decrease in automatic correlation or a complete loss in stereo fusion. Gradual deterioration of circuit performance is difficult to detect during normal operation. For this reason, a routine marginal checking procedure is recommended.

Two tests are given below to detect gradual deterioration of gains and circuit performance which may not produce visible difficulties during normal operation. A sudden drop in performance would indicate the need for servicing and adjustment.

Correlation Quality Threshold. Calibrated test images (to be specified) should be used to check the correlation quality threshold. When the images are registered and lockon is achieved, reduce the light intensity by means of neutral density filters or other suitable means until correlation fails. At this point correlation quality is zero. Record the light level or filter value.

Lockon Range. Using calibrated test scenes, register the images and inhibit correlation. Displace one image in X, relative to the other, an amount equal to 5 percent of the image diameter at the image dissector. Correlate and measure the rise time of parallax error signals. Record the rise time.

Table 1 — Service Procedures*

Malfunction and Possible Cause	Test
Loss of correlation	
Correlation quality level 0 (correlation enable line normal)	Check scan waveforms at chassis test points and time base if no output. If time base outputs are normal, replace or test sum and difference board.
	Check video signals at chassis test points. If no outputs are obtained, measure direct current to deflection amplifiers; if normal, check image dissector assembly (video amplifier, dynode regulator).
	If both video outputs are normal, replace or test channel selection board.
Correlation quality signal level 1	Check X and Y parallax error signals. If outputs are zero or saturated, replace or check parallax analyzer board.
	If parallax error signals are normal, replace or check modulator board.
	Replace or check sum and difference board.
Reduction in pull-in capability (correlation otherwise normal)	Check or replace video correlator, band A_1 or band A.
	Check or replace channel selector.
Correlation erratic	Check or replace channel selector, channel selection logic board or distortion analyzer.
Error signal response slow (pull-in normal)	Check video output. Check dynode regulator. Check image dissector focus.
	Check parallax analyzer.
	Check distortion analyzer.
	Check integrator.
Error output greater than specified	Check and recalibrate parallax analyzer for parallax errors.
	Check and recalibrate distortion analyzer for first-order errors.
	Check and recalibrate integrator.

*These procedures are given only as an aid in troubleshooting down to the circuit board level. Refer to system and individual circuit board test procedures for further information.

APPENDIX T24-B

BREADBOARD TESTS AND COMPONENTS OF THE IMAGE ANALYSIS SYSTEM

[redacted] STAT

TECHNICAL REPORT

4 JANUARY 1968

BREADBOARD TESTS AND COMPONENTS OF THE IMAGE ANALYSIS SYSTEM

[redacted]

STAT

PFR-68-003

BREADBOARD TESTS AND COMPONENTS

This volume contains the results of the breadboard tests of the Image Analysis System circuits. Two circuits were breadboarded and tested on this program: (1) a deflection amplifier (schematic 126908) and (2) a time base oscillator phase lock (schematic 126896). Certain proprietary circuits were tested to determine their suitability for this program. These include a video amplifier, video correlator, analyzer, and modulator. The results of these tests are summarized below. Table 1 lists the components used on the breadboards. Final disposition of the material will be agreed on at a later date.

DEFLECTION AMPLIFIER

The deflection amplifier requires a voltage to current amplifier with an output of ±75 milliamperes. Since bandwidth requirements must be high enough to preserve a relatively sharp corner on the triangular waveform output, the full bandwidth output should exceed 250 to 300 khz. In addition, there should be low drift operation over long periods of time with some variation in temperature.

An attempt was made to use a standard high performance operational amplifier (Analog Device type 116) for deflection using current feedback. However, difficulty was encountered in stabilizing the device with the inductive load of the deflection coil. Also, since full output bandwidth was less than has been expected, another circuit was designed which employed a wideband operational amplifier to drive a complementary transistor output stage (schematic 126908).

Test results on this circuit, particularly with respect to ease and flexibility of stabilization and frequency response, were encouraging. Fig. 1 shows the output current waveform and deflection coil voltage for a triangular input waveform. The output current is 150 milliamperes peak to peak, and the voltage is 16 volts maximum peak to peak. Current output was identical to the input waveform, with a small delay (less than 2 microseconds). Fig. 2 shows the turnaround region at an expanded time scale.

The stability of the amplifier (Fig. 3) was measured over a period of 5 hours. Drift was less than 300 microvolts from turnon, which is less than 1/5 of the specification tolerance.

TIME BASE OSCILLATOR

The time base oscillator must be synchronized to 120 hz derived from the power line, and low frequency hunting or instabilities should be minimized. The oscillator was breadboarded using an integrated circuit level detector connected as a multivibrator with an FET used as one of the frequency determining elements (schematic 126896). A voltage variation (±25 khz) at the FET gate changes the frequency of the oscillator, nominally 460 khz. The oscillator output was divided by 4,000 using a frequency counter and two flip-flops. This output was compared to an external 120-hz input by means of a phase detector. (The divider ratio on the final design is 3,840.)

The final breadboard circuit gave positive lockon with relatively fast response (see Fig. 4). The 120-hz component in the control voltage was attenuated sufficiently so that no evidence of jitter was observed in the oscillator output waveform.

VIDEO AMPLIFIER

The frequency response of the video amplifier (Fig. 5) indicates a 3 db drop at 9 khz and 1.2 mhz. Although the low frequency response is satisfactory for this application, the high frequency response could, if necessary, be reduced to about 400 khz to improve the overall video signal to noise ratio.

The range of automatic gain control is shown in Fig. 6. If some clipping of the output waveform is tolerated, then the range of control can be greater than 1,000:1. However, to ensure greater accuracy of the correlation system, clipping should be avoided (this reduces the effective range to about 30:1). The additional control range has been provided by adding a dynode regulator to the photomultiplier section of the image dissector.

VIDEO CORRELATOR

Tests were carried out on the A band correlator. Fig. 7 shows the frequency response of the normal correlator output and the null output of the orthogonal correlator, with identical inputs of 1 volt peak to peak. The gain of the normal correlator is approximately 5 at the center frequency. The orthogonal correlator frequency response is −6 db at the low end (34 khz) and −3 db at the high end (109 khz), as shown in Fig. 8. The ratio of the output to null voltage at the center frequency is equal to 70:1 for the tests shown. Dynamic range and linearity of the multiplier are shown in Fig. 9. The gain of the orthogonal multiplier is 2.5.

ANALYZER

The parallax and distortion analyzers are similar circuits. Fig. 10 shows the typical dynamic range and linearity. Inputs are a 1-khz sine wave and an 8-khz square wave. The output is a modulated 8-khz carrier, with characteristics as shown. In this case, the gains of the two circuits tested differ considerably, indicating the need for normalization on the production units. The null with zero sine-wave input is generally much less than 25 millivolts peak to peak for all units tested.

MODULATOR

The modulator (Fig. 11) was tested for linearity, dynamic range, and gain stability. Linearity is excellent over the ±5-volt control range. The gain, at 25 °C, was 0.40, i.e., a 1-dc input gave 0.40-volt peak to peak output. Gain decreased with increasing temperature, with a typical change of 0.2 percent per °F change of ambient.

Fig. 12a is a photograph of the output waveforms with +5 volts applied to the control input. Fig. 12b shows the null output (0 volts in) to be less than 5 millivolts peak to peak.

The frequency response of the modulator is indicated by the waveforms of the square-wave response (Fig. 13). The rise time of the leading and trailing edges is approximately 0.15 microsecond.

Table 1 — Breadboard Components

Component	Quantity
Time base oscillator	
Micrologic circuits FD 950	2
Micrologic circuits, Fairchild, μLA 750	1
Transistors, 2N3643	2
Potentiometer, 1 kilohm	1
Resistors, 1/4 watt	12
Capacitors, 5 at 50 vdc	2
Capacitors, 0.0047 millifarad	1
Capacitors, 22 picofarad	1
Diodes, 1N753	1
Fairchild, FμA 710	1
Transistors, 2N4091	1
Capacitor, 0.015 microfarad	1
Capacitor, 3.3 millifarad 15 vdc	2
Resistors, 1/4 watt	8
Deflection amplifier	
Micrologic circuits MC1530	1
Transistors, 2N3643	4
Transistors, 2N3644	2
Diodes, FD6193	2
Diodes, 1N4729, 3.6 volts, 1 watt	2
Capacitors, 360 picofarad	1
Capacitors, 150 picofarad	1
Capacitors, 0.015 millifarad	1
Capacitors, 3.3 millifarad, 15 vdc	2
Resistors, 1/4 watt	20
Experimental deflection amplifier	
Analog devices, number 116 amplifier	1
Resistors, 1/4 watt	4
Capacitor	1

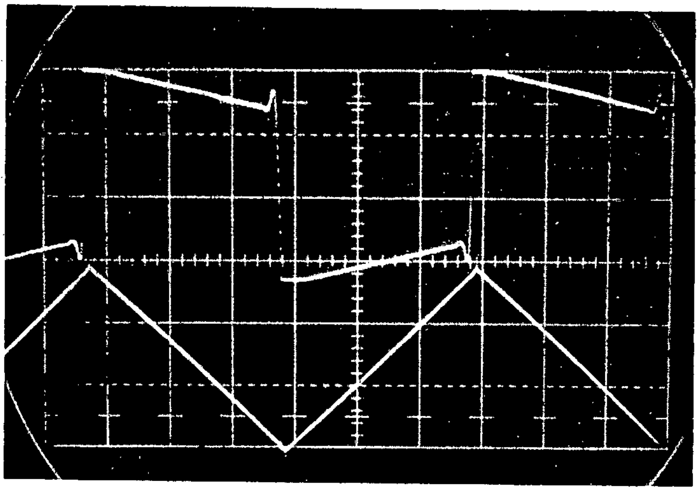

Fig. 1 — Deflection coil voltage, 5 volts per centimeter (deflection current = 50 milliamperes per centimeter, sweep = 20 microseconds per centimeter)

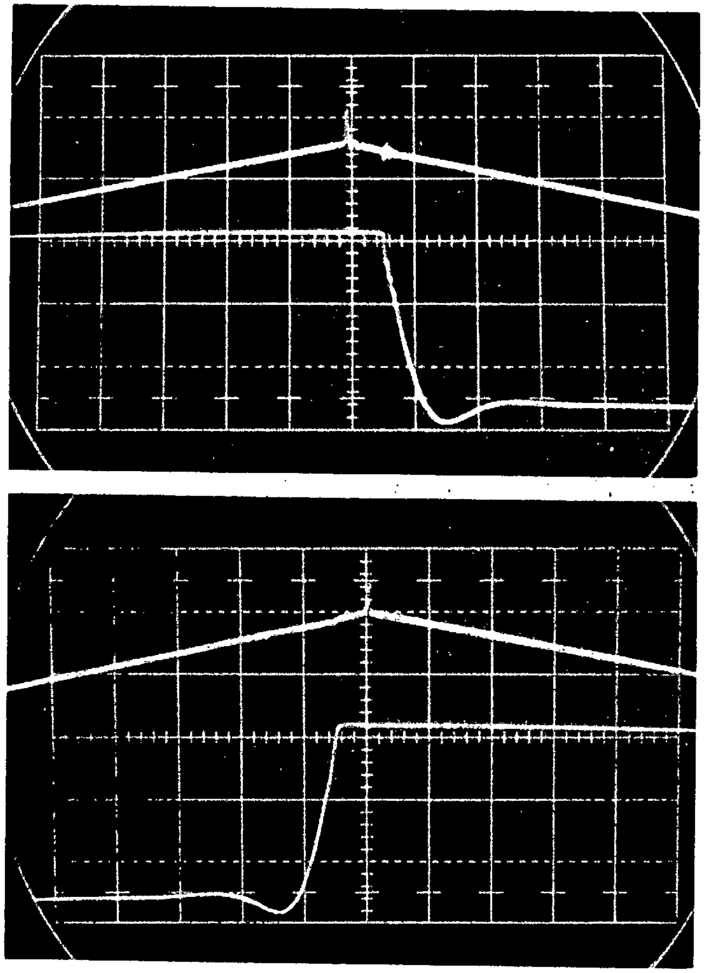

Fig. 2 — Turnaround region, expanded time scale (voltage = 5 volts per centimeter, current = 25 milliamperes per centimeter, sweep = 2 microseconds per centimeter)

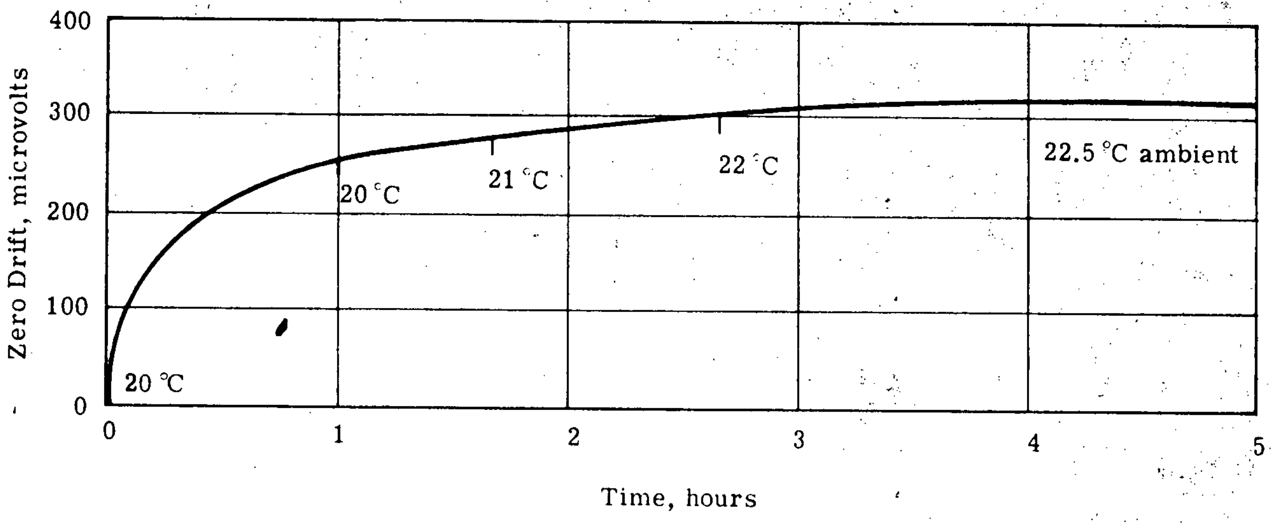

Fig. 3 — Deflection amplifier stability

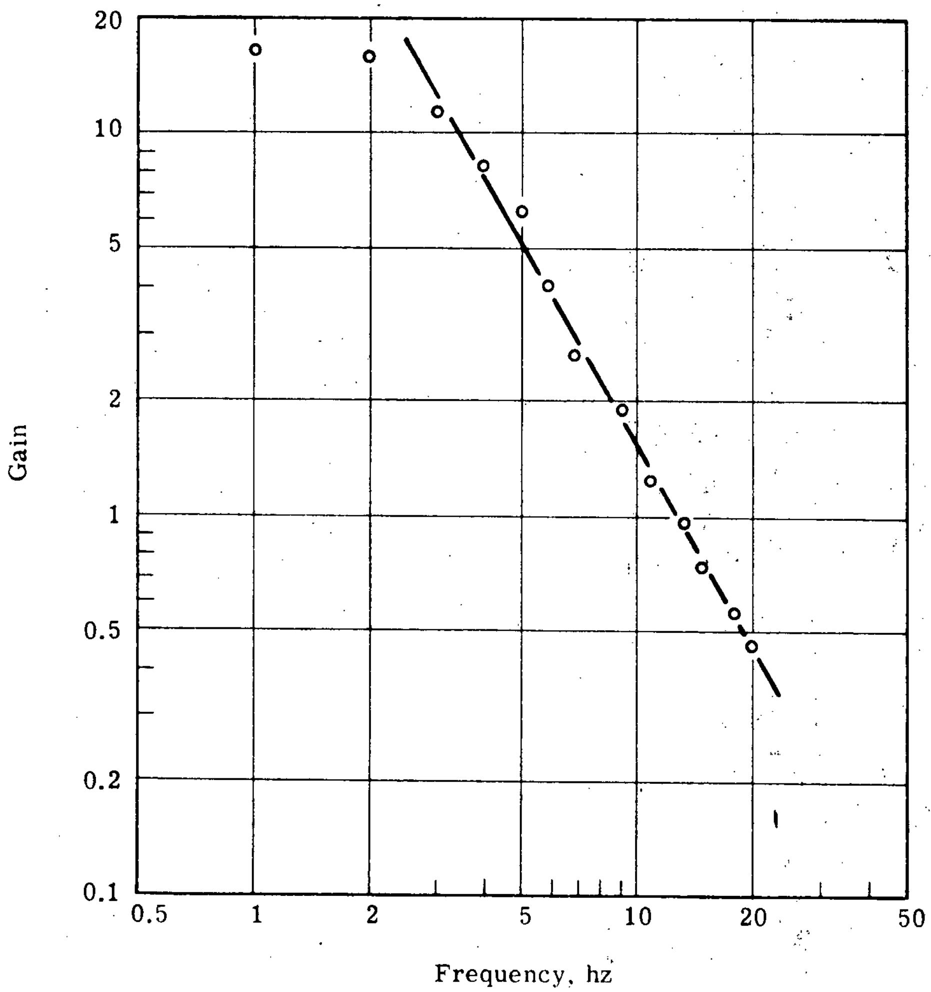

Fig. 4 — Open loop response, phase lock loop

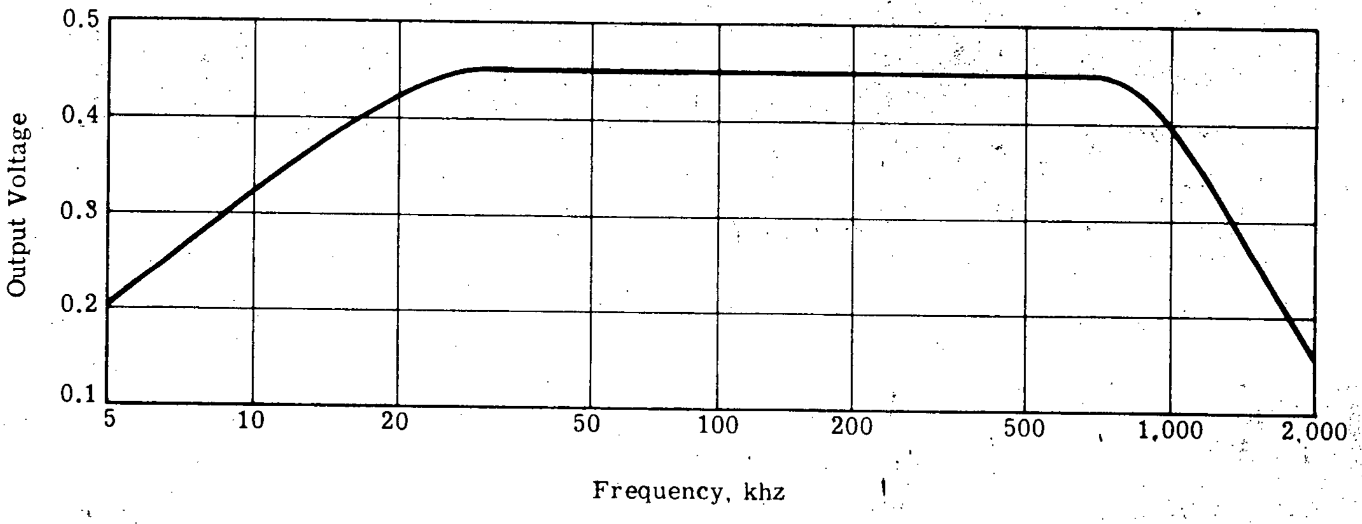

Fig. 5 — Video amplifier frequency response, 2-millivolt input

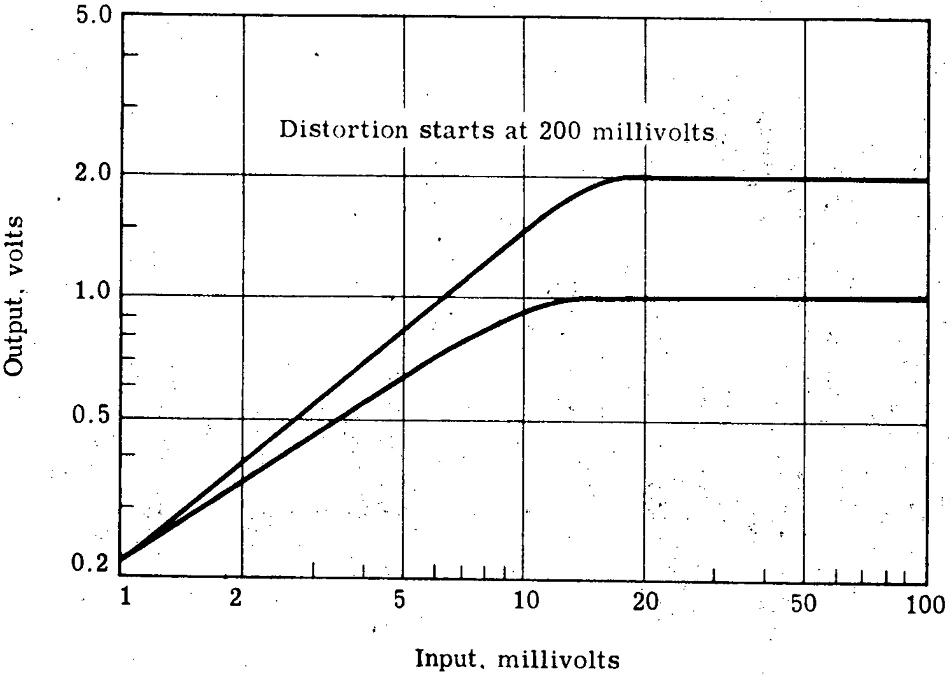

Fig. 6 — Automatic gain control range

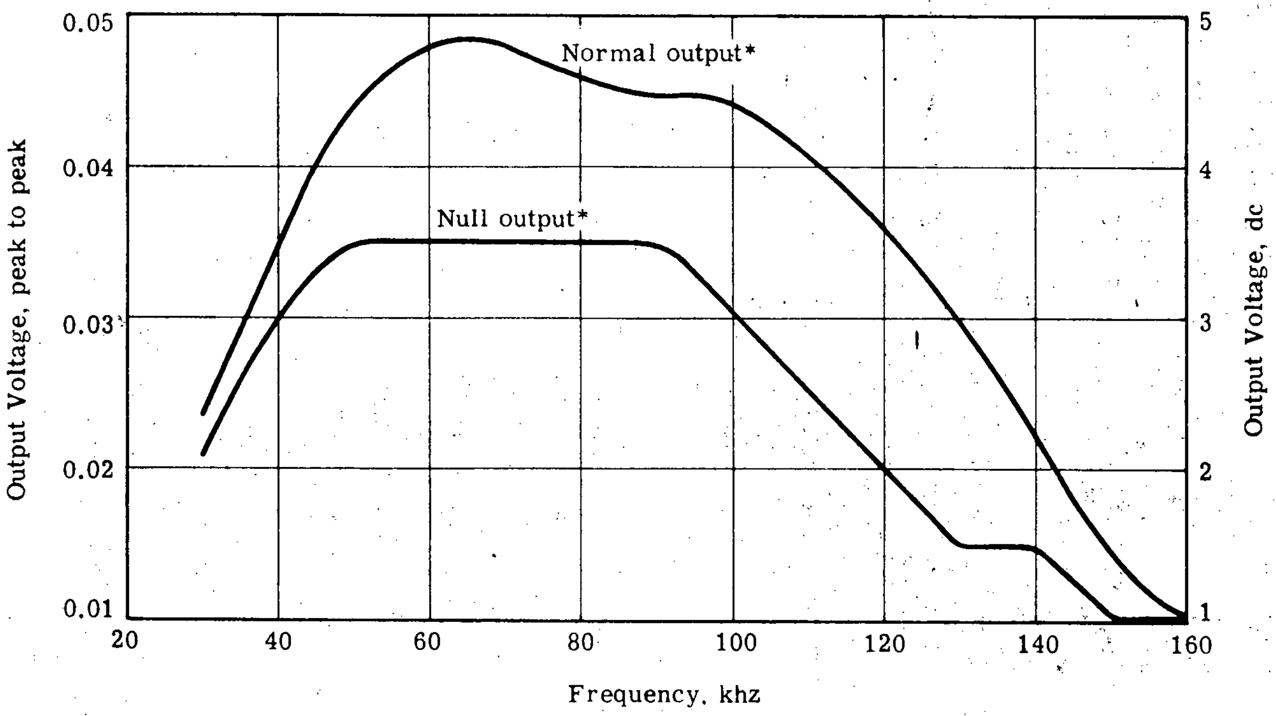

* Outputs and inputs joined at 1 volt peak to peak.

Fig. 7 — Correlator A frequency versus orthogonal and normal outputs

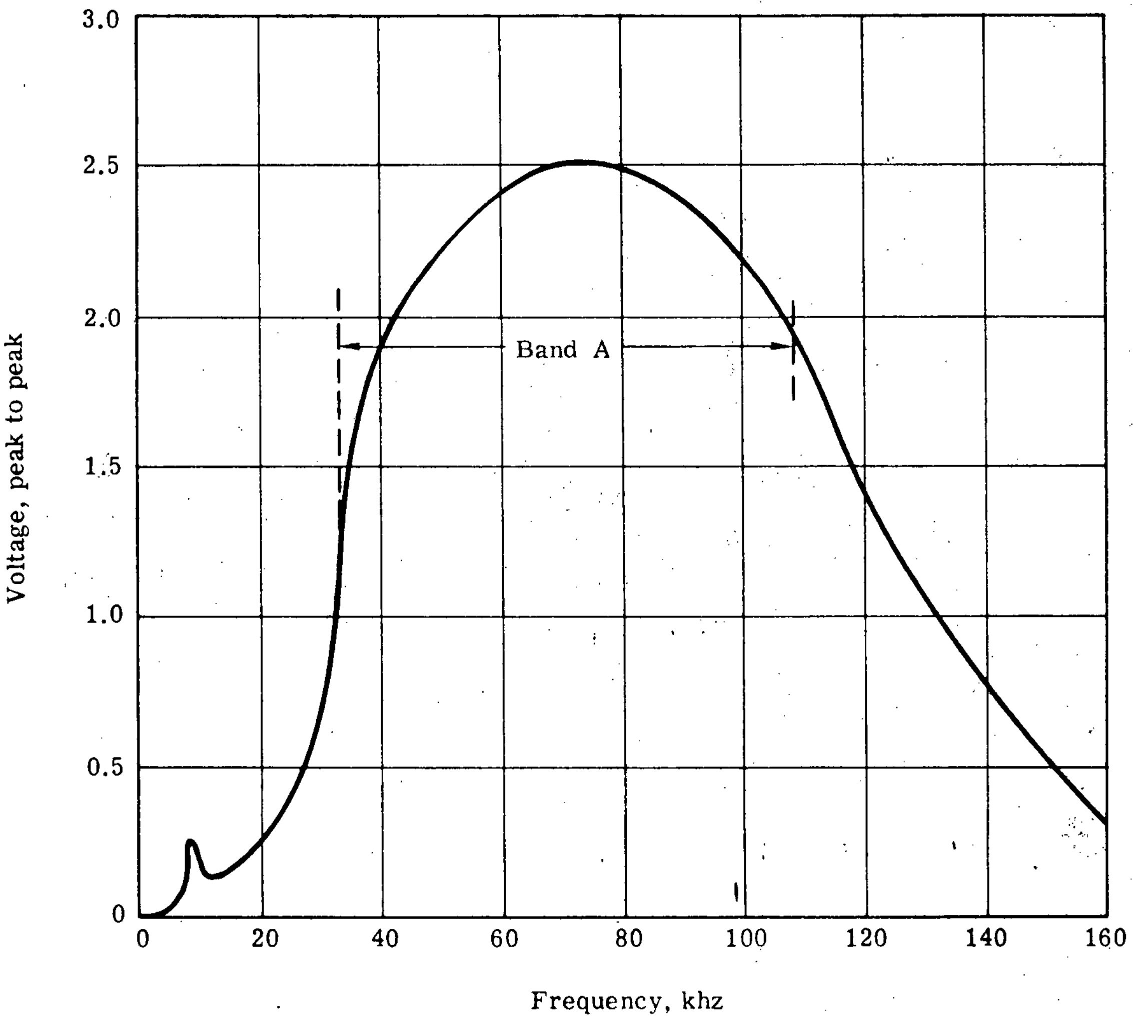

Fig. 8 — Correlator A frequency versus orthogonal output

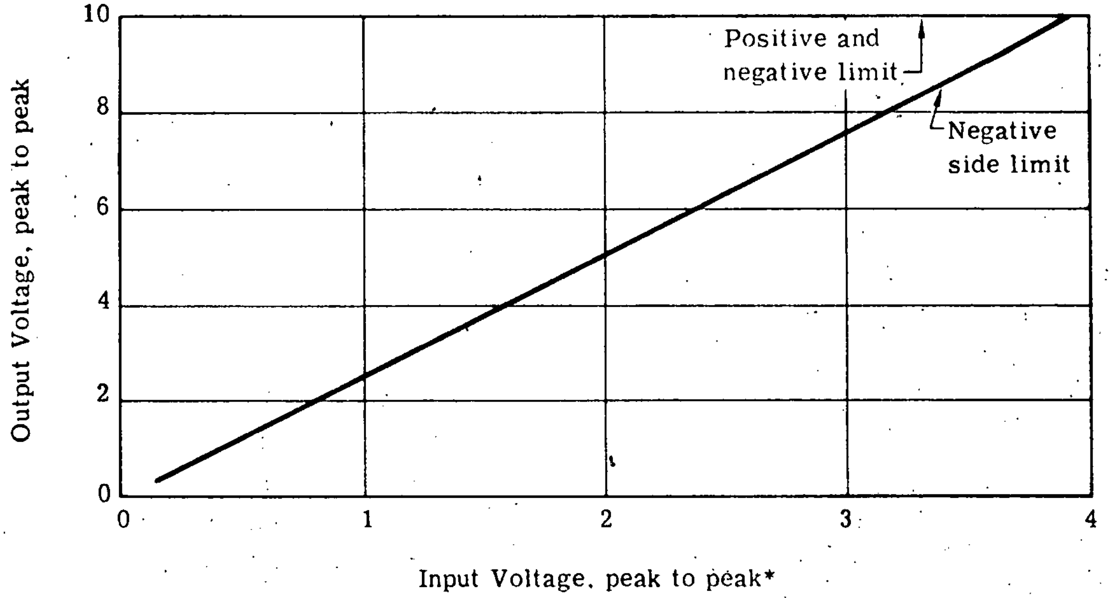

* Right input varied; left input constant at 1 volt peak to peak.

Fig. 9 — Correlator A dynamic range, 64-khz input, 60-hz-beat output

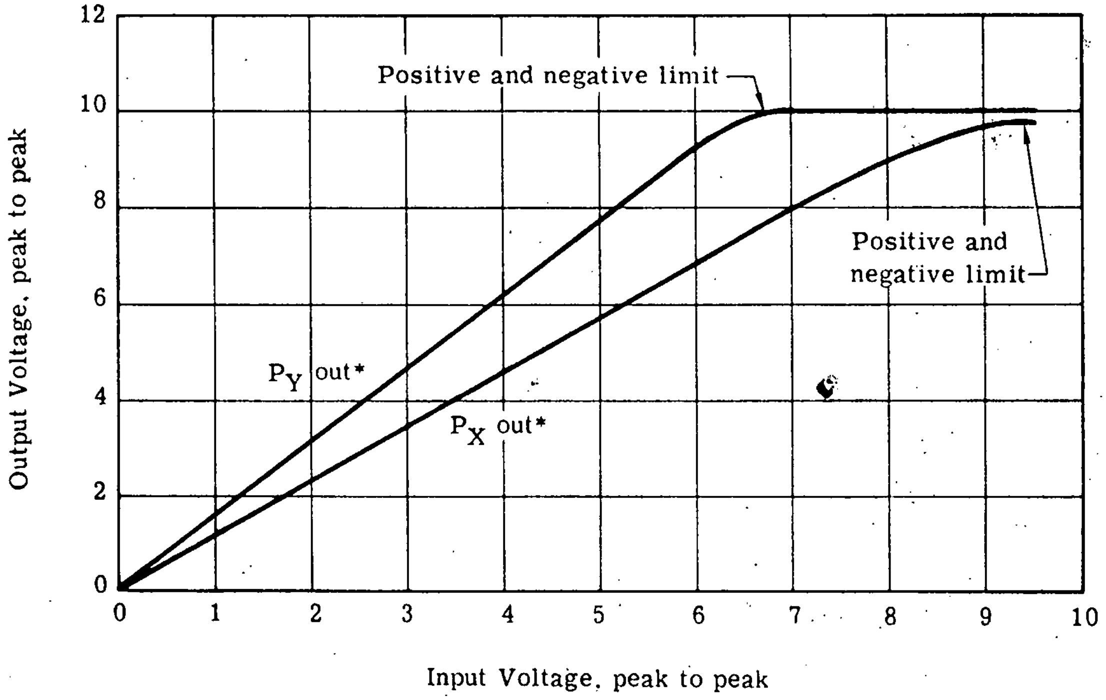

* P_X and P_Y common inputs = 1 khz.

Fig. 10 — Distortion analyzer dynamic range

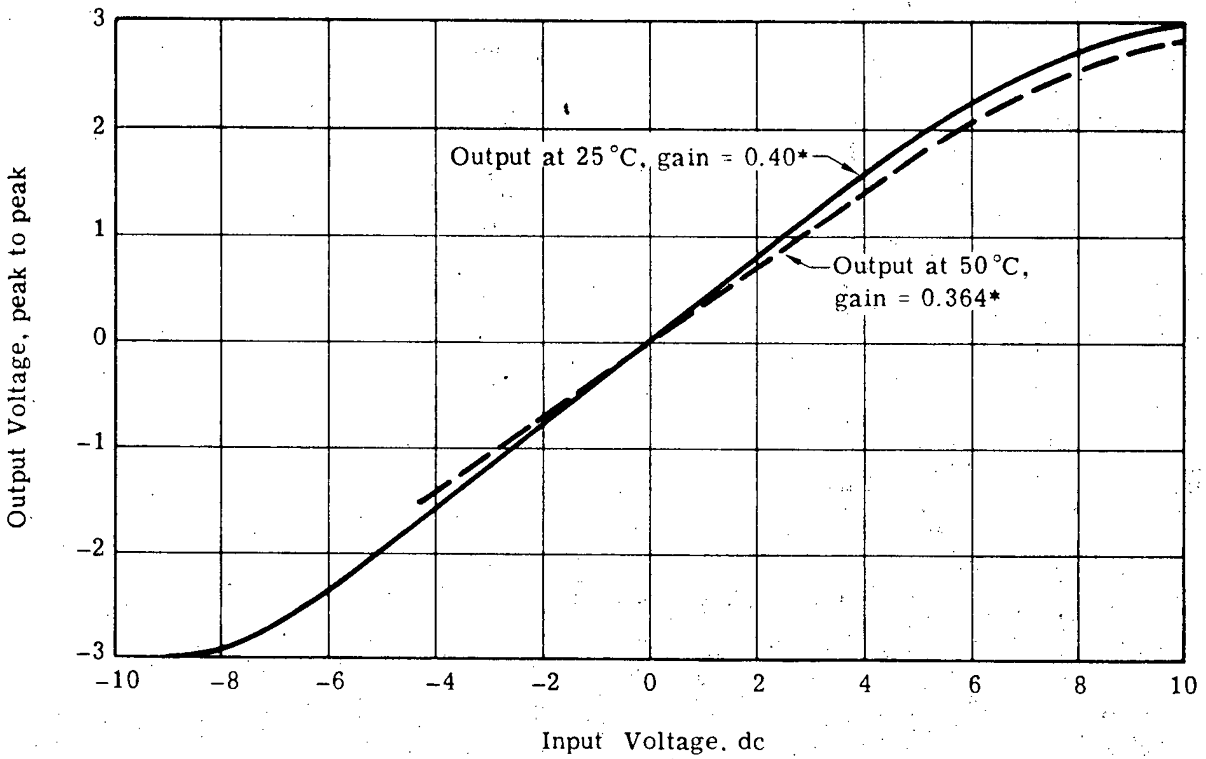

*Change in gain = 0.2 percent per °C.

Fig. 11 — Modulator tests

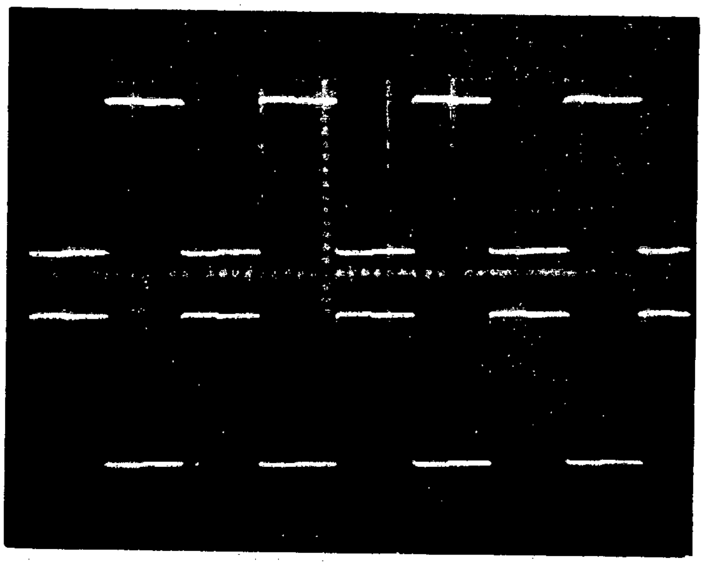

(a) Input 5 vdc, 1 volt, 50 microseconds per division

(b) Input 0 vdc, 5 millivolts, 50 microseconds per division

Fig. 12 — Modulator tests

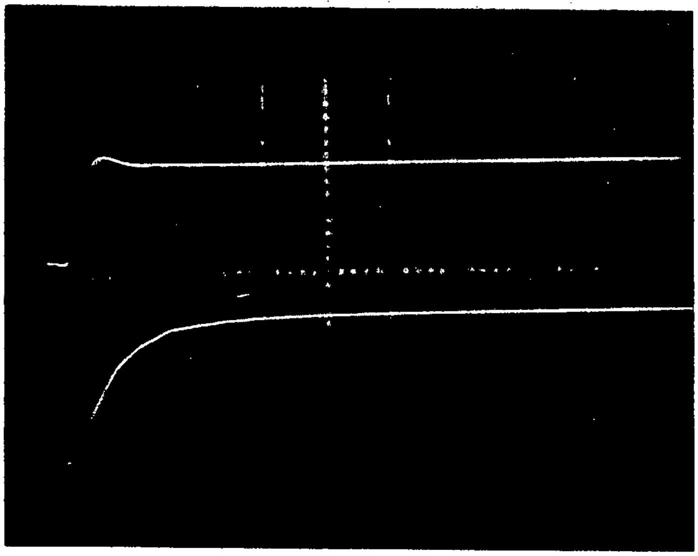

(a) Leading edge, 1 volt, 0.1 microsecond per division

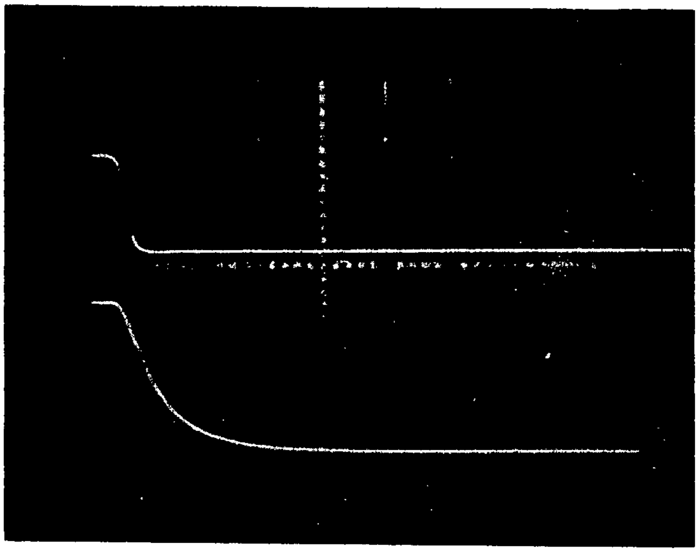

(b) Trailing edge, 1 volt, 0.1 microsecond per division

Fig. 13 — Modulator tests

APPENDIX T34-A

UTILITIES MECHANICAL SCHEMATIC

DRAWING E-6296

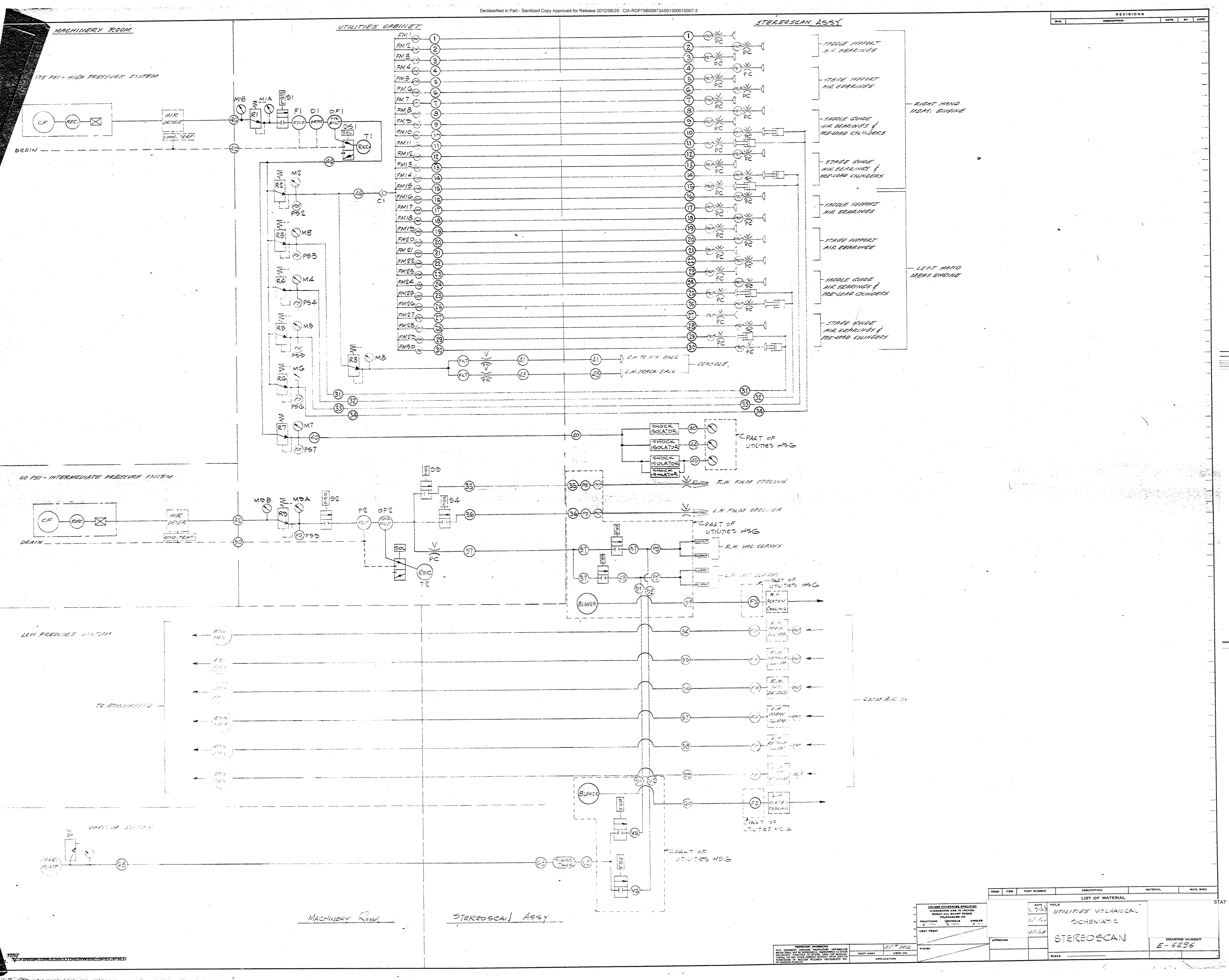

NOTES: 1. ~~125 √ FINISH UNLESS OTHERWISE SPECIFIED~~

REQD	ITEM	PART NUMBER	DESCRIPTION	MATERIAL	MATL SPEC

LIST OF MATERIAL

PROPRIETARY INFORMATION
THIS DOCUMENT CONTAINS PROPRIETARY INFORMATION WHICH SHALL NOT BE REPRODUCED, TRANSFERRED TO OTHER DOCUMENTS, DISCLOSED TO OTHERS, USED FOR MANUFACTURING, OR ANY OTHER PURPOSE WITHOUT PRIOR WRITTEN PERMISSION OF NUCLEAR RESEARCH INSTRUMENTS DIV. OF HOUSTON FEARLESS.

NEXT ASSY	USED ON
	J.C.# 302
APPLICATION	

UNLESS OTHERWISE SPECIFIED
DIMENSIONS ARE IN INCHES.
BREAK ALL SHARP EDGES.
TOLERANCES ON
FRACTIONS ± DECIMALS ± ANGLES ±
HEAT TREAT
FINISH

[redacted]

DATE
2-5-68
2/1/68
2/1/68
APPROVED

TITLE
UTILITIES MECHANICAL
SCHEMATIC
STEREOSCAN

[redacted]

STAT

DRAWING NUMBER
E-6296
SCALE

APPENDIX T34-B

TUBING ASSEMBLY - UTILITIES MECHANICAL ASSEMBLY

DRAWING E-5808

REVISIONS				
SYM	DESCRIPTION	DATE	BY	APPD

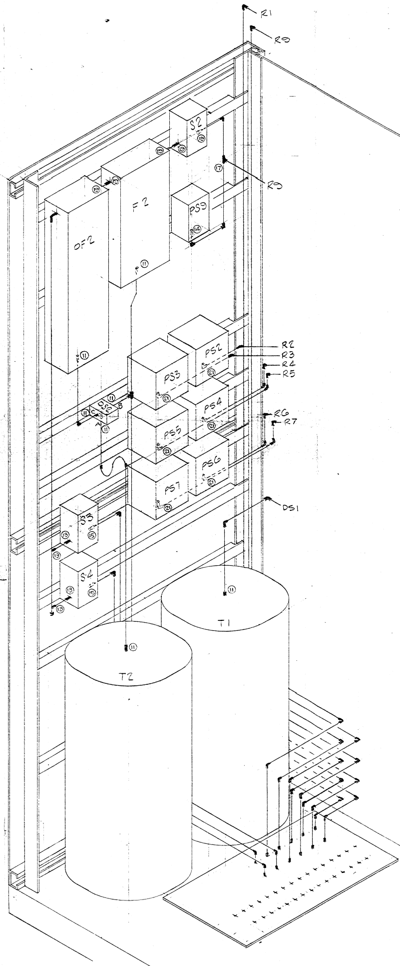

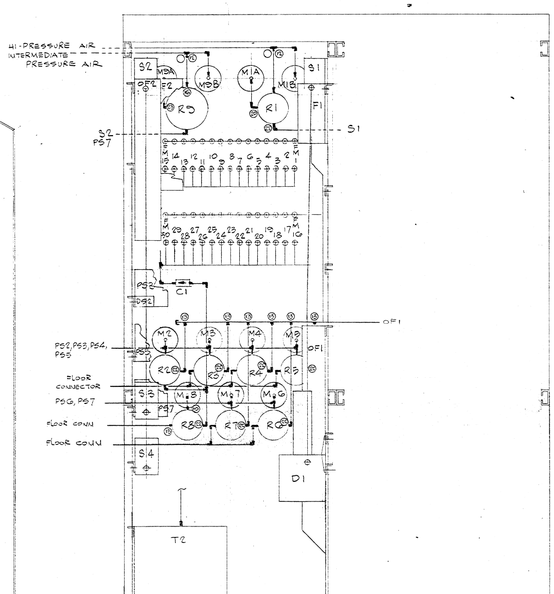

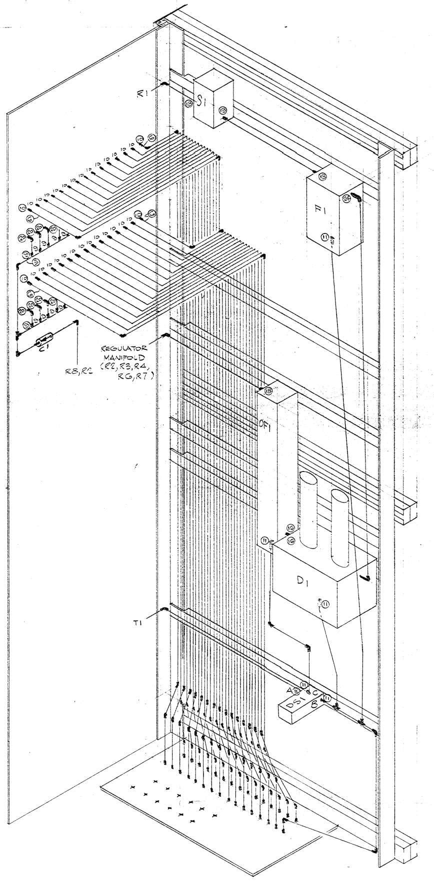

NOTES 1. $\sqrt{125}$ FINISH UNLESS OTHERWISE SPECIFIED

REQD	ITEM	PART NUMBER	DESCRIPTION	MATERIAL	MATL SPEC

LIST OF MATERIAL

UNLESS OTHERWISE SPECIFIED
DIMENSIONS ARE IN INCHES.
BREAK ALL SHARP EDGES.
TOLERANCES ON
FRACTIONS ± — DECIMALS ± — ANGLES ± —
HEAT TREAT —
FINISH —

	DATE	TITLE
	14 DEC 67	TUBING ASSY UTILITIES MECH ASSY STEREOSCAN
CHECK		
ENGR		
APPROVED		

SCALE 1/4

DRAWING NUMBER SK 5808

E5810	J.0.302
NEXT ASSY	USED ON
APPLICATION	

PROPRIETARY INFORMATION
THIS DOCUMENT CONTAINS PROPRIETARY INFORMATION WHICH SHALL NOT BE REPRODUCED, TRANSFERRED TO OTHER DOCUMENTS, DISCLOSED TO OTHERS, USED FOR MANUFACTURING, OR ANY OTHER PURPOSE WITHOUT PRIOR WRITTEN PERMISSION OF NUCLEAR RESEARCH INSTRUMENTS DIV OF HOUSTON FEARLESS.

STAT

FORM NO. 144A

APPENDIX T34-C

ELECTRICAL DIAGRAM OF UTILITIES CONTROL

SK-405

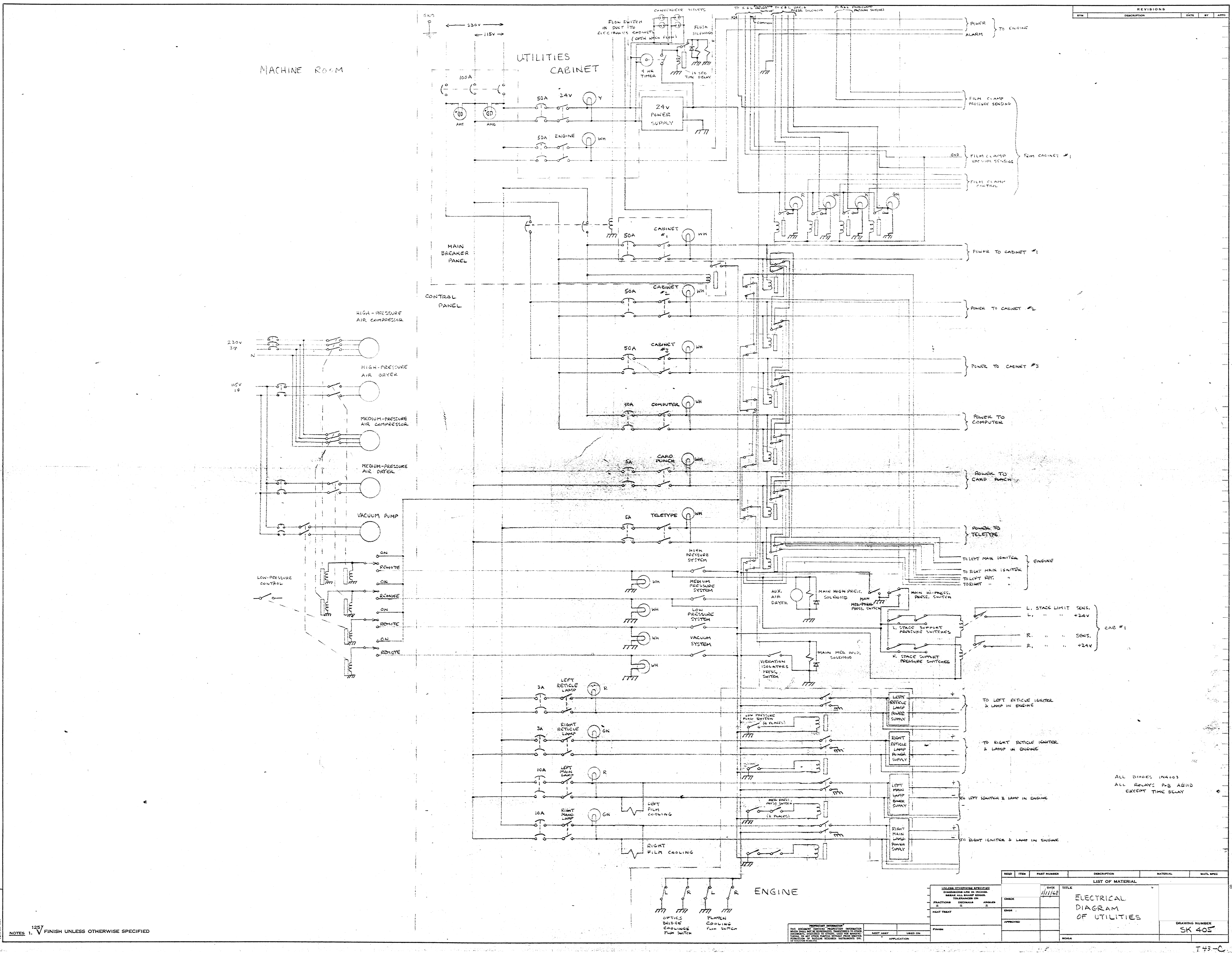

ALL DIODES 1N4003
ALL RELAYS P-B AB11D
EXCEPT TIME DELAY

REQD	ITEM	PART NUMBER	DESCRIPTION	MATERIAL	MATL SPEC

LIST OF MATERIAL

UNLESS OTHERWISE SPECIFIED
DIMENSIONS ARE IN INCHES.
BREAK ALL SHARP EDGES.
TOLERANCES ON
FRACTIONS ± DECIMALS ± ANGLES ±

HEAT TREAT

FINISH

PROPRIETARY INFORMATION
THIS DOCUMENT CONTAINS PROPRIETARY INFORMATION WHICH SHALL NOT BE REPRODUCED, TRANSFERRED TO OTHER DOCUMENTS, DISCLOSED TO OTHERS, USED FOR MANUFACTURING, OR ANY OTHER PURPOSE WITHOUT PRIOR WRITTEN PERMISSION OF NUCLEAR RESEARCH INSTRUMENTS DIV. OF HOUSTON FEARLESS

NEXT ASSY
USED ON
APPLICATION

DATE 1/11/68
CHECK
ENGR
APPROVED

TITLE
ELECTRICAL DIAGRAM OF UTILITIES

DRAWING NUMBER
SK 405

SCALE

STAT

NOTES 1. 1257 √ FINISH UNLESS OTHERWISE SPECIFIED

T43-C

APPENDIX T34-D

CONTROL PANEL SCHEMATIC

DRAWING D-6596

REVISIONS				
SYM	DESCRIPTION	DATE	BY	APPD

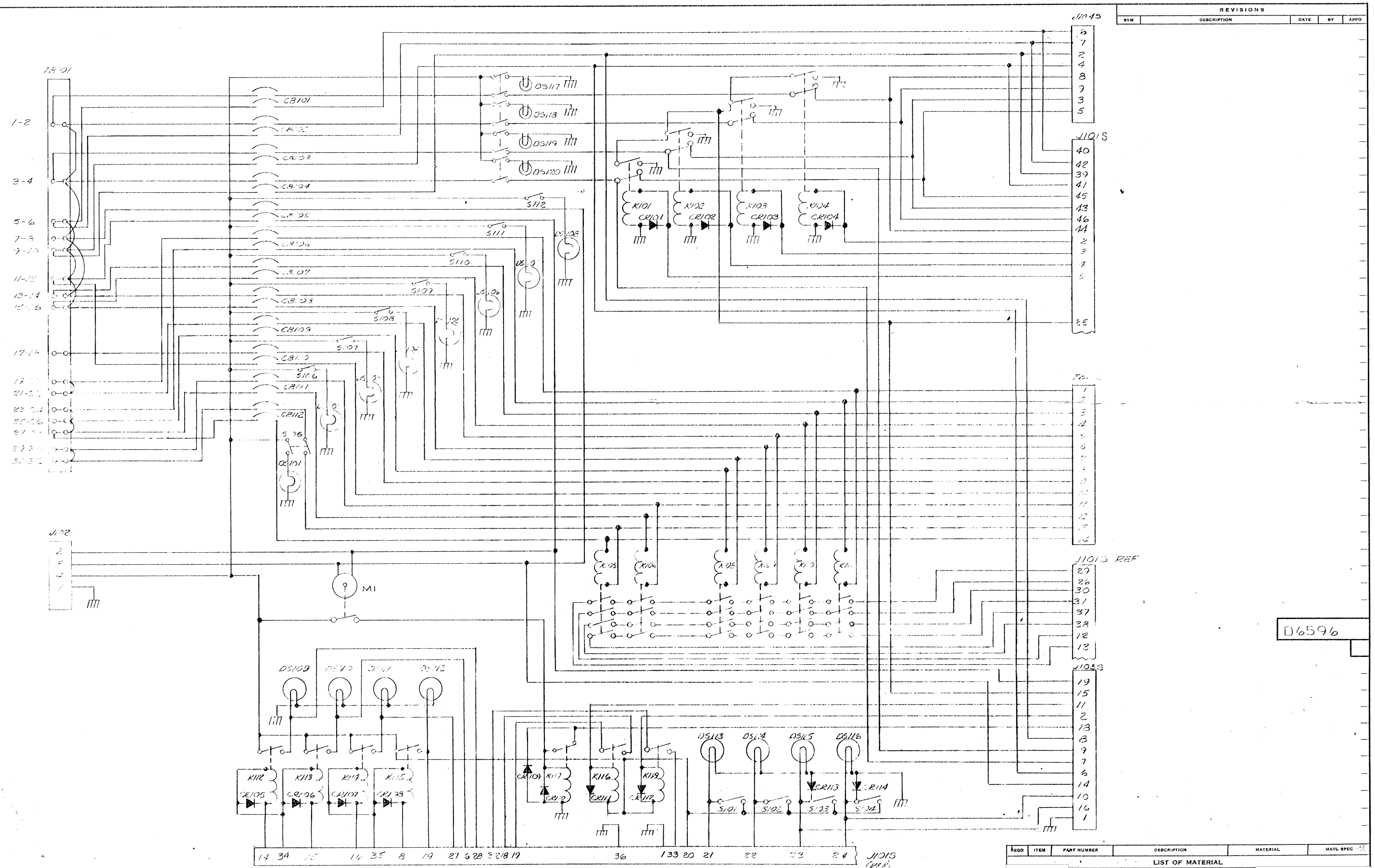

D6596

STAT

1.) ALL DIODES IN4003

NOTES ~~1. 125/√ FINISH UNLESS OTHERWISE SPECIFIED~~

FORM NO. 163A

REQD	ITEM	PART NUMBER	DESCRIPTION	MATERIAL	MATL SPEC

LIST OF MATERIAL

UNLESS OTHERWISE SPECIFIED
DIMENSIONS ARE IN INCHES.
BREAK ALL SHARP EDGES.
TOLERANCES ON
FRACTIONS ± DECIMALS ± ANGLES ±

HEAT TREAT

FINISH

[redacted]

DATE
1-3-68
1-30-68
1-30-68
1/30/68

TITLE
CONTROL PANEL SCHEM.
UTILITIES CABINET
STEREOSCAN

[redacted]

DRAWING NUMBER
D6596

SCALE NONE

PROPRIETARY INFORMATION
THIS DOCUMENT CONTAINS PROPRIETARY INFORMATION WHICH SHALL NOT BE REPRODUCED, TRANSFERRED TO OTHER DOCUMENTS, DISCLOSED TO OTHERS, USED FOR MANUFACTURING, OR ANY OTHER PURPOSE WITHOUT PRIOR WRITTEN PERMISSION OF NUCLEAR RESEARCH INSTRUMENTS DIV. OF HOUSTON FEARLESS.

(E6530)	J.O. 302
NEXT ASSY	USED ON
APPLICATION	

APPENDIX T35-A

DYNAMIC ANALYSIS [redacted] STAT

9001147 ISOLATION SYSTEM

[redacted]

DYNAMIC ANALYSIS
of
[redacted] 9001147 ISOLATION SYSTEM
for
[redacted] Stero Comparator

WD-495

December 28, 1967

Submitted to:

[redacted]

[redacted]

[redacted] Report No. WD-495

STAT

TABLE OF CONTENTS

1.0 SCOPE

The purpose of this report is to analyze the response of [redacted] [redacted] stero comparator when mounted on [redacted] 9001147 Isolation System and subjected to the vibration inputs per [redacted] [redacted] Report No. 1398.

STAT
STAT
STAT
STAT

2.0 SIGN CONVENTION

2.1 The location and orientation of inertial referance axis for which all location dimensions are referenced, is as shown in Figure I.

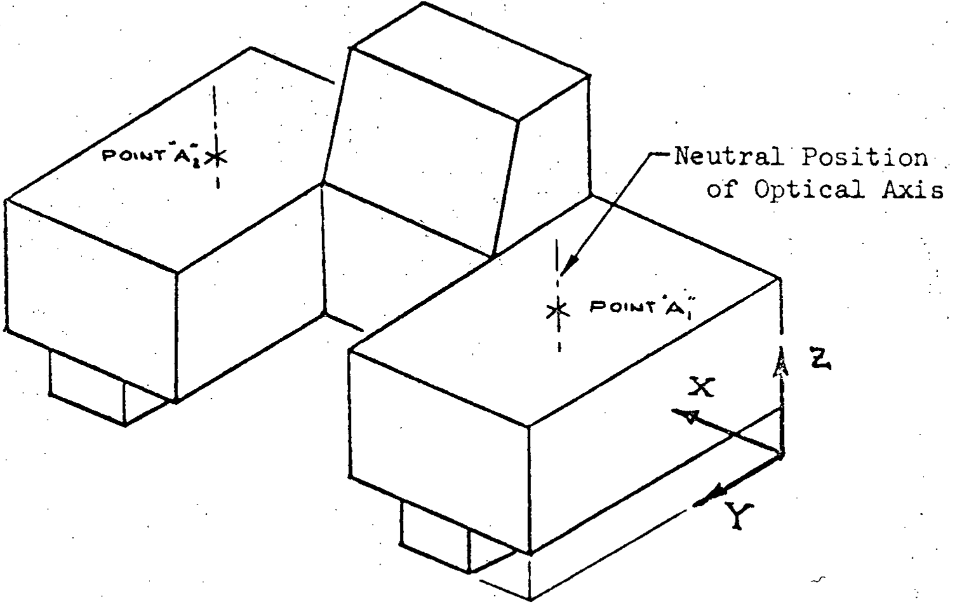

FIGURE 1

STAT

3.0 SUMMARY OF RESULTS

3.1 Weight

W = 26,344 lbs.

3.2 Location of C.G.

$\bar{X}$	$\bar{Y}$	$\bar{Z}$
6.10 Ft	3.08 Ft	2.49 Ft

3.3 Principle Moments of Inertia

I_{xx}	I_{yy}	I_{zz}
3661.9 ft-lb-sec^2	12412 ft-lb-sec^2	13438 ft-lb-sec^2

3.4 Products of Inertia

I_{xy}	I_{xz}	I_{yz}
-2.967 ft-lb-sec^2	-13.71 ft-lb-sec^2	-23.75 ft-lb-sec^2

3.5 Radius of Gyration

ρ_x	ρ_y	ρ_z
2.116 ft.	3.895 ft.	4.053 ft.

3.6 Undamped Natural Frequencies of System

Mode	1	2	3	4	5	6
Natural Freq.	0.687 Hz	.0.504 Hz	1.052 Hz	1.603 Hz	1.296 Hz	0.903 Hz

3.7 Transmissibility -vs- Frequency Curves

3.7.1 Figures 2 - 4 Show the Response at the Systems C.G.

3.7.2 Figures 5 - 7 Show the Response at Optical Axis Point A_1

3.7.3 Figures 8-10 Show the Response at Optical Axis Point A_2

TRANSMISSIBILITY -vs- FREQUENCY PLOT

Location:

System C.G.

Direction:

Vibration Input = X Direction

Vibration Output = X Direction

FIGURE 2

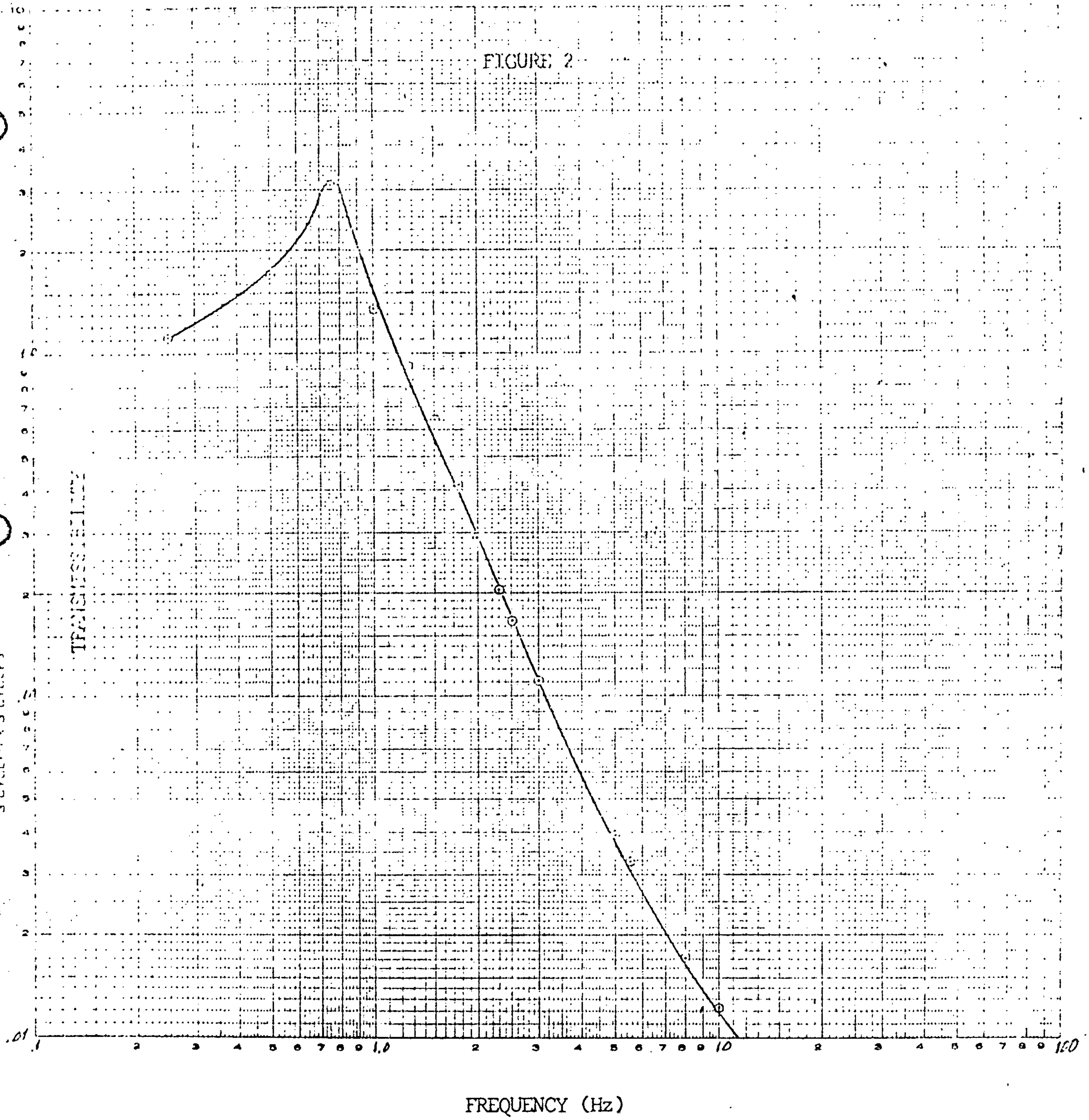

[redacted] Report No. WD-495

Page No. 3

STAT

TRANSMISSIBILITY -vs- FREQUENCY PLOT
Location:
System C.G.
Direction:
Vibration Input = Y Direction
Vibration Output = Y Direction

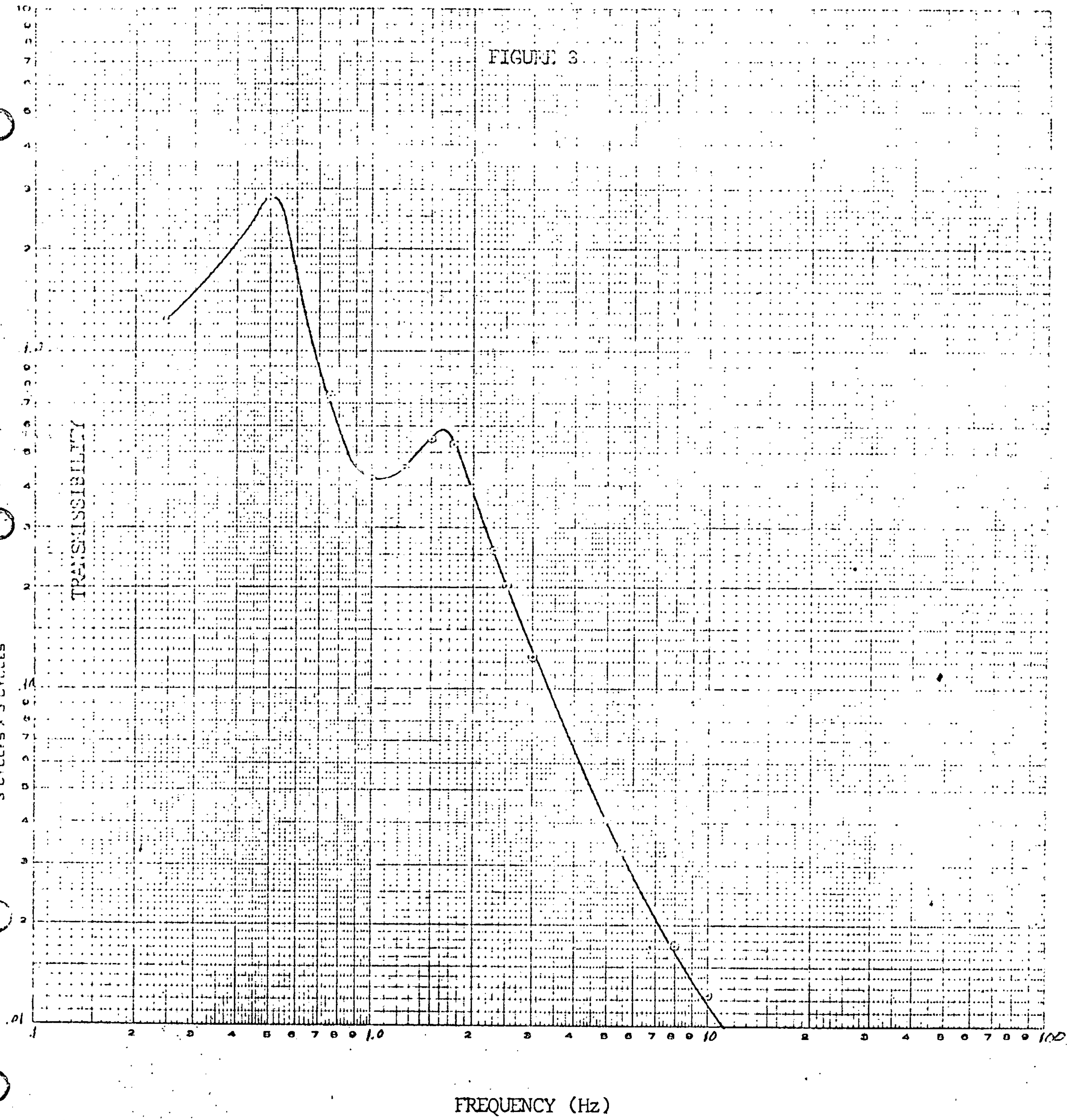
FIGURE 3

TRANSMISSIBILITY -vs- FREQUENCY PLOT

Location:
System C.G.
Direction:
Vibration Input = Z Direction
Vibration Output = Z Direction

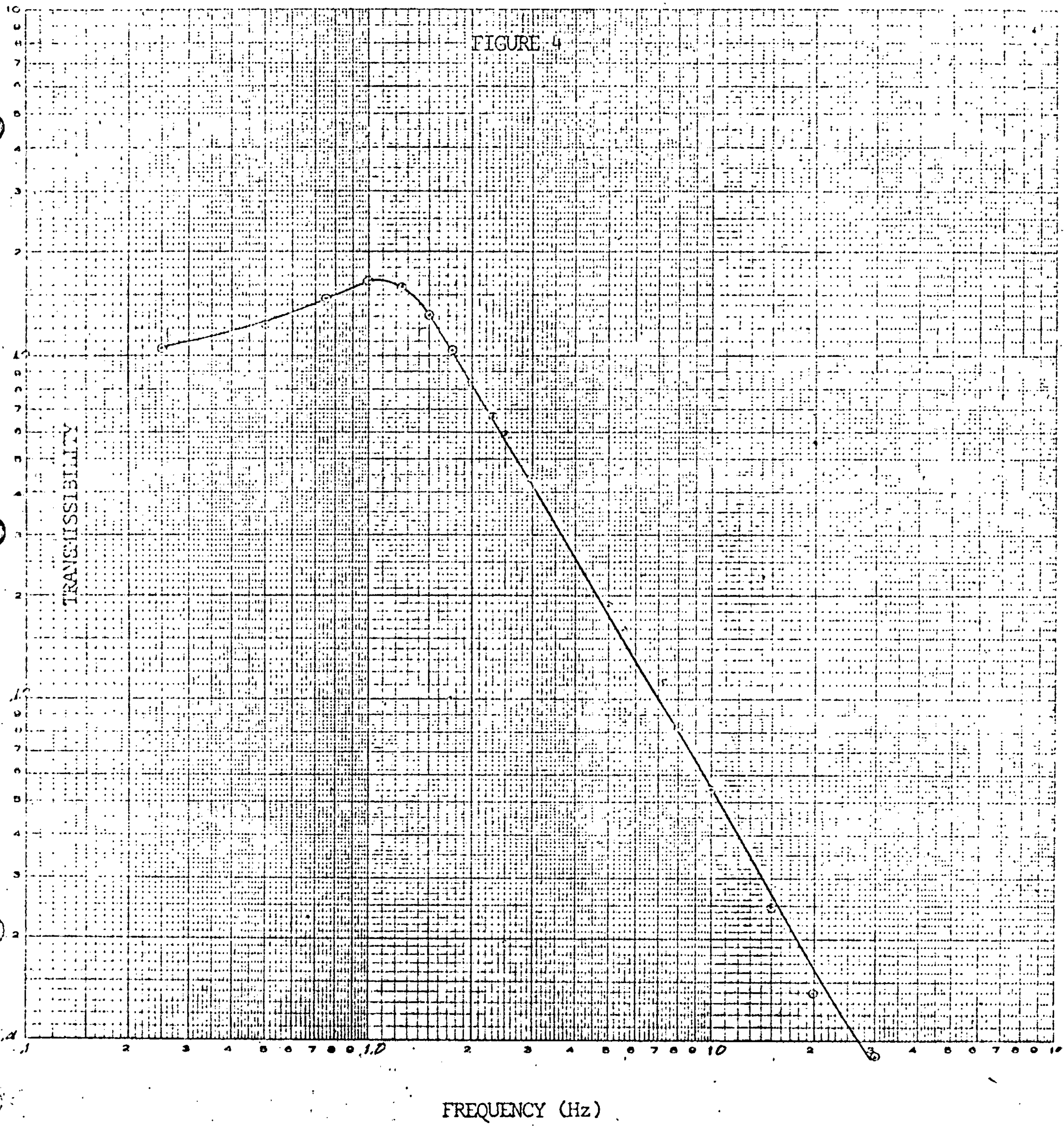
FIGURE 4

TRANSMISSIBILITY -vs- FREQUENCY PLOT

Location:
Neutral Position of Optical Axis (Point A_1)
Direction:
Vibration Input = X Direction
Vibration Output = X Direction

FIGURE 5

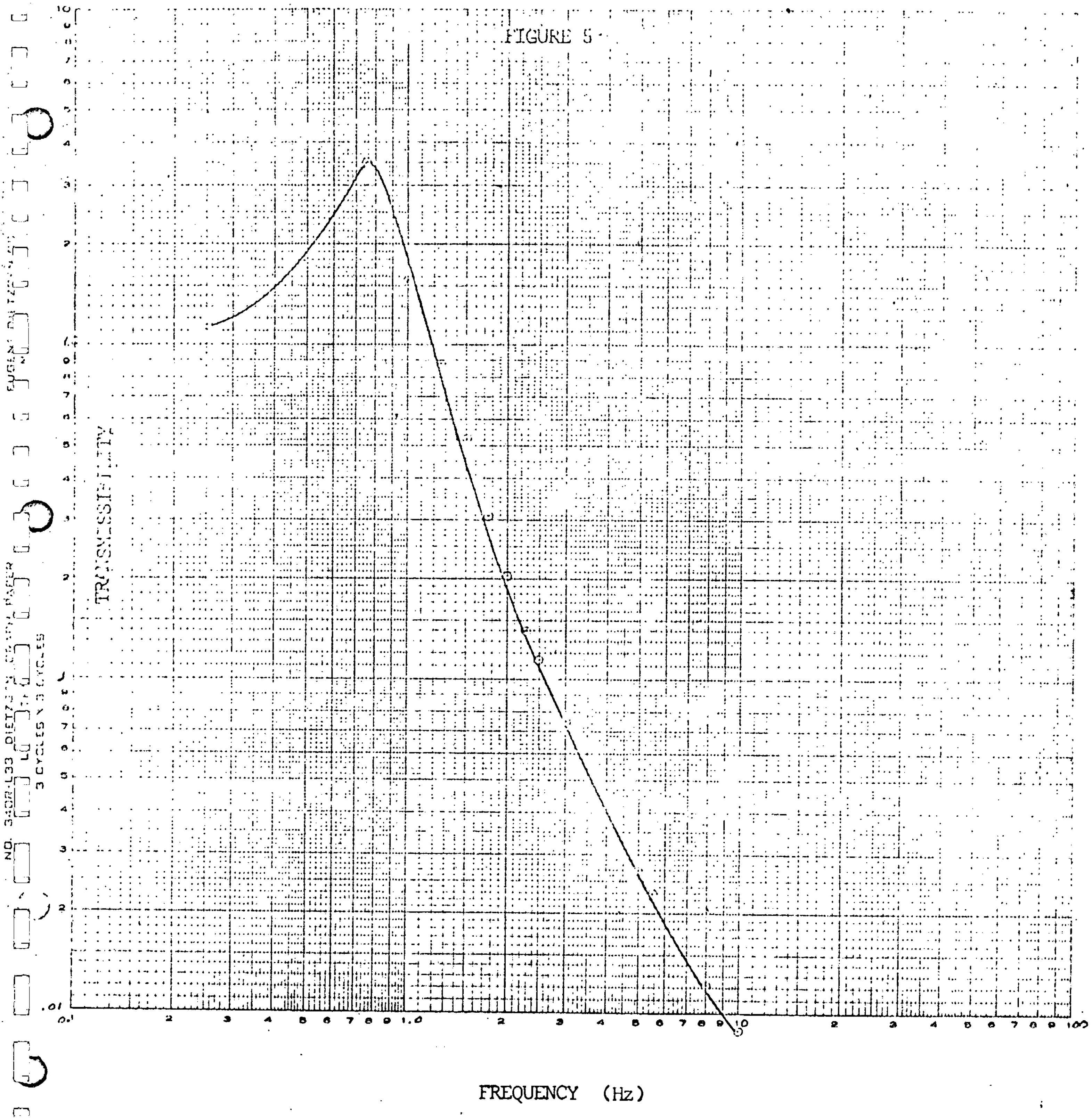

STAT

TRANSMISSIBILITY -vs- FREQUENCY PLOT

Location:

Neutral Position of Optical Axis (Point A_1)

Direction:

Vibration Input = Y Direction

Vibration Output = Y Direction

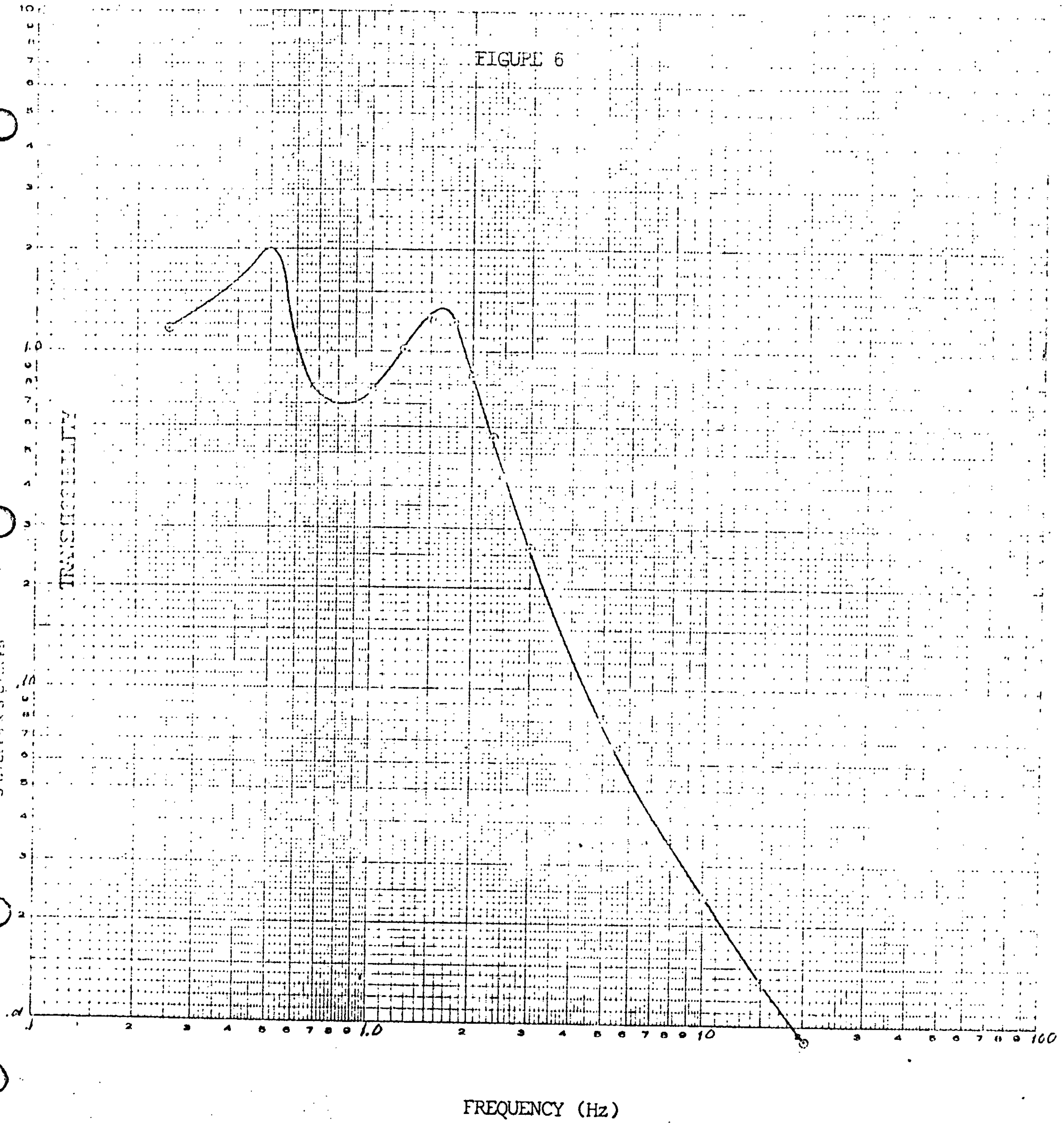

FIGURE 6

[redacted]

STAT

Report No. WD-495

TRANSMISSIBILITY -vs- FREQUENCY PLOT
Location:
Neutral Position of Optical Axis (Point A_1)
Direction:
Vibration Input = Z Direction
Vibration Output = Z Direction

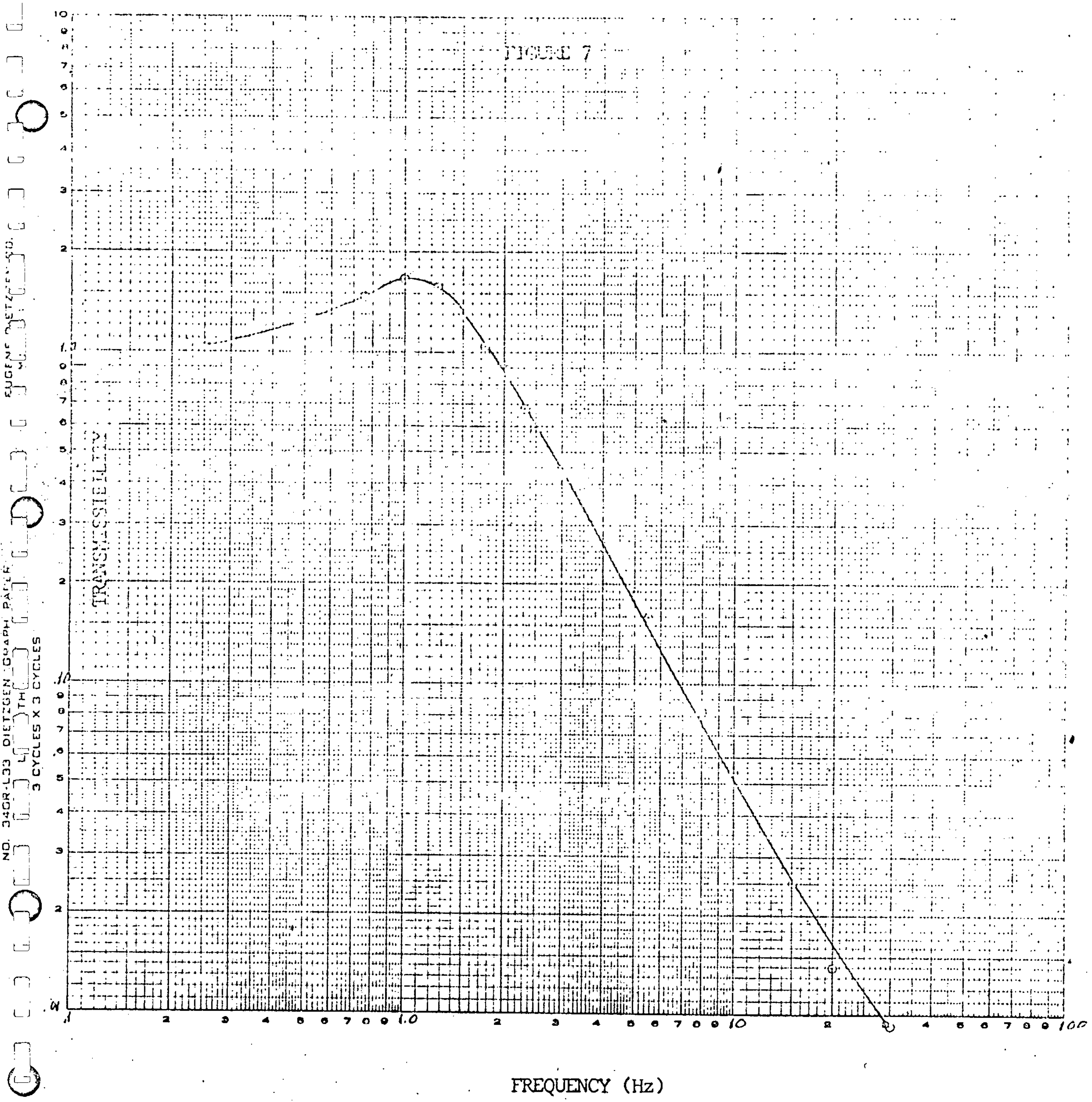

FIGURE 7

[redacted] Report No. WD-495

STAT

TRANSMISSIBILITY -vs- FREQUENCY PLOT

Location:

Neutral Position of Optical Axis (Point A_2)

Direction:

Vibration Input = X Direction

Vibration Output = X Direction

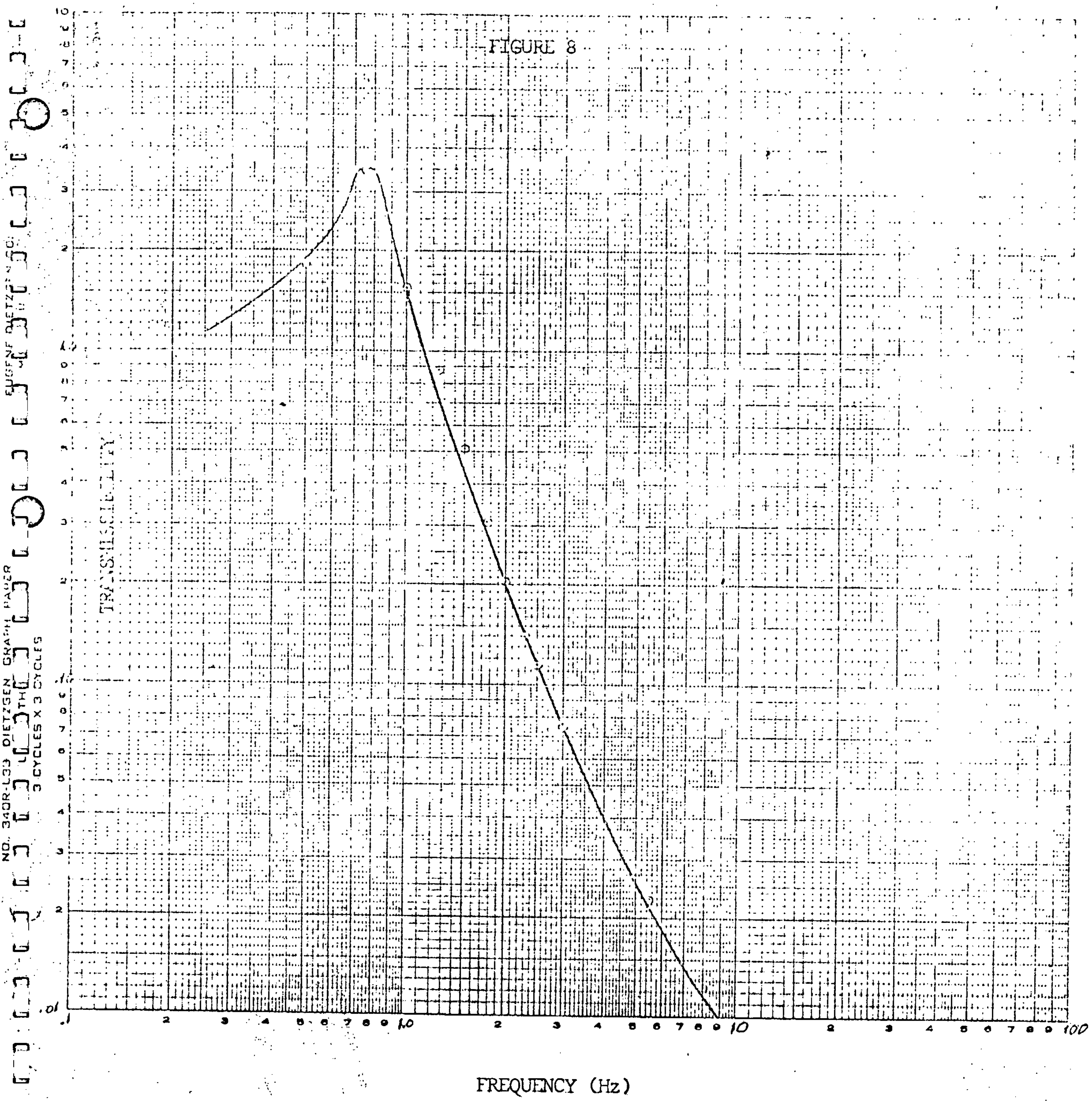
FIGURE 8

STAT

Report No. WD-495

TRANSMISSIBILITY -vs- FREQUENCY PLOT

Location:

Neutral Position of Optical Axis (Point A_2)

Direction:

Vibration Input = Y Direction
Vibration Output = Y Direction

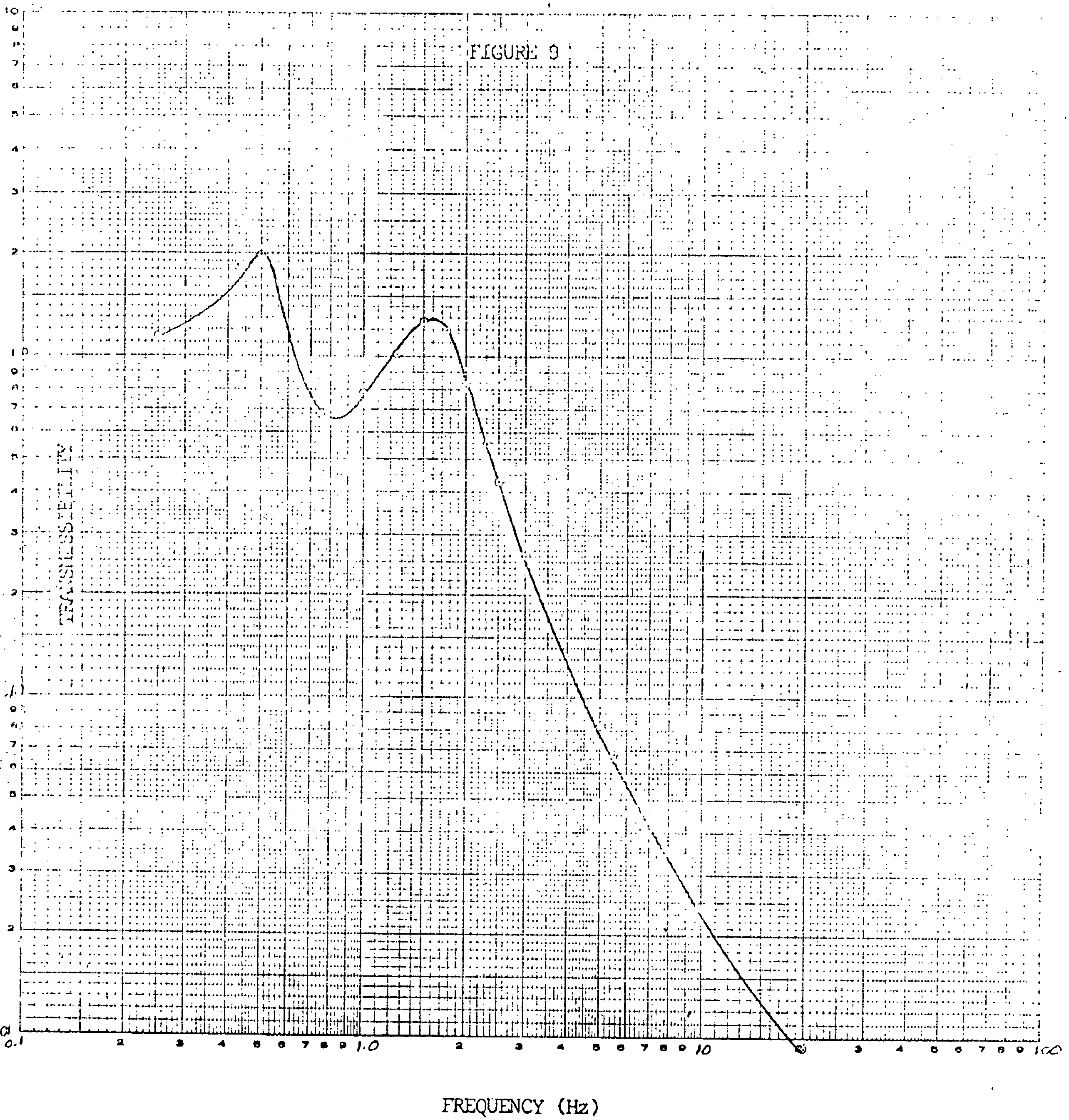

Report No. WD-495

Page No. 10

STAT

TRANSMISSIBILITY -vs- FREQUENCY PLOT
Location:
Neutral Position of Optical Axis (Point A_2)
Direction:
Vibration Input = Z Direction
Vibration Output = Z Direction

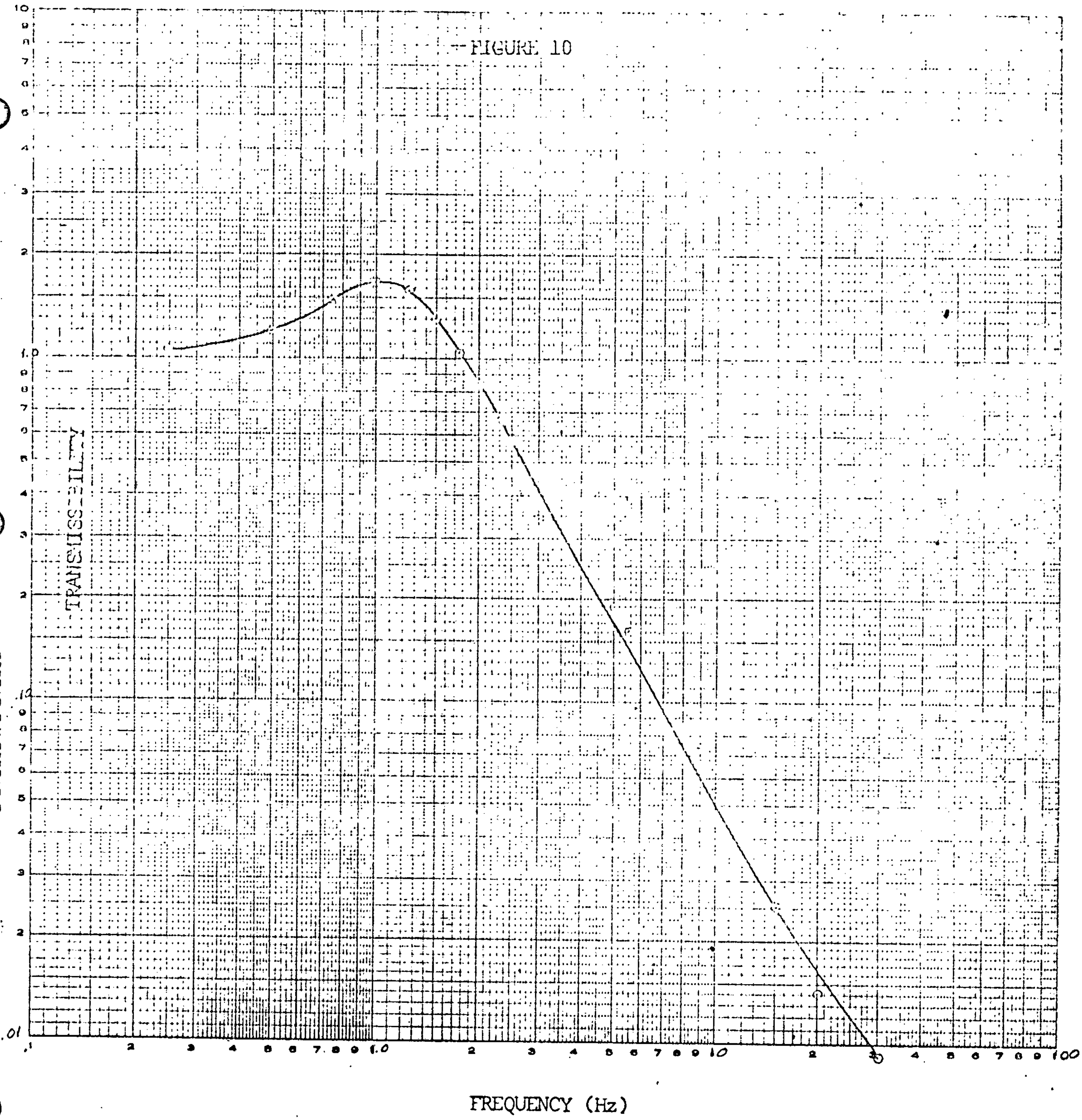
FIGURE 10

[redacted] Report No. WD-495

STAT

Page No. 11

4.0 ANALYSIS

4.1 Weight, Moment & Products of Inertia Calculations

4.1.1 The system was broken into 25 rectangular or triangular sections based on the following drawings as submitted by [redacted] STAT

a) SK 382
b) SK 383
c) SK 384
d) D 1104
e) E 4444 Sht 1
f) E 4444 Sht 2
g) F 6109

The weight, location and moments of inertia about the individual C.G. was tabulated as listed in Table I.

These values were inserted into a computer program to determine the composit weight, moments and products of inertia, C.G. location and radius of gyration. The printout of the results is shown in Appendix I.

4.2 System Response

4.2.1 The system response is calculated in terms of transmissibility (i.e. ratio of output displacement to input displacement). Therefore, to determine the actual output displacement at any frequency, the transmissibility is just multiplied by the corresponding input displacement. The response of the C.G., along with the phase relationships for frequency between 0.25 Hz and 30 Hz were determined and the computer printout is listed in Appendix II.

4.2.2 The transmissibility of the two optical axes (Points A_1 & A_2) were determined for frequencies between 0.25 Hz and 30 Hz. The computer printout is listed in Appendix III.

TABLE I

COMPONENT NO.	$\overline{x}$ (Ft.)	$\overline{y}$ (Ft.)	$\overline{z}$ (Ft.)	Weight (lbs)	I_{xx} Ft-Lb-Sec^2	I_{yy} Ft-Lb-Sec^2	I_{zz} Ft-Lb-Sec^2
1	6.10	1.50	0.75	3100	98.60	863	882.40
2	2.50	4.58	0.75	1210	57	38.50	65
3	9.70	4.58	0.75	1210	57	38.50	65
4	2.50	3.30	2.40	6400	757.20	328.90	1027.20
5	9.70	3.30	2.40	6400	757.20	328.90	1027.20
6	0.17	2.30	2.60	272	3.10	2.50	0.83
7	0.17	3.30	4.03	403	10.20	0.95	9.50
8	0.17	4.30	2.60	272	3.10	2.50	0.83
9	12.00	2.30	2.60	272	3.10	2.50	0.83
10	12.00	3.30	4.03	403	10.20	0.95	9.50
11	12.00	4.30	2.60	272	3.10	2.50	0.83
12	4.75	2.30	2.40	200	1.50	0.98	0.58
13	4.70	2.70	3.80	575	7.90	3.30	5.40
14	7.75	2.30	2.40	200	1.50	0.98	0.58
15	7.67	2.70	3.80	575	7.90	3.30	5.40
16	6.10	1.50	3.58	780	37.80	37.80	12.10
17	2.70	3.31	3.48	300	19.40	7.80	27.20
18	9.46	3.31	3.48	300	19.40	7.80	27.20
19	2.96	3.30	3.85	700	45.70	7.50	52.80
20	9.20	3.30	3.85	700	45.70	7.50	52.80
21	2.29	3.13	4.61	540	4.60	31.50	31.90
22	1.14	3.13	5.47	60	0.33	2.25	2.42
23	9.88	3.13	4.61	540	4.60	31.50	31.90
24	8.70	3.13	5.47	60	0.33	2.25	2.42
25	6.08	2.10	5.58	600	13.30	56.60	68.30

4.2.3 The Eigen values and Eigen Vectors for the system were calculated to determine the system natural frequencies and mode shapes. The mathematical model for the pneumatic isolation is shown in Figure 11.

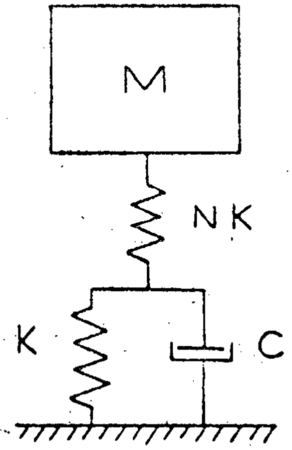

FIGURE 11

Because of the complex nature of the mathematical model, the Eigen values and Eigen vectors are computed for the two extreme cases that is with zero damping (c=0) and with infinite damping (c=∞), with the actual natural frequencies falling between these two extremes as can be seen from the transmissibility plots for the response of the system C.G. The computer printout is listed in Appendix IV.

4.3 Torsional Mode of Base

The base is constructed of a rectangular box structure in the shape of a "U" (see Figure 12), with the greatest portion of the total weight of stero comparator being supported on the arms. The torsional natural frequency of the base frame will effect the isolation efficiency of the isolation system, if its natural frequency is close to that of the isolation system. Therefore, the torsional natural frequency is determined as follows:

4.3 Torsional Mode of Base (continued)

Calculation of Torsional Natural Frequency

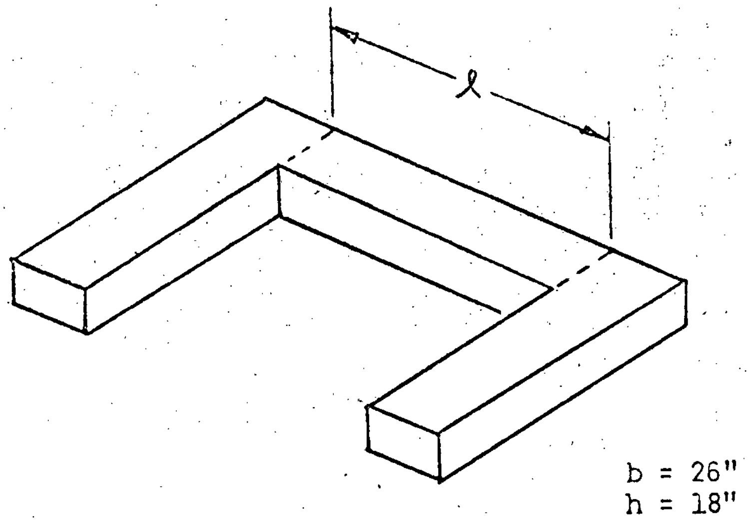

Figure 12a

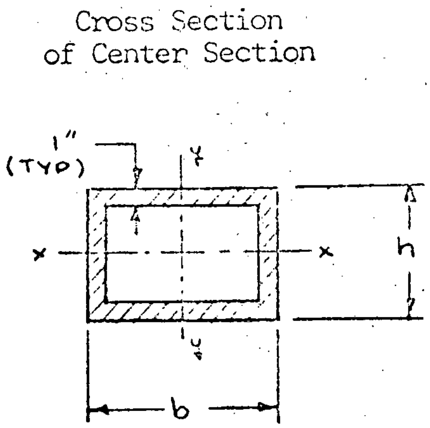

Figure 12b

Stiffness of Center Section in Torsion is:

$$K_t = \frac{GA}{4\pi^2 \ell I_p}$$

G = Shear Modulus (steel $G = 11 \times 10^6$ psi)

A = Cross Section Area

I_p = Polar Moment of Inertia

$$I_p = I_x + I_y$$

$$I_p = \frac{bh\,(h^2 + b^2)}{12} - \frac{(b-2)\,(h-2)}{12}\left[(h-2)^2 - (b-2)^2\right]$$

4.3 Torsional Mode of Base (continued)

$$\underline{I_p = 12{,}376 \text{ in}^4}$$

$$A = bh - (b-2)(h-2)$$

$$\underline{A = 84 \text{ in}^2}$$

$$K_t = \frac{GA^4}{4\pi^2 \ell I_p}$$

$$\underline{\underline{K_t = 50{,}694{,}000 \text{ lb-in/rad}}}$$

$$f_n = \frac{1}{2\pi} \sqrt{\frac{K_t}{I}}$$

Assume the weight acts at a distance $\bar{\gamma}$ on the arm of frame

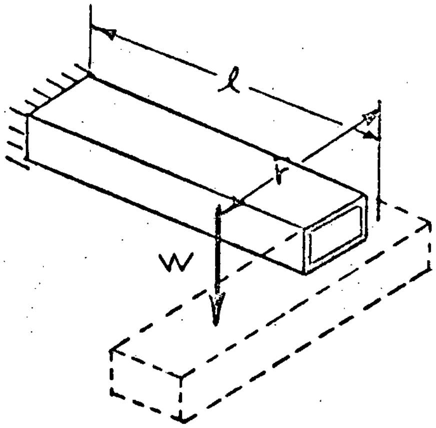

$\bar{\gamma}$ = 21.28"

W = 11,465 lbs

I = $m\bar{\gamma}^2$ = 13,449 in-lb-sec^2

$$f_n = \frac{1}{2\pi} \sqrt{\frac{K_t}{I}}$$

$\boxed{f_n = 9.8 \text{ Hz}}$ Torsional Natural Frequency of Base

The above resonant frequency is well above the natural frequencies of the isolation system. In fact, from the transmissibility plots for the system response, the system is at least 95% isolated at 10 Hz. Therefore, the torsional mode of the base frame should not effect the performance of the isolation system.

APPENDIX I

```
BLOCK          9:07    LA MON 12/18/67    (MOMENT & PRODUCT OF INERTIA PROGRAM)

?

? 25

? 6.10, 1.5, .75, 2.5, 4.58, .75,9.7, 4.58, .75, 2.5, 3.3, 2.4,
? 9.7, 3.3, 2.4, 0.17, 2.3, 2.6, 0.17, 3.3, 4.03, 0.17, 4.3, 2.6,
? 12.0, 2.3, 2.6, 12.0, 3.3, 4.03, 12.0, 4.3, 2.6, 4.75, 2.3, 2.4,
? 4.7, 2.7, 3.8, 7.75, 2.3, 2.4, 7.67, 2.7, 3.8, 6.1, 1.5, 3.58,
? 2.7, 3.31, 3.48, 9.46, 3.31, 3.48, 2.96, 3.3, 3.85, 9.2, 3.3, 3.85,
? 2.29, 3.13, 4.61, 1.14, 3.13, 5.47, 9.88, 3.13, 4.61, 8.7, 3.13, 5.47,
? 6.08, 2.1, 5.58,
? 25
? 0
? 0
? 0
? 3100, 98.6, 863, 882.4, 1210, 57, 38.5, 65, 1210, 57, 38.5, 65,
? 6400, 757.2, 328.9, 1027.2, 6400, 757.2, 328.9, 1027.2, 272, 3.1, 2.5,
? 0.83, 403, 10.2, 0.95, 9.5, 272, 3.1, 2.5, 0.83, 272, 3.1, 2.5, 0.83,
? 403, 10.2, 0.95, 9.5, 272, 3.1, 2.5, 0.83,200, 1.5, 0.98, 0.58, 575,
? 7.9, 3.3, 5.4, 200, 1.5, 0.98, 0.58, 575, 7.9, 3.3, 5.4, 780, 37.8,
? 37.8, 12.1, 300, 19.4, 7.8, 27.2, 300, 19.4, 7.8, 27.2, 700, 45.7,
? 7.5, 52.8, 700, 45.7, 7.5, 52.8, 540, 4.6, 31.5, 31.9, 60, 0.33, 2.25,
? 2.42, 540, 4.6, 31.5, 31.9, 60, 0.33, 2.25, 2.24, 600, 13.3, 56.6, 683
```

```
WEIGHT(LBS.)        CENTER OF GRAVITY(FT.)
                       X          Y          Z
    26344.00         6.10       3.08       2.49

MOMENTS AND PRODUCTS OF INERTIA(FT.-LB.-SEC.SQ.)
       X                Y                  Z
  .36619E+04       .12412E+05       .13438E+05

      YZ               XZ                 XY
 -.23751E+02      -.13706E+02       -.29573E+01

            RADIUS OF GYRATION(FT.)
         X             Y             Z
       2.116         3.895         4.053
```

APPENDIX II

[redacted]

```
BLM02        10:31     LA THU 12/21/67

IN LINEQS
IN .FIRST
IN ARCTAS

? 3,10,.25,.50,.75,10-.0,1.25,1.50,1.75,2.0,2.15,2.30,


MAGNITUDE OF  INPUTS
FORCE=1 LB.   FLOOR TRANSLATION=1 IN,  FLOOR ROTATION=1 RADIAN

OUTPUT UNITS
X,Y,Z--IN. ; ALPHA,BETA,GAMMA--RADIANS ; PHASE--DEGREES

  X INPUT
~~INPUT NO. 1~~

FREQUENCY                X                        Y                          Z
   CPS      MAGNITUDE     PHASE     MAGNITUDE     PHASE     MAGNITUDE     PHASE
    .250    .1118E+01      -.53     .7052E-06    122.34     .2242E-07    116.65
    .500    .1711E+01     -7.45     .6774E-04     -9.53     .1763E-05    -22.26
    .750    .3139E+01    -72.54     .6638E-03    131.25     .8918E-05    113.88
   1.000    .1350E+01   -110.61     .8995E-03   -117.19     .9764E-05    -17.27
   1.250    .9216E+00   -125.18     .3529E-03    151.69     .1261E-04   -114.35
   1.500    .6420E+00   -142.31     .2168E-03     76.58     .1167E-04    155.81
   1.750    .4244E+00   -152.62     .1088E-03     11.09     .7106E-05     80.21
   2.000    .2946E+00   -156.99     .4611E-04    -32.13     .3399E-05     30.32
   2.150    .2438E+00   -158.15     .2836E-04    -48.22     .2216E-05     11.19
   2.300    .2055E+00   -158.72     .1828E-04    -59.66     .1504E-05     -2.84
FREQUENCY             ALPHA                     BETA                      GAMMA
  CPS       MAGNITUDE     PHASE     MAGNITUDE     PHASE     MAGNITUDE     PHASE
    .250    .2112E-07    -57.53     .1045E-02    -12.85     .1771E-03    176.99
    .500    .1527E-05    171.85     .7002E-02    -35.08     .1437E-02    166.52
    .750    .6919E-05    -38.65     .3214E-01   -122.41     .1287E-01     90.40
   1.000    .7220E-05   -149.68     .2423E-01    168.74     .1225E-01    -87.01
   1.250    .1045E-04    135.28     .2003E-01    124.43     .3611E-02   -119.31
   1.500    .1221E-04     61.84     .1395E-01     87.34     .1909E-02   -140.53
   1.750    .9541E-05     -3.81     .8823E-02     64.77     .1098E-02   -153.11
   2.000    .5695E-05    -47.77     .5854E-02     52.47     .7013E-03   -159.11
   2.150    .4172E-05    -64.43     .4729E-02     47.80     .5598E-03   -161.07
   2.300    .3147E-05    -76.50     .3904E-02     44.36     .4584E-03   -162.36

Y INPUT
~~INPUT NO. 2~~

FREQUENCY                X                        Y                          Z
  CPS       MAGNITUDE     PHASE     MAGNITUDE     PHASE     MAGNITUDE     PHASE
    .250    .7052E-06    122.34     .1241E+01     -2.01     .5173E-02    -20.37
    .500    .6774E-04     -9.53     .2792E+01    -53.84     .5801E-01    -97.33
    .750    .6638E-03    131.25     .7337E+00   -109.63     .4449E-01    165.16
   1.000    .8995E-03   -117.19     .4129E+00    -88.18     .4174E-01    127.11
   1.250    .3529E-03    151.69     .4465E+00    -76.03     .4163E-01     87.84
   1.500    .2168E-03     76.58     .5565E+00    -87.42     .3830E-01     44.09
   1.750    .1088E-03     11.09     .5384E+00   -114.94     .2704E-01     -2.54
   2.000    .4611E-04    -32.13     .3900E+00   -135.87     .1493E-01    -35.25
   2.150    .2836E-04    -48.22     .3138E+00   -142.83     .1044E-01    -47.27
   2.300    .1828E-04    -59.66     .2561E+00   -147.16     .7515E-02    -55.69
```

FREQUENCY	ALPHA		BETA		GAMMA	
CPS	MAGNITUDE	PHASE	MAGNITUDE	PHASE	MAGNITUDE	PHASE
.250	.4878E-02	165.53	.7776E-07	152.87	.4145E-06	163.81
.500	.5026E-01	96.78	.3428E-05	64.68	.2273E-04	92.32
.750	.3453E-01	12.62	.6579E-05	27.22	.7779E-04	-4.36
1.000	.3087E-01	-5.30	.1543E-04	-164.68	.1547E-03	-156.86
1.250	.3449E-01	-22.52	.4903E-05	-124.21	.7382E-04	165.85
1.500	.4007E-01	-49.88	.1235E-04	-162.43	.6401E-04	134.99
1.750	.3631E-01	-86.56	.1254E-04	141.09	.5028E-04	97.12
2.000	.2502E-01	-113.33	.8518E-05	102.20	.3193E-04	69.70
2.150	.1966E-01	-122.89	.6559E-05	87.68	.2426E-04	59.87
2.300	.1572E-01	-129.35	.5138E-05	77.34	.1890E-04	53.19

Z INPUT

~~INPUT NO. 3~~

FREQUENCY	X		Y		Z	
CPS	MAGNITUDE	PHASE	MAGNITUDE	PHASE	MAGNITUDE	PHASE
.250	.2241E-07	116.65	.5173E-02	-20.37	.1057E+01	-.67
.500	.1763E-05	-22.26	.5801E-01	-97.33	.1226E+01	-5.27
.750	.8918E-05	113.88	.4449E-01	165.16	.1482E+01	-17.09
1.000	.9764E-05	-17.27	.4174E-01	127.11	.1679E+01	-37.76
1.250	.1261E-04	-114.35	.4163E-01	87.84	.1592E+01	-61.74
1.500	.1167E-04	155.81	.3830E-01	44.09	.1314E+01	-80.79
1.750	.7106E-05	80.21	.2704E-01	-2.54	.1049E+01	-93.60
2.000	.3399E-05	30.32	.1493E-01	-35.25	.8484E+00	-102.40
2.150	.2216E-05	11.19	.1044E-01	-47.27	.7550E+00	-106.48
2.300	.1504E-05	-2.84	.7515E-02	-55.69	.6770E+00	-109.95

FREQUENCY	ALPHA		BETA		GAMMA	
CPS	MAGNITUDE	PHASE	MAGNITUDE	PHASE	MAGNITUDE	PHASE
.250	.1549E-03	159.77	.2470E-08	147.12	.1316E-07	158.05
.500	.1308E-02	84.05	.8921E-07	51.95	.5916E-06	79.59
.750	.4638E-03	-4.74	.8837E-07	9.87	.1045E-05	-21.72
1.000	.3350E-03	94.63	.1675E-06	-64.75	.1679E-05	-56.93
1.250	.1233E-02	71.44	.1752E-06	-30.24	.2638E-05	-100.20
1.500	.2157E-02	29.35	.6646E-06	-83.20	.3446E-05	-145.78
1.750	.2371E-02	-17.44	.8186E-06	-149.79	.3283E-05	166.24
2.000	.1844E-02	-50.89	.6278E-06	164.65	.2354E-05	132.15
2.150	.1536E-02	-63.48	.5124E-06	147.09	.1895E-05	119.28
2.300	.1294E-02	-72.53	.4228E-06	134.16	.1555E-05	110.01

4-

```
BLM02      14:34    LA WED 12/20/67

IN LINEQS
IN .FIRST
IN ARCTAS
```

P1 = 43.47 psi   P3 = 67.19 psi

P2 = 43.47 psi

```
? 3,10,2.5,3,5,5.5,8,10,15,20,25,30



MAGNITUDE OF INPUTS
FORCE=1 LB.  FLOOR TRANSLATION=1 IN.  FLOOR ROTATION=1 RADIAN

OUTPUT UNITS
X,Y,Z--IN. ; ALPHA,BETA,GAMMA--RADIANS ; PHASE--DEGREES
```

X INPUT

~~INPUT NO. 1~~ (INPUT X DIRECTION 1.216 MICRONS)

TRANSMISSIBILITY DATA MULTIPLY VALUE BY INPUT TO GET ACTUAL OUTPUT

```
FREQUENCY              X                           Y                           Z
   CPS     MAGNITUDE     PHASE      MAGNITUDE     PHASE      MAGNITUDE     PHASE
   2.500   .1677E+00    -158.89     .1090E-04    -70.28      .9555E-06    -16.48
   3.000   .1104E+00    -157.89     .3893E-05    -84.50      .3907E-06    -37.21
   5.000   .3918E-01    -149.49     .3656E-06    -90.67      .5046E-07    -66.04
   5.500   .3287E-01    -147.33     .2503E-06    -88.60      .3591E-07    -69.09
   8.000   .1733E-01    -137.69     .6610E-07    -75.33      .1010E-07    -77.26
  10.000   .1229E-01    -131.52     .3327E-07    -65.51      .4919E-08    -80.21
  15.000   .7045E-02    -120.72     .1118E-07    -48.04      .1388E-08    -83.67
  20.000   .4952E-02    -114.08     .5620E-08    -37.41      .5759E-09    -85.28
  25.000   .3833E-02    -109.69     .3404E-08    -30.49      .2927E-09    -86.23
  30.000   .3135E-02    -106.61     .2292E-08    -25.67      .1687E-09    -86.86

FREQUENCY            ALPHA                       BETA                        GAMMA
   CPS     MAGNITUDE     PHASE      MAGNITUDE     PHASE      MAGNITUDE     PHASE
   2.500   .2267E-05     -88.02     .3108E-02     41.07      .3626E-03   -163.41
   3.000   .1201E-05    -104.65     .1950E-02     36.57      .2258E-03   -164.28
   5.000   .3074E-06    -120.54     .6258E-03     35.83      .7127E-04   -161.20
   5.500   .2501E-06    -120.73     .5174E-03     37.00      .5850E-04   -160.01
   8.000   .1244E-06    -117.32     .2605E-03     44.08      .2796E-04   -153.79
  10.000   .8807E-07    -113.75     .1812E-03     49.47      .1853E-04   -148.98
  15.000   .5152E-07    -107.16     .1016E-03     59.60      .9308E-05   -138.58
  20.000   .3683E-07    -103.22     .7077E-04     65.06      .6011E-05   -130.59
  25.000   .2881E-07    -100.71     .5455E-04     70.38      .4409E-05   -124.52
  30.000   .2371E-07     -98.98     .4451E-04     73.43      .3481E-05   -119.87
```

Y INPUT

~~INPUT NO. 2~~ (INPUT Y DIRECTION 1.606 MICRONS)

```
FREQUENCY              X                           Y                           Z
   CPS     MAGNITUDE     PHASE      MAGNITUDE     PHASE      MAGNITUDE     PHASE
   2.500   .1090E-04     -70.28     .2012E+00   -150.49      .5089E-02    -63.47
   3.000   .3893E-05     -84.50     .1242E+00   -153.25      .2325E-02    -74.47
   5.000   .3656E-06     -90.67     .4066E-01   -148.00      .3529E-03    -89.23
   5.500   .2503E-06     -88.60     .3388E-01   -146.05      .2542E-03    -90.92
   8.000   .6610E-07     -75.33     .1757E-01   -136.93      .7178E-04    -95.43
  10.000   .3327E-07     -65.51     .1240E-01   -130.94      .3433E-04    -96.59
  15.000   .1118E-07     -48.04     .7071E-02   -120.36      .9272E-05    -96.61
  20.000   .5620E-08     -37.41     .4962E-02   -113.80      .3750E-05    -95.75
  25.000   .3404E-08     -30.49     .3838E-02   -109.47      .1878E-05    -94.94
  30.000   .2292E-08     -25.67     .3138E-02   -106.44      .1073E-05    -94.28
```

FREQUENCY	ALPHA		BETA		GAMMA	
CPS	MAGNITUDE	PHASE	MAGNITUDE	PHASE	MAGNITUDE	PHASE
2.500	.1207E-01	-135.01	.3843E-05	67.65	.1412E-04	47.28
3.000	.7144E-02	-141.91	.2155E-05	54.07	.7996E-05	39.93
5.000	.2150E-02	-143.72	.5800E-06	42.06	.2265E-05	37.33
5.500	.1770E-02	-142.57	.4701E-06	42.14	.1854E-05	38.39
8.000	.8844E-03	-135.49	.2237E-06	46.50	.9131E-06	45.16
10.000	.6146E-03	-130.13	.1523E-06	51.03	.6317E-06	50.39
15.000	.3442E-03	-120.09	.8337E-07	60.34	.3521E-06	60.25
20.000	.2398E-03	-113.69	.5757E-07	66.53	.2450E-06	66.57
25.000	.1849E-03	-109.41	.4418E-07	70.72	.1887E-06	70.79
30.000	.1508E-03	-106.40	.3596E-07	73.69	.1539E-06	73.77

Z INPUT

~~INPUT NO.~~ (INPUT Z DIRECTION 1.22 MICRONS)

FREQUENCY	X		Y		Z	
CPS	MAGNITUDE	PHASE	MAGNITUDE	PHASE	MAGNITUDE	PHASE
2.500	.9555E-06	-16.48	.5089E-02	-63.47	.5917E+00	-113.89
3.000	.3907E-06	-37.21	.2325E-02	-74.47	.4410E+00	-121.55
5.000	.5046E-07	-66.04	.3529E-03	-89.23	.1898E+00	-139.36
5.500	.3591E-07	-69.09	.2542E-03	-90.92	.1611E+00	-142.28
8.000	.1010E-07	-77.26	.7178E-04	-95.43	.8236E-01	-152.45
10.000	.4919E-08	-80.21	.3433E-04	-96.59	.5432E-01	-157.46
15.000	.1388E-08	-83.67	.9272E-05	-96.61	.2495E-01	-164.60
20.000	.5759E-09	-85.28	.3750E-05	-95.75	.1421E-01	-168.35
25.000	.2927E-09	-86.23	.1878E-05	-94.94	.9145E-02	-170.64
30.000	.1687E-09	-86.86	.1073E-05	-94.28	.6371E-02	-172.18

FREQUENCY	ALPHA		BETA		GAMMA	
CPS	MAGNITUDE	PHASE	MAGNITUDE	PHASE	MAGNITUDE	PHASE
2.500	.1058E-02	-81.21	.3369E-06	121.45	.1238E-05	101.08
3.000	.7171E-03	-94.62	.2163E-06	101.37	.8026E-06	87.23
5.000	.2967E-03	-119.10	.8004E-07	66.68	.3126E-06	61.96
5.500	.2540E-03	-123.05	.6743E-07	61.65	.2660E-06	57.90
8.000	.1351E-03	-137.42	.3416E-07	44.57	.1395E-06	43.23
10.000	.9089E-04	-144.83	.2253E-07	36.33	.9341E-07	35.69
15.000	.4275E-04	-155.73	.1036E-07	24.70	.4374E-07	24.62
20.000	.2458E-04	-161.56	.5900E-08	18.66	.2511E-07	18.70
25.000	.1589E-04	-165.16	.3799E-08	14.98	.1623E-07	15.05
30.000	.1110E-04	-167.59	.2647E-08	12.50	.1133E-07	12.58

APPENDIX III

```
3LM03      14:56    LA WED 12/27/67

IN LINEQS
IN .FIRST
IN ARCTA$
IN .FIRST

? 6.10,3.08,2.49,10,.25,.50,.75,1.0,1.25,1.5,1.75,2.0,2.15,2.3

? 3,6,2.96,3.54,4.13,1,1,1,1,2.96,3.54,4.13,2,1,1,1,2.96,3.54,4.13,3

? 1,1,1,9.2,3.54,4.13,1,1,1,1,9.2,3.54,4.13,2,1,1,1,9.2,3.54,4.13,3,1,1

? 1

POINT NO. 1     PT A2   X DIRECTION
   ~~FORCE NO. 1~~      FREQUENCY   DISPLACEMENT (X)
   X INPUT                 .25        .11367E+01
                           .50        .18263E+01
                           .75        .35096E+01
                          1.00        .15545E+01
                          1.25        .88412E+00
                          1.50        .51870E+00
                          1.75        .31098E+00
                          2.00        .20618E+00
                          2.15        .16820E+00
                          2.30        .14065E+00
   ~~FORCE NO. 2~~      FREQUENCY   DISPLACEMENT (X)
   Y INPUT                 .25        .43846E-05
                           .50        .19719E-03
                           .75        .53625E-03
                          1.00        .19225E-02
                          1.25        .78275E-03
                          1.50        .57966E-03
                          1.75        .46684E-03
                          2.00        .31145E-03
                          2.15        .24156E-03
                          2.30        .19107E-03
   ~~FORCE NO. 3~~      FREQUENCY   DISPLACEMENT (X)
   Z INPUT                 .25        .13930E-06
                           .50        .51316E-05
                           .75        .72040E-05
                          1.00        .20868E-04
                          1.25        .27975E-04
                          1.50        .31203E-04
                          1.75        .30484E-04
                          2.00        .22956E-04
                          2.15        .18870E-04
                          2.30        .15725E-04
POINT NO. 2  PT "A2"  Y DIRECTION
   ~~FORCE NO. 1~~      FREQUENCY   DISPLACEMENT (Y)
   X INPUT                 .25        .66714E-02
                           .50        .54181E-01
                           .75        .48452E+00
                          1.00        .46068E+00
                          1.25        .13610E+00
                          1.50        .72308E-01
                          1.75        .41646E-01
                          2.00        .26493E-01
                          2.15        .21112E-01
                          2.30        .17273E-01
```

7

```
                 FREQUENCY    DISPLACEMENT (Y)
  Y INPUT           .25       .11476E+01
                    .50       .19908E+01
                    .75       .68210E+00
                   1.00       .77855E+00
                   1.25       .10128E+01
                   1.50       .12781E+01
                   1.75       .12174E+01
                   2.00       .86684E+00
                   2.15       .69103E+00
                   2.30       .55951E+00
                 FREQUENCY    DISPLACEMENT (Y)
  Z INPUT           .25       .21248E-02
                    .50       .32309E-01
                    .75       .35584E-01
                   1.00       .47499E-01
                   1.25       .65361E-01
                   1.50       .80214E-01
                   1.75       .73253E-01
                   2.00       .50924E-01
                   2.15       .40421E-01
                   2.30       .32790E-01
POINT NO.  Z  PT "A"; Z DIRECTION
                 FREQUENCY    DISPLACEMENT (Z)
  X INPUT           .25       .39370E-01
                    .50       .26386E+00
                    .75       .12110E+01
                   1.00       .91284E+00
                   1.25       .75471E+00
                   1.50       .52573E+00
                   1.75       .33244E+00
                   2.00       .22059E+00
                   2.15       .17821E+00
                   2.30       .14710E+00
                 FREQUENCY    DISPLACEMENT (Z)
  Y INPUT           .25       .21786E-01
                    .50       .22149E+00
                    .75       .15224E+00
                   1.00       .14611E+00
                   1.25       .18028E+00
                   1.50       .22211E+00
                   1.75       .20539E+00
                   2.00       .14224E+00
                   2.15       .11178E+00
                   2.30       .89379E-01
                 FREQUENCY    DISPLACEMENT (Z)
  Z INPUT           .25       .10559E+01
                    .50       .12258E+01
                    .75       .14847E+01
                   1.00       .16776E+01
                   1.25       .15872E+01
                   1.50       .13096E+01
                   1.75       .10517E+01
                   2.00       .85478E+00
                   2.15       .76120E+00
                   2.30       .68268E+00
```

```
POINT NO. 4  PT A1  X DIRECTION
~~FORCE NO. 1~~       FREQUENCY    DISPLACEMENT (x)
X INPUT                  .25        .11367E+01
                         .50        .18263E+01
                         .75        .35096E+01
                        1.00        .15545E+01
                        1.25        .88412E+00
                        1.50        .51870E+00
                        1.75        .31098E+00
                        2.00        .20618E+00
                        2.15        .16820E+00
                        2.30        .14065E+00
~~FORCE NO. 2~~       FREQUENCY    DISPLACEMENT (x)
Y INPUT                  .25        .43846E-05
                         .50        .19719E-03
                         .75        .53625E-03
                        1.00        .19225E-02
                        1.25        .78275E-03
                        1.50        .57966E-03
                        1.75        .46684E-03
                        2.00        .31145E-03
                        2.15        .24156E-03
                        2.30        .19107E-03
~~FORCE NO. 3~~       FREQUENCY    DISPLACEMENT (x)
Z INPUT                  .25        .13930E-06
                         .50        .51316E-05
                         .75        .72040E-05
                        1.00        .20868E-04
                        1.25        .27975E-04
                        1.50        .31203E-04
                        1.75        .30484E-04
                        2.00        .22956E-04
                        2.15        .18870E-04
                        2.30        .15725E-04
POINT NO. 3  PT "A1" Y DIRECTION
~~FORCE NO. 1~~       FREQUENCY    DISPLACEMENT (Y)
X INPUT                  .25        .65868E-02
                         .50        .53416E-01
                         .75        .47917E+00
                        1.00        .45649E+00
                        1.25        .13427E+00
                        1.50        .70602E-01
                        1.75        .40586E-01
                        2.00        .26020E-01
                        2.15        .20803E-01
                        2.30        .17054E-01
```

~~FORCE NO. 2~~

Y INPUT

3

```
FORCE NO. 2   FREQUENCY   DISPLACEMENT (Y)
                 .25        .11475E+01
                 .50        .19896E+01
                 .75        .68598E+00
                1.00        .77281E+00
                1.25        .10079E+01
                1.50        .12736E+01
                1.75        .12138E+01
                2.00        .86451E+00
                2.15        .68925E+00
                2.30        .55311E+00
```

~~FORCE NO. 3~~

Z INPUT

```
              FREQUENCY   DISPLACEMENT (Y)
                 .25        .21238E-02
                 .50        .32265E-01
                 .75        .35506E-01
                1.00        .47373E-01
                1.25        .65163E-01
                1.50        .79957E-01
                1.75        .73007E-01
                2.00        .50748E-01
                2.15        .40279E-01
                2.30        .32674E-01
```

POINT NO. 5 PT "A," Z DIRECTION

~~FORCE NO. 1~~

X INPUT

```
              FREQUENCY   DISPLACEMENT (Z)
                 .25        .38869E-01
                 .50        .26048E+00
                 .75        .11956E+01
                1.00        .90125E+00
                1.25        .74520E+00
                1.50        .51916E+00
                1.75        .32826E+00
                2.00        .21778E+00
                2.15        .17592E+00
                2.30        .14521E+00
```

~~FORCE NO. 2~~

Y INPUT

```
              FREQUENCY   DISPLACEMENT (Z)
                 .25        .21791E-01
                 .50        .22170E+00
                 .75        .15273E+00
                1.00        .14497E+00
                1.25        .18013E+00
                1.50        .22162E+00
                1.75        .20467E+00
                2.00        .14168E+00
                2.15        .11134E+00
                2.30        .89022E-01
```

~~FORCE NO. 3~~

Z INPUT

```
              FREQUENCY   DISPLACEMENT (Z)
                 .25        .10559E+01
                 .50        .12258E+01
                 .75        .14847E+01
                1.00        .16777E+01
                1.25        .15872E+01
                1.50        .13097E+01
                1.75        .10518E+01
                2.00        .85478E+00
                2.15        .76119E+00
                2.30        .68266E+00
```

```
BLM03     11:40    LA WED 12/27/67    10

IN LINEQS
IN .FIRST
IN ARCTAS
IN .FIRST

? 6.10,3.08,2.49,10,2.5,3,5,5.5,8,10,15,20,25,30,

? 3,6,2.96,3.54,4.13,1,1,1,1,2.96,3.54,4.13,2,1,1,1,2.96,3.54,4.13,3,

? 1,1,1,9.2,3.54,4.13,1,1,1,1,9.2,3.54,4.13,2,1,1,1,9.2,3.54,4.13

? 3,1,1,1

POINT NO.  1   PT "A2"  X DIRECTION
   ~~FORCE NO. 1~~      FREQUENCY    DISPLACEMENT (x)
   X INPUT                2.50         .11416E+00
                          3.00         .75084E-01
                          5.00         .27333E-01
                          5.50         .23051E-01
                          8.00         .12358E-01
                         10.00         .88262E-02
                         15.00         .50948E-02
                         20.00         .35909E-02
                         25.00         .27832E-02
                         30.00         .22778E-02
   ~~FORCE NO. 2~~      FREQUENCY    DISPLACEMENT (x)
   Y INPUT                2.50         .14477E-03
                          3.00         .83373E-04
                          5.00         .23660E-04
                          5.50         .19319E-04
                          8.00         .94074E-05
                         10.00         .64701E-05
                         15.00         .35811E-05
                         20.00         .24839E-05
                         25.00         .19105E-05
                         30.00         .15570E-05
   ~~FORCE NO. 3~~      FREQUENCY    DISPLACEMENT (x)
   Z INPUT                2.50         .12691E-04
                          3.00         .83684E-05
                          5.00         .32654E-05
                          5.50         .27715E-05
                          8.00         .14369E-05
                         10.00         .95679E-06
                         15.00         .44480E-06
                         20.00         .25456E-06
                         25.00         .16428E-06
                         30.00         .11460E-06
POINT NO.  2   PT "A2"  Y DIRECTION
   ~~FORCE NO. 1~~      FREQUENCY    DISPLACEMENT (Y)
   X INPUT                2.50         .13654E-01
                          3.00         .84964E-02
                          5.00         .26806E-02
                          5.50         .22002E-02
                          8.00         .10517E-02
                         10.00         .69672E-03
                         15.00         .34985E-03
                         20.00         .22586E-03
                         25.00         .16561E-03
                         30.00         .13072E-03
```

```
~~FORCE NO. 2~~     FREQUENCY    DISPLACEMENT (Y)
Y INPUT               2.50        .43535E+00
                      3.00        .26379E+00
                      5.00        .82997E-01
                      5.50        .68752E-01
                      8.00        .35005E-01
                     10.00        .24519E-01
                     15.00        .13857E-01
                     20.00        .96907E-02
                     25.00        .74833E-02
                     30.00        .61120E-02
~~FORCE NO. 3~~     FREQUENCY    DISPLACEMENT (Y)
Z INPUT               2.50        .25769E-01
                      3.00        .16344E-01
                      5.00        .61603E-02
                      5.50        .52253E-02
                      8.00        .27176E-02
                     10.00        .18152E-02
                     15.00        .84775E-03
                     20.00        .48617E-03
                     25.00        .31406E-03
                     30.00        .21923E-03
POINT NO. 3 PT. "A2"  Z DIRECTION
~~FORCE NO. 1~~     FREQUENCY    DISPLACEMENT (Z)
X INPUT               2.50        .11713E+00
                      3.00        .73484E-01
                      5.00        .23581E-01
                      5.50        .19496E-01
                      8.00        .98147E-02
                     10.00        .68298E-02
                     15.00        .38272E-02
                     20.00        .26667E-02
                     25.00        .20556E-02
                     30.00        .16772E-02
~~FORCE NO. 2~~     FREQUENCY    DISPLACEMENT (Z)
Y INPUT               2.50        .68565E-01
                      3.00        .40462E-01
                      5.00        .12099E-01
                      5.50        .99495E-02
                      8.00        .49456E-02
                     10.00        .34270E-02
                     15.00        .19115E-02
                     20.00        .13295E-02
                     25.00        .10239E-02
                     30.00        .83498E-03
~~FORCE NO. 3~~     FREQUENCY    DISPLACEMENT (Z)
Z INPUT               2.50        .59662E+00
                      3.00        .44459E+00
                      5.00        .19136E+00
                      5.50        .16239E+00
                      8.00        .83080E-01
                     10.00        .54815E-01
                     15.00        .25182E-01
                     20.00        .14341E-01
                     25.00        .92326E-02
                     30.00        .64323E-02
```

```
~~FORCE NO. 1~~     FREQUENCY   DISPLACEMENT (X)
X INPUT               2.50        .11416E+00
                      3.00        .75084E-01
                      5.00        .27333E-01
                      5.50        .23051E-01
                      8.00        .12358E-01
                     10.00        .88262E-02
                     15.00        .50948E-02
                     20.00        .35909E-02
                     25.00        .27832E-02
                     30.00        .22778E-02
~~FORCE NO. 2~~     FREQUENCY   DISPLACEMENT (X)
Y INPUT               2.50        .14477E-03
                      3.00        .83373E-04
                      5.00        .23660E-04
                      5.50        .19319E-04
                      8.00        .94074E-05
                     10.00        .64701E-05
                     15.00        .35811E-05
                     20.00        .24839E-05
                     25.00        .19105E-05
                     30.00        .15570E-05
~~FORCE NO. 3~~     FREQUENCY   DISPLACEMENT (X)
Z INPUT               2.50        .12691E-04
                      3.00        .83684E-05
                      5.00        .32654E-05
                      5.50        .27715E-05
                      8.00        .14369E-05
                     10.00        .95679E-06
                     15.00        .44480E-06
                     20.00        .25456E-06
                     25.00        .16428E-06
                     30.00        .11460E-06
POINT NO. 5 PT "A," Y DIRECTION
~~FORCE NO. 1~~     FREQUENCY   DISPLACEMENT(Y)
X INPUT               2.50        .13501E-01
                      3.00        .84133E-02
                      5.00        .26558E-02
                      5.50        .21799E-02
                      8.00        .10422E-02
                     10.00        .69066E-03
                     15.00        .34711E-03
                     20.00        .22427E-03
                     25.00        .16453E-03
                     30.00        .12992E-03
~~FORCE NO. 2~~     FREQUENCY   DISPLACEMENT (Y)
Y INPUT               2.50        .43431E+00
                      3.00        .26319E+00
                      5.00        .82828E-01
                      5.50        .68614E-01
                      8.00        .34937E-01
                     10.00        .24471E-01
                     15.00        .13831E-01
                     20.00        .96723E-02
                     25.00        .74692E-02
                     30.00        .61005E-02
```

```
 ~~FORCE NO. 3~~     FREQUENCY    DISPLACEMENT (Y)
  Z INPUT              2.50        .25676E-01
                       3.00        .16284E-01
                       5.00        .61369E-02
                       5.50        .52054E-02
                       8.00        .27072E-02
                      10.00        .18082E-02
                      15.00        .84448E-03
                      20.00        .48429E-03
                      25.00        .31285E-03
                      30.00        .21838E-03
PØINT NØ.  8 PT "A,"   Z DIRECTION
   ~~FORCE NO. 1~~     FREQUENCY    DISPLACEMENT (Z)
   X INPUT             2.50        .11562E+00
                       3.00        .72538E-01
                       5.00        .23278E-01
                       5.50        .19245E-01
                       8.00        .96884E-02
                      10.00        .67418E-02
                      15.00        .37779E-02
                      20.00        .26324E-02
                      25.00        .20291E-02
                      30.00        .16556E-02
    ~~FORCE NO. 2~~    FREQUENCY    DISPLACEMENT (Z)
    Y INPUT            2.50        .68292E-01
                       3.00        .40304E-01
                       5.00        .12055E-01
                       5.50        .99144E-02
                       8.00        .49289E-02
                      10.00        .34156E-02
                      15.00        .19052E-02
                      20.00        .13252E-02
                      25.00        .10206E-02
                      30.00        .83228E-03
    ~~FORCE NO. 3~~    FREQUENCY    DISPLACEMENT (Z)
    Z INPUT            2.50        .59660E+00
                       3.00        .44458E+00
                       5.00        .19135E+00
                       5.50        .16239E+00
                       8.00        .83077E-01
                      10.00        .54813E-01
                      15.00        .25181E-01
                      20.00        .14341E-01
                      25.00        .92323E-02
                      30.00        .64321E-02
```

APPENDIX IV

```
31M04      9:38    LA TUE 12/26/67

IN SPEIGS
IN .FIRST
IN EIGIXS

? 26344,3661.9,12412,13438,10,3


THE UNDAMPED NATURAL FREQUENCIES ARE CALCULATED ASSUMING
PRØDUCTS ØF INERTIA ARE ZERØ, HØRIZØNTAL DAMPING
RATIØ IS ZERØ, AND VERTICAL DAMPING RATIØ IS ZERØ(CASE A)
AND INFINITE(CASE B)


CASE A


MØDE           1           2           3           4           5           6

FREQ(CPS)     .687        .504       1.052       1.603       1.296        .903

EIGEN VECTØRS

   X       .295E-01    .000E+00    .000E+00    .000E+00   -.187E-01    .144E-02
   Y       .000E+00    .304E-01   -.125E-02    .172E-01    .000E+00    .000E+00
   Z       .000E+00    .907E-03    .349E-01    .934E-03    .000E+00    .000E+00
ALPHA      .000E+00   -.815E-02   -.173E-03    .144E-01    .000E+00    .000E+00
BETA       .471E-02    .000E+00    .000E+00    .000E+00    .754E-02    .125E-02
GAMMA     -.938E-03    .000E+00    .000E+00    .000E+00   -.826E-03    .854E-02

CASE B


MØDE           1           2           3           4           5           6

FREQ(CPS)     .843        .781       2.439       2.326       2.345        .929

EIGEN VECTØRS

   X       .292E-01    .000E+00    .000E+00    .000E+00   -.401E-02    .187E-01
   Y       .000E+00    .342E-01    .377E-02    .608E-02    .000E+00    .000E+00
   Z       .000E+00    .356E-03    .288E-01   -.198E-01    .000E+00    .000E+00
ALPHA      .000E+00   -.338E-02    .921E-02    .133E-01    .000E+00    .000E+00
BETA       .805E-03    .000E+00    .000E+00    .000E+00    .892E-02    .650E-03
GAMMA     -.466E-02    .000E+00    .000E+00    .000E+00   -.107E-03    .726E-02
```

APPENDIX V

ROBERT DOLL
12-13-67

MOMENT OF INERTIA OF TRIANGULAR PRISM

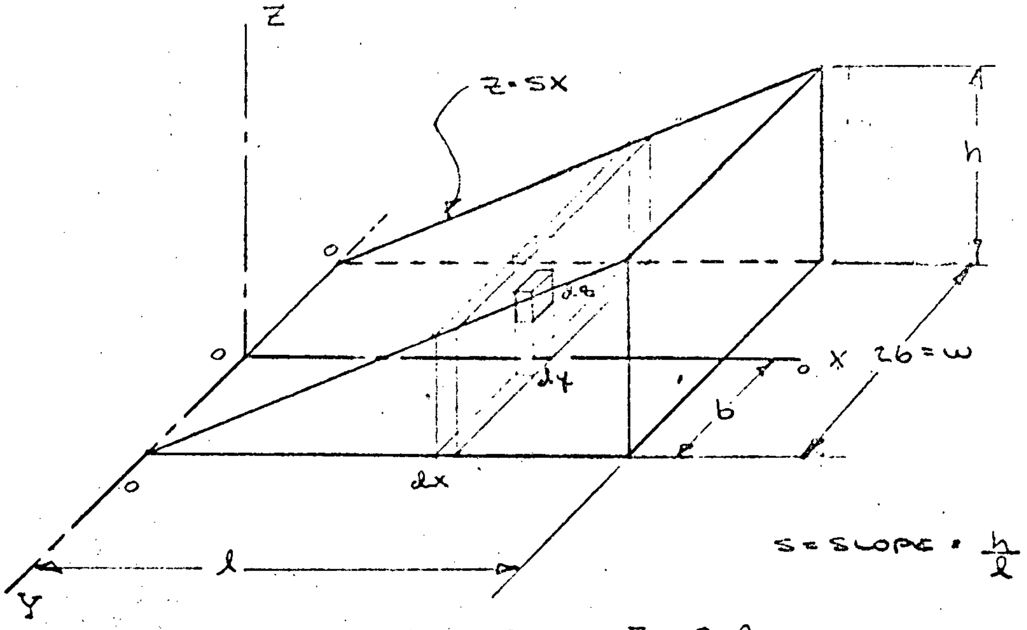

$s = \text{SLOPE} = \frac{h}{l}$

COORDINATES TO C.G. $\bar{x} = \frac{2}{3} l$

$\bar{y} = 0$

$\bar{z} = \frac{1}{3} h$

MOMENT OF INERTIA ABOUT X AXIS

$$(I_{x\text{-}x})_0 = 2\int_{x=0}^{l}\int_{y=0}^{b}\int_{z=0}^{sx}(y^2+z^2)\rho\, dx\, dy\, dz$$

$$= 2\rho\int_0^l\int_0^b \left(y^2 z + \frac{z^3}{2}\right)\Big|_0^{sx} dx\, dy$$

$$= 2\rho\int_0^l\int_0^b \left(y^2 sx + \frac{(sx)^3}{2}\right) dx\, dy$$

$$= 2\rho\int_0^l \left(\frac{y^3}{3}(sx) + \frac{(sx)^3}{3}y\right)\Big|_0^b dx$$

$$= 2\rho\int_0^l \left(\frac{b^3}{3}(sx) + b\frac{(sx)^3}{3}\right) dx$$

$$= 2\rho\left[\frac{b^3}{3}\frac{sx^2}{2} + \frac{b s^3 x^4}{12}\right]_0^l$$

$$(I_{x-x})_0 = \frac{2\rho b^3 s l^2}{6} + \frac{2 b s^3 l^4 \rho}{12}$$

MASS (m) = $\rho V = \rho \frac{2bl(sl)}{2} = \rho b s l^2$

$$(I_{x-x})_0 = \left(\frac{mb^2}{3} + \frac{m s^2 l^2}{6}\right) \qquad \text{LET} \quad s = \frac{h}{l}$$

$$(I_{x-x})_0 = \left(\frac{mb^2}{3} + \frac{mh^2}{6}\right) \qquad \text{LET} \quad 2b = w$$

$$\boxed{(I_{x-x})_0 = \frac{m}{6}\left[w^2 + h^2\right]}$$

MOMENT OF INERTIA ABOUT C.G.

$$(I_{x-x})_0 = (I_{x-x})_{c.g} + m\bar{r}^2$$

$$(I_{x-x})_{c.g} = (I_{x-x})_0 - m\bar{r}^2 \qquad r = \frac{h}{3} \qquad r^2 = \frac{h^2}{9}$$

$$= \frac{m}{6}\left[w^2 + h^2\right] - \frac{mh^2}{9}$$

$$\boxed{(I_{x-x})_{c.g.} = \frac{m}{18}\left[\frac{3}{2}w^2 + h^2\right]}$$

MOMENT OF INERTIA ABOUT Y AXIS

$$(I_{y-y})_0 = 2\int_{x=0}^{l}\int_{y=0}^{b}\int_{z=0}^{sx} \rho(x^2 + z^2)\,dx\,dy\,dz$$

$$= 2\rho \int_0^l \int_0^b \left(x^2 z + \frac{z^3}{3}\right)\Big|_0^{sx} dx\,dy$$

$$= 2\rho \int_0^l \int_0^b \left(s x^3 + \frac{s^3 x^3}{3}\right) dx\,dy$$

$$(I_{y-y})_0 = 2\rho \int_0^l \left(s x^3 y + \frac{s^3 x^3}{3} y \right)\Big|_0^b dx$$

$$= 2\rho \int_0^l \left(s x^3 b + \frac{s^3 x^3}{3} b \right) dx$$

$$= 2\rho \left[\frac{s b x^4}{4} + \frac{s^3 x^4 b}{12} \right]^l$$

$$= 2\rho \left[\frac{s b l^4}{4} + \frac{s^3 l^4 b}{12} \right]$$

$m = \rho b s l^2$ $s = \frac{h}{l}$

$$\boxed{(I_{y-y})_0 = \frac{m}{6}\left[3l^2 + h^2\right]}$$

MOMENT OF INERTIA ABOUT C.G.

$(I_{y-y})_0 = (I_{y-y})_{cg} + m r^2$ $r^2 = (\frac{2}{3})^2 l^2 + (\frac{1}{3})^2 h^2$

$r^2 = \frac{4}{9} l^2 + \frac{1}{9} h^2$

$(I_{y-y})_{cg} = (I_{y-y})_0 - m r^2$

$(I_{y-y})_{cg} = \frac{m}{6}\left[3l^2 + h^2\right] - m\frac{4}{9} l^2 - \frac{m}{9} h^2$

$$\boxed{(I_{y-y})_{cg} = \frac{m}{18}\left[l^2 + h^2\right]}$$

MOMENT OF INERTIA ABOUT Z AXIS

$$(I_{z-z})_0 = 2 \int_{x=0}^{l} \int_{y=0}^{b} \int_{z=0}^{sx} (x^2 + y^2)\rho \, dx \, dy \, dz$$

$$= 2\rho \int_0^l \int_0^b (x^2 z + y^2 z)\Big|_0^{sx} dx \, dy$$

$$(I_{z-z})_0 = 2\rho \int_0^l \int_0^b (sx^3 + sy^2x)\,dx\,dy$$

$$= 2\rho \int_0^l \left(sx^3y + \frac{sy^3}{3}x\right)\Big|_0^b dx$$

$$= 2\rho \int_0^l \left(sx^3b + \frac{sb^3}{3}x\right) dx$$

$$= 2\rho \left[\frac{sx^4}{4}b + \frac{sb^3x^2}{6}\right]_0^l$$

$$= 2\rho \left[\frac{sl^4b}{4} + \frac{sb^3l^2}{6}\right]$$

$m = \rho b s l^2 \qquad s = \frac{h}{l}$

$$\boxed{(I_{z-z})_0 = m\left[\frac{l^2}{2} + \frac{w^2}{12}\right]}$$

MOMENT OF INERTIA ABOUT C.G.

$(I_{z-z})_0 = (I_{z-z})_{CG} + mr^2 \qquad r = \frac{2}{3}l^2$

$(I_{z-z})_{C.G.} = (I_{z-z})_0 - mr^2$

$$= m\left[\frac{l^2}{2} + \frac{w^2}{12}\right] - \frac{m4}{9}l^2$$

$$\boxed{(I_{z-z})_{C.G.} = \frac{m}{18}\left[l^2 + \frac{3}{2}w^2\right]}$$

APPENDIX T43-A

Figures T43-1 through 1.7

and

Notes for Computer Flow Charts

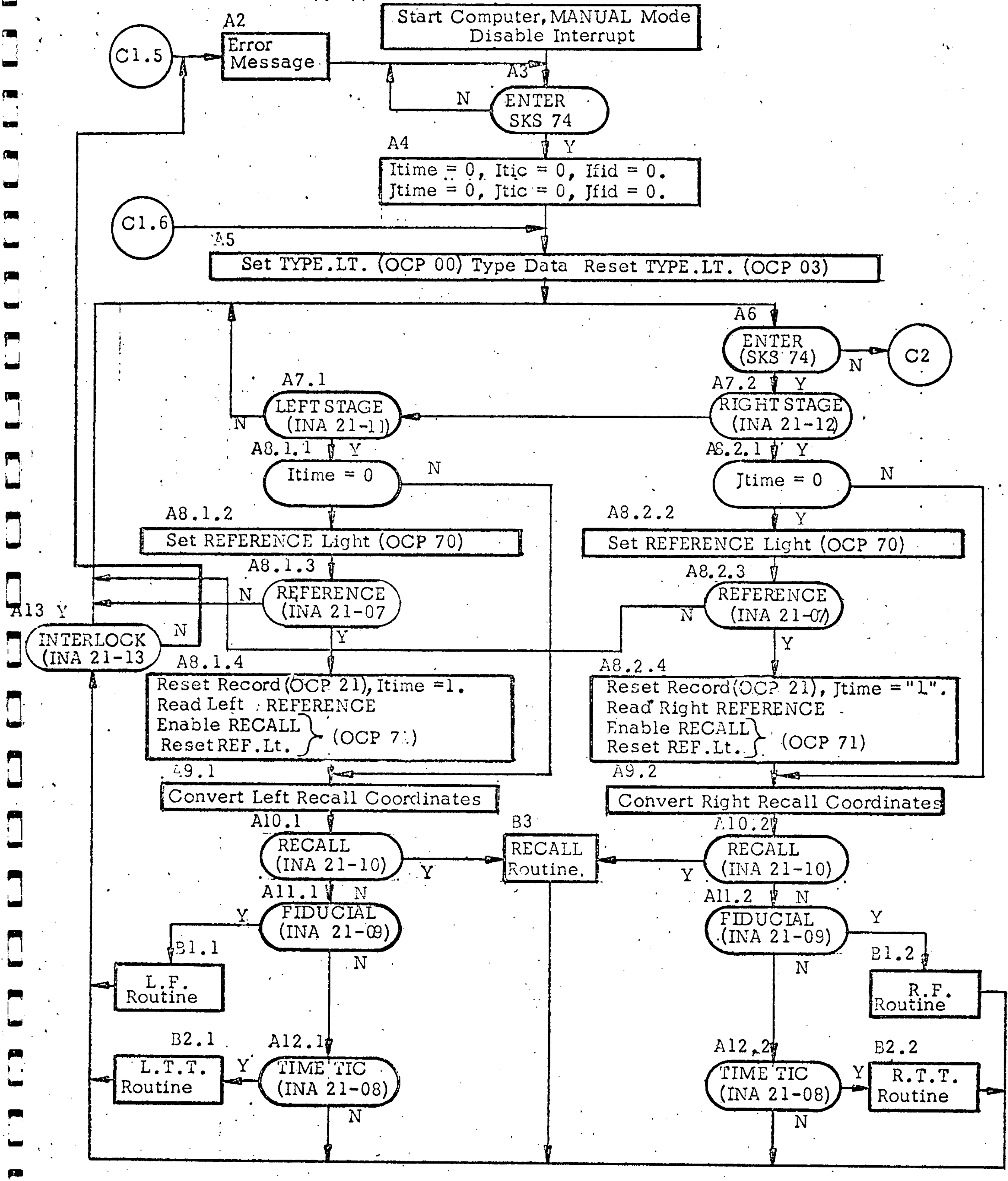

Figure T43-1.1

302-43
11/15/67

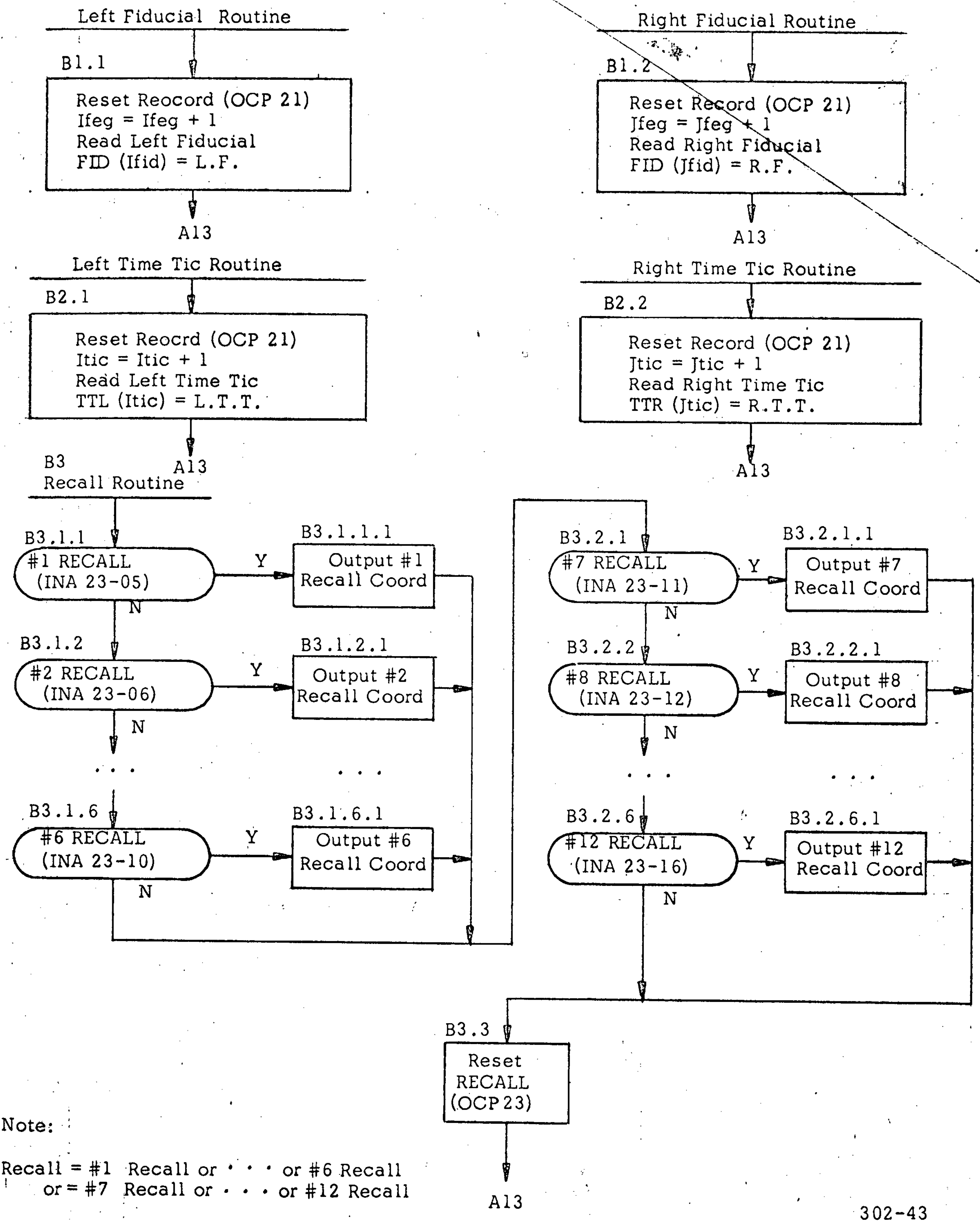

Note:

Recall = #1 Recall or • • • or #6 Recall
or = #7 Recall or • • • or #12 Recall

302-43
11/15/67

Figure T43-1.2

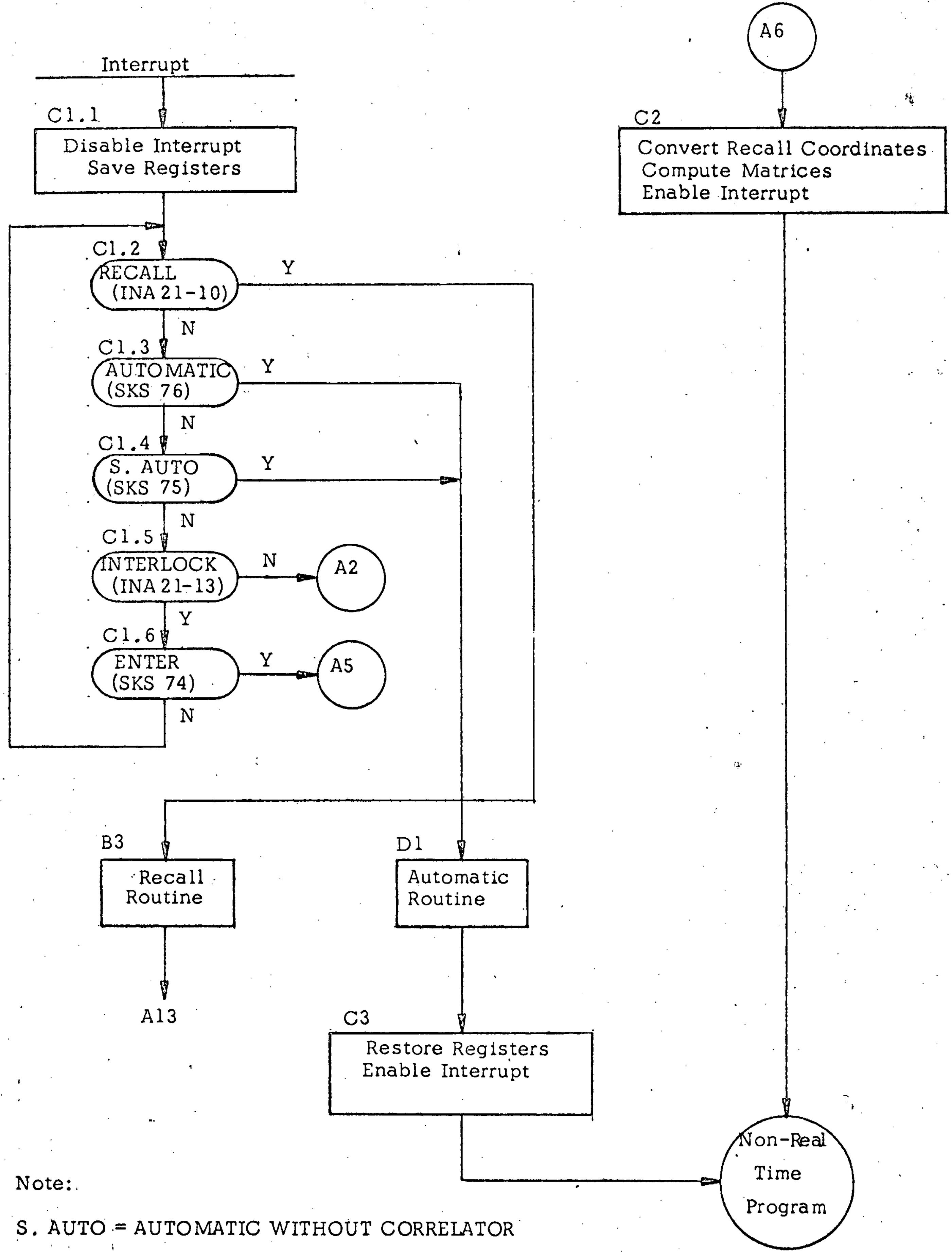

Note:

S. AUTO = AUTOMATIC WITHOUT CORRELATOR

302-43
11/15/67

Figure T43-1.3

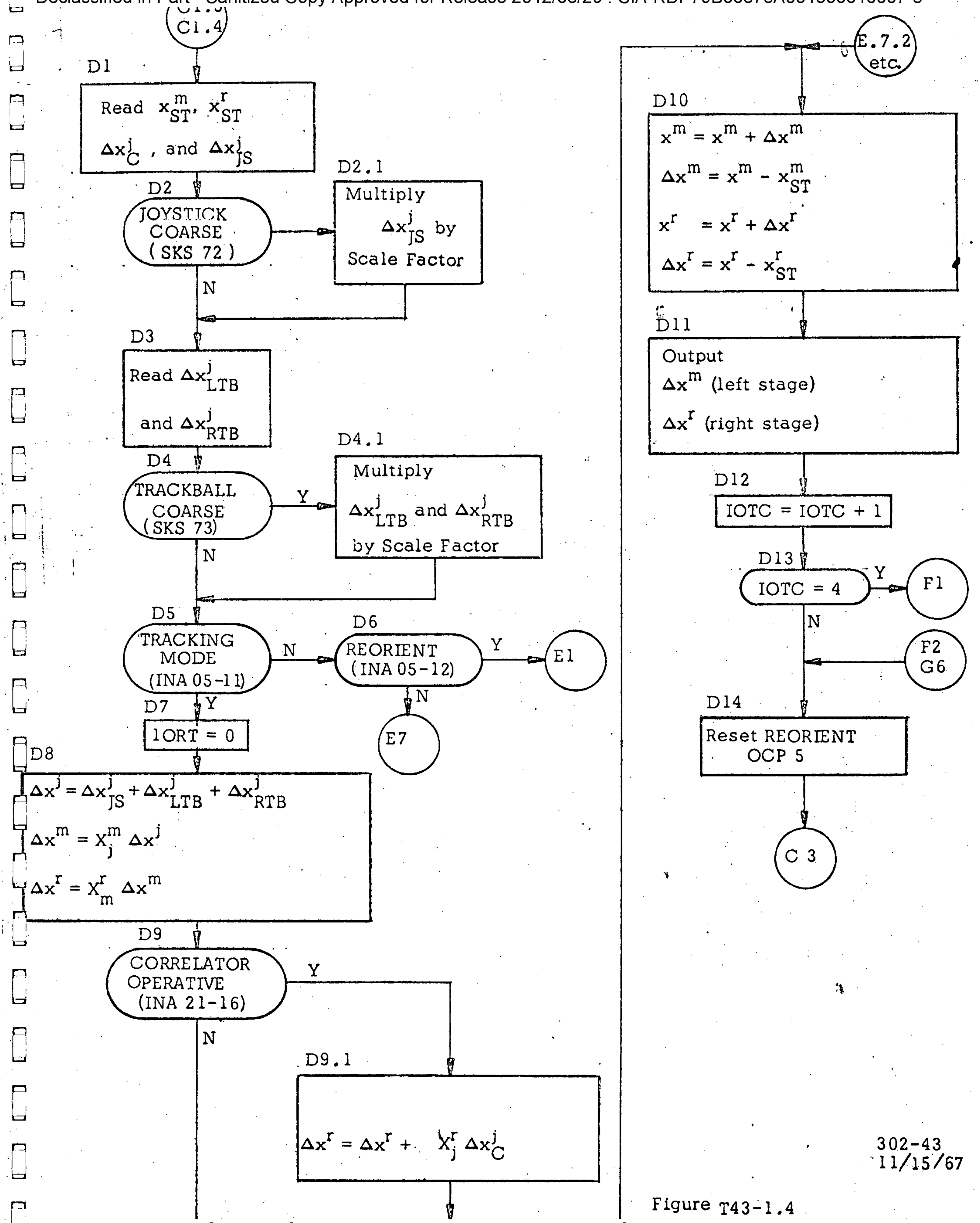

302-43
11/15/67

Figure T43-1.4

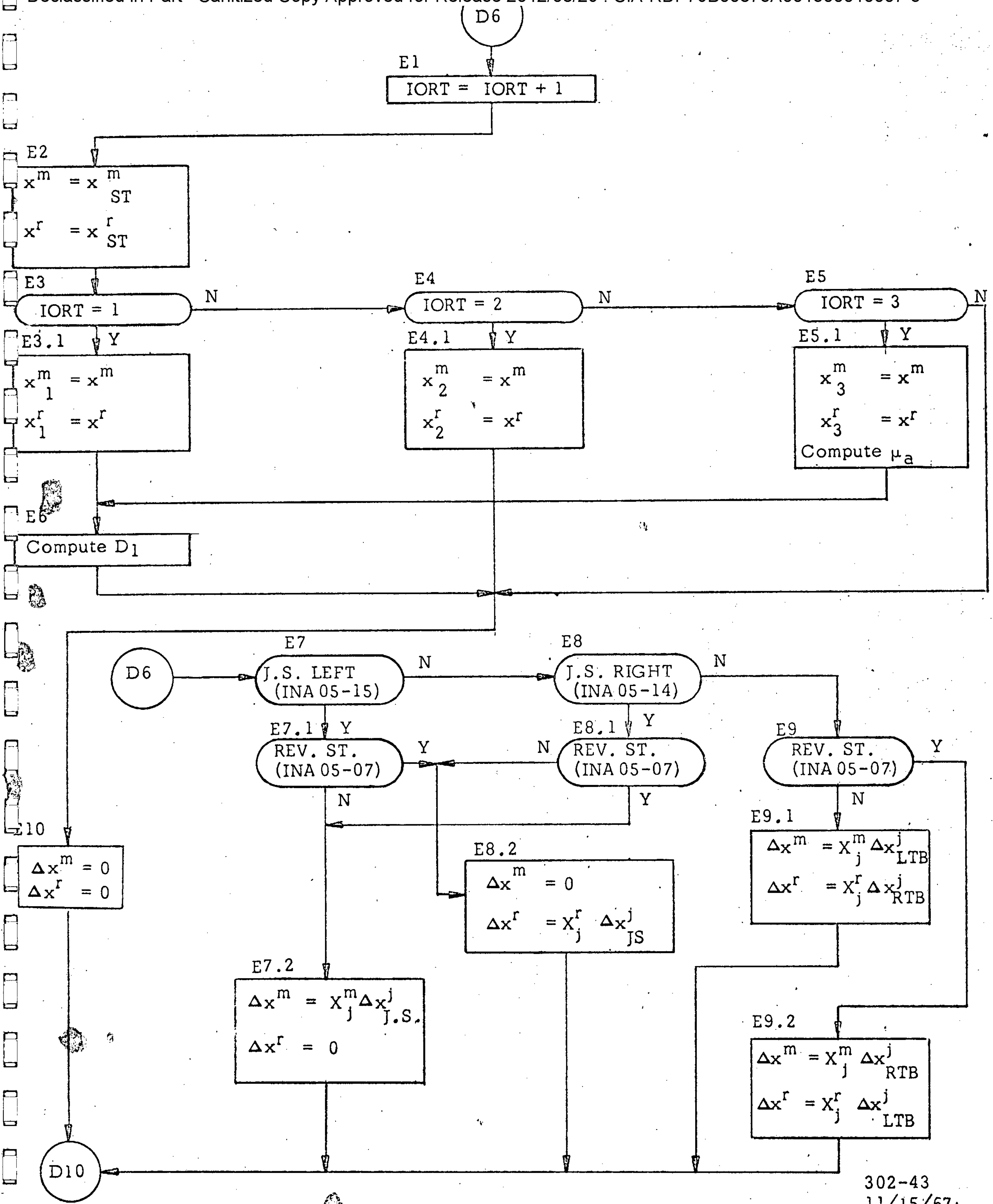

302-43
11/15/67

Figure T43-1.5

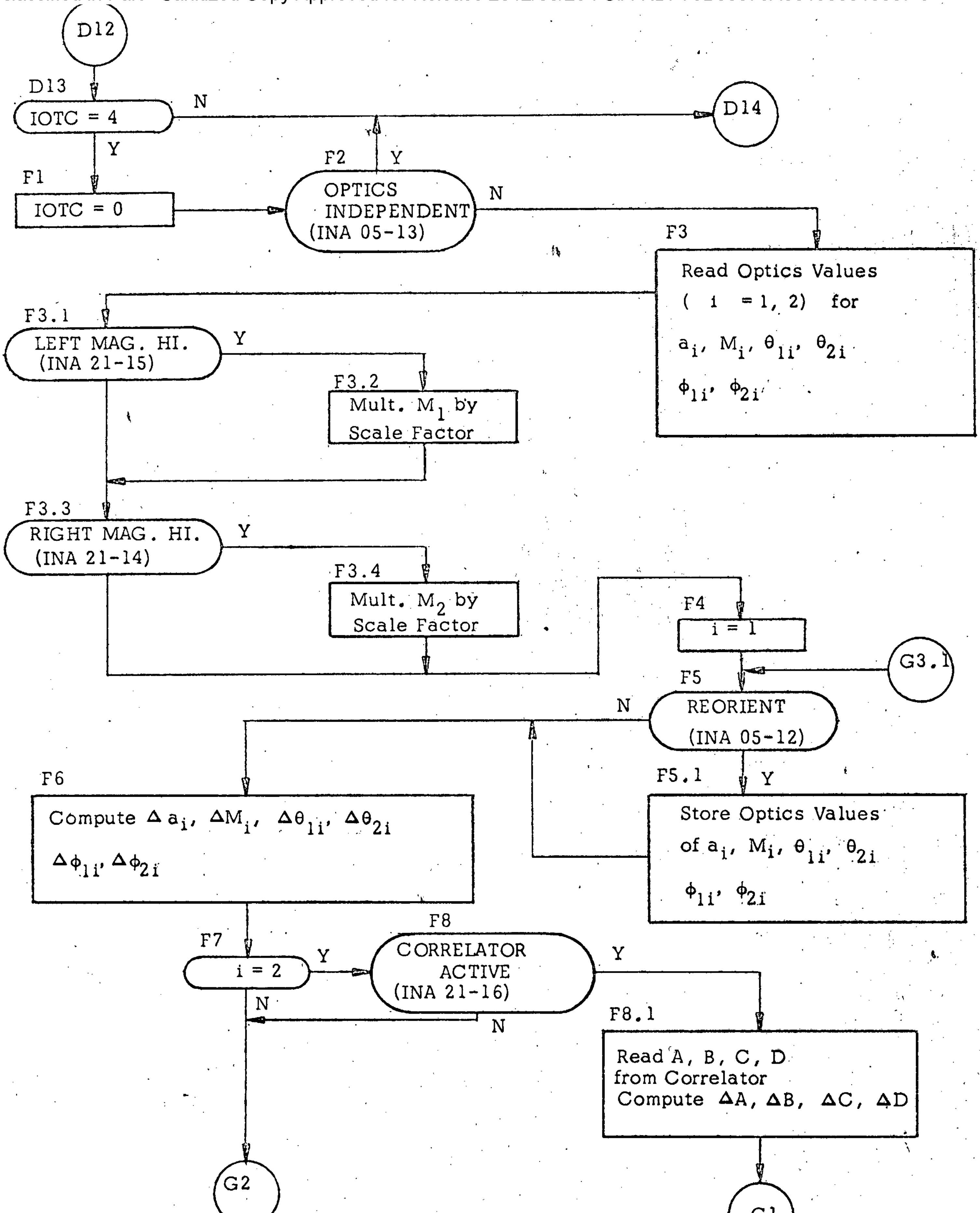

302-43
11/15/67

Figure T43-1.6

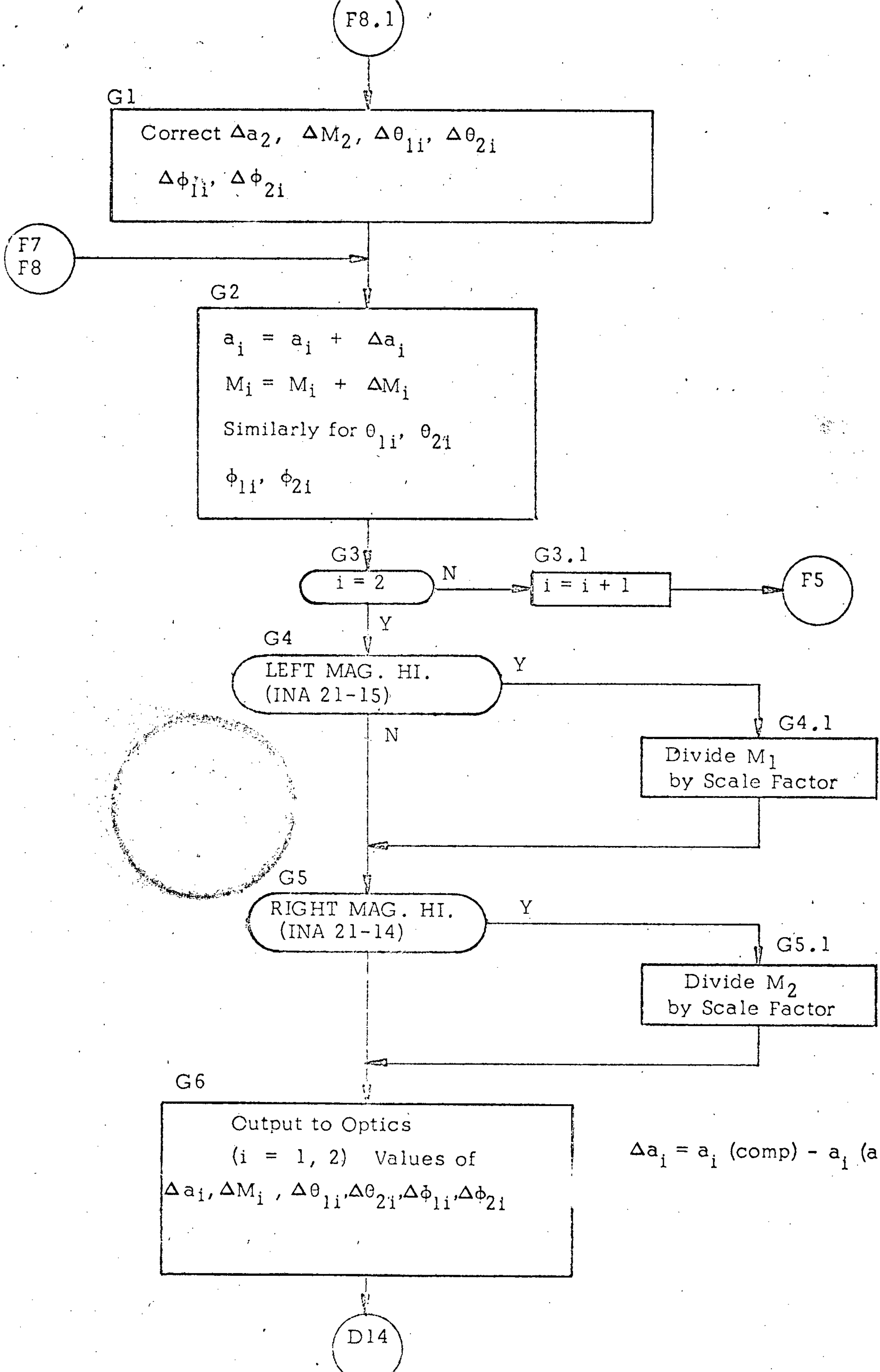

$\Delta a_i = a_i$ (comp) - a_i (actual) etc.

Figure T43-1.7

NOTES FOR COMPUTER FLOW CHARTS

D1 Read from Stereoscan registers:

a) x^m_{ST} = x, y coordinates of left stage.

b) x^r_{ST} = x, y coordinates of right stage.

c) Δx^j_{ST} = x, y image displacement indicated by correlator.

d) Δx^j_{JS} = x, y image displacement signalled by joystick.

D2 JOYSTICK COARSE:

Test condition of pushbutton on top of joystick handle: yes (skip) if button pushed. Tested by SKS 72.

D2.1 Multiply separately by appropriate scale factor:

$$\Delta x^j_{JS} = (\Delta x_{JS}, \Delta y_{JS})$$

D3 Read from Stereoscan registers:

a) Δx^j_{LTB} = x, y image displacement signalled by left trackball..

b) Δx^j_{RTB} = x, y image displacement signalled by right trackball..

D4 TRACKBALL COARSE:

Test condition of pushbutton with this title: yes (skip) if depressed. Tested by SKS 73.

D4.1 Multiply (separately) by appropriate scale factor:

$$\Delta x^j_{LTB} = (\Delta x_{LTB}, \Delta y_{LTB})$$

and

$$\Delta x^j_{RTB} = (\Delta x_{RTB}, \Delta y_{RTB})$$

D5 TRACKING MODE:

Test condition of flip flops which register this condition. Yes if INA 05 bit 11 is a "1".

D6 REORIENT:

Test pushbutton with this title. Yes if INA 05 bit 12 is a "1".

D7 IORT = 0:

Set to zero a memory word which is referred to by name "IORT".

D8 Computations per formulas given:

$\Delta x^j = (\Delta x, \Delta y)$ total image displacement signalled by stage controls.

$\Delta x^m = (\Delta x, \Delta y)$ displacement of left stage

$\Delta x^r = (\Delta x, \Delta y)$ displacement of right stage

X^m_j = inverse matrix (2 x 2) for left optics train

X^r_m = tracking matrix (2 x 2) for slave (right) stage displacement corresponding to master (left) stage displacement

(Note: notation $X^m_j \Delta x^j$ means

$X_{m1} \Delta x_1 + X_{m2} \Delta x_2$; m = 1, 2)

D9 CORRELATOR ACTIVE:

Test correlator signal for this condition. Yes if INA 21 bit 16 is a "1".

D9.1 Computations per formulas given:

X_j^r = inverse matrix (2 x 2) for right optics train

D10 Computations per formulas given:

x^m = x, y coordinates for left stage which computer uses in non-real time program

x^r = x, y coordinates for right stage sometimes computed by transformation in non-real time program, otherwise updated by incremental tracking - as in this box (D10).

D11 Output:

$\Delta x^m = \Delta x$, Δy increments to left stage count-down register

$\Delta x^r = \Delta x$, Δy increments to right stage count-down register

D12 Increment storage word which is referred to as "IOTC".

D13 Test to see if word "IOTC" is 4.

D14 Reset flip flop which is set by pushbutton marked REORIENT. OCP-5 results in reset.

E1 Increment storage word called "IORT".

E2 Store stage coordinates read in D1 at memory locations referred to in D10.

E3 Test word IORT for value 1.

E3.1 Store coordinates referred to in E2 at memory positions referred to as x_1^m and x_1^r (eight words of storage).

E4 Test word IORT for value 2.

E4.1 Store coordinates referred to in E2 at memory positions referred to as x_2^m and x_2^r (eight words of storage).

E5 Test word IORT for value 3.

E5.1 Store coordinates referred to in E2 at memory positions referred to as x_3^m and x_3^r (eight words of storage).

Compute μ_a = components of unit vector normal to plane through the 3 ground points represented by photograph points referred to in D3.1, D4.1, and D5.1, this plane is called the "Tracking Plane".

E6 Compute D_1 = the normal distance from the tracking plane to the #1 camera lens. $D_1 = \mu_a (x_1^a - x_{p1}^a)$

E7 JOYSTICK LEFT:

Test this pushbutton. Yes if INA 05 produces 1 at bit position 15.

E8 JOYSTICK RIGHT:

Test this pushbutton. Yes if INA 05 produces 1 at bit position 14.

E7.1, E8.1, E9 REVERSE STEREO:

Test for this optics condition. Yes if INA 05 produces 1 at bit position 07.

E7.2, E8.2, E9.1, E9.2 Compute per formulas given. Symbols are as defined in D1, D3, D8, and D9.1.

F1 Set word IOTC equal to zero.

F2 OPTICS INDEPENDENT:

Test this pushbutton. Yes if INA 05 bit 13 is a "1".

F3 Read settings of optical elements for both optics trains.

a_1, a_2 = anamorph stretch ratio for left and right optics.

M_1, M_2 = magnification for left and right optics.

θ_{11}, θ_{12}, θ_{21}, θ_{22} = angle of image rotator, left and right.

ϕ_{11}, ϕ_{12}, ϕ_{21}, ϕ_{22} = angle of anamorph major axis, left and right.

F3.1 LEFT MAGNIFICATION HIGH:

Test this pushbutton. Yes if INA 21 bit 15 is "1".

F3.2 Multiply M_1 by appropriate scale factor.

F3.3 RIGHT MAGNIFICATION HIGH:

Test this pushbutton. Yes if INA 21 bit 14 is "1".

F3.4 Multiply M_2 by appropriate scale factor.

F4 Set index to initial value.

F5 REORIENT:

Test this pushbutton. Yes if INA 05 bit 12 is "1".

F5.1 Store the values read in F3 for use in G2.

When these operations by-passed (F5 produces "no" answer) values used in G2 are those left from previous cycle.

F6 Compute increments:

$$\Delta a_i = \frac{\partial a_i}{\partial x_i} \Delta x_i + \frac{\partial a_i}{\partial y_i} \Delta y_i$$

$$\Delta M_i = \frac{\partial M_i}{\partial x_i} \Delta x_i + \frac{\partial M_i}{\partial y_i} \Delta y_i$$

etc.

F7 Test index for final value.

F8 CORRELATOR ACTIVE:

Test this signal from correlator. Yes if INA 21 bit 16 is "1".

F8.1 Read signals from correlator:

A = x scale factor

B = x skew

C = y skew

D = y scale factor

F8.1 (cont'd.)

Compute:

$$\begin{bmatrix} \Delta A & \Delta B \\ \Delta C & \Delta D \end{bmatrix} = \begin{bmatrix} A & B \\ C & D \end{bmatrix} \begin{bmatrix} A_2 & B_2 \\ C_2 & D_2 \end{bmatrix} - \begin{bmatrix} A_2 & B_2 \\ C_2 & D_2 \end{bmatrix} = \begin{bmatrix} (A-1) & B \\ C & (D-1) \end{bmatrix} \begin{bmatrix} A_2 & B_2 \\ C_2 & D_2 \end{bmatrix}$$

where A_2, B_2, C_2, D_2 = elements of X_r^j computed in non-real time program.

G1 Correct for effect of correlation signals:

$$\Delta a_2 = \Delta a_2 + \frac{\partial a_2}{\partial A_2} \Delta A + \frac{\partial a_2}{\partial B_2} \Delta B + \cdots$$

$$\Delta M_2 = \Delta M_2 + \frac{\partial M_2}{\partial A_2} \Delta A + \frac{\partial M_2}{\partial B_2} \Delta B + \cdots$$

etc.

G2 Compute per formulas given.

G3 Test index for final value.

G.3.1 Increment index.

G4 See F3.1.

G4.1 Divide M_1 by scale factor used in F3.2.

G5 See F3.3.

G5.1 Divide M_2 by scale factor used in F3.4.

G6 Output to both optical trains:

Values computed in G2.

APPENDIX T43-B

NON-REAL TIME COMPUTATIONS

[redacted] STAT

11/10/67
302-43

NON-REAL TIME COMPUTATIONS

1. TRACKING WHEN CAMERA STATION DATA AVAILABLE

1.1 Insofar as it is available the following information will be typed into the computer. For each camera station:

1.1.1 Type of photograph (frame, strip or panoramic).

1.1.2 Time at which exposure occurred or initiated.

1.1.3 Latitude, longitude, and altitude at time stated per 1.1.2.

1.1.4 Ground speed and angular heading with respect to north at time stated.

1.1.5 Angles of pitch, roll, and yaw with respect to vertical and stated heading at time stated.

1.1.6 Angles of semi-convergence and/or obliquity of camera.

1.1.7 Information regarding origin and spacing of time tics which camera put along edge of film during progressive exposure of photograph (not applicable for frame type photographs). Subsequent measurement of any time tic will enable computation of time at which a narrow strip across the photograph through that particular time tic was exposed.

1.1.8 The focal length of the camera, and angle β for a strip camera.

1.1.9 Information, as required, regarding fiducial marks, panoramic sweep rate, and image motion compensation (IMC) rate for camera during exposure.

1.2 Photograph coordinate systems.

For each photograph a right handed rectangular (Cartesian) coordinate system is assumed with its z-axis normal to the plane of the photograph and with its x-axis in the direction which was parallel to the flight direction at the time of exposure. The latter is, in general, approximately parallel to the edge of the film for strip photographs, perpendicular to the edge of the film for panoramic photographs, and parallel to some edge for frame photographs. The actual flight direction (x-axis) is established by measurement of fiducial marks which should be specified in 1.1.9. Order of measuring these marks will determine positive directions of x and y-axes.

1.2.1 Stage coordinate systems.

Both measuring stages have their positive x-axes from left to right across the short axes, and their y-axes from front to back across the long axes. Roll film is placed on the stages with its edge approximately parallel to the long axis. Cut film (i.e., cut duplicates of selected portions of roll film) is placed as though still part of a roll. Thus strip photographs have their x-axes approximately parallel to the stage y-axes, whereas panoramic photographs have their x-axes approximately parallel to the stage x-axes. No general rule is presently known for alignment of frame photographs on the measuring stages.

1.2.2 Rotation of coordinates.

Fiducial marks lined up with a photograph coordinate axis as specified under 1.1.9 are measured in stage coordinates. The direction of the specified axis is then computed by

$$\psi = \tan^{-1}\left(\frac{y_2 - y_1}{x_2 - x_1}\right)$$

where (x_1, y_1) and (x_2, y_2) are the stage coordinates of two fiducial marks. The rotation matrix for each stage will be designated

$$C_m^a = \begin{bmatrix} \cos\psi_1 & \sin\psi_1 & 0 \\ -\sin\psi_1 & \cos\psi_1 & 0 \\ 0 & 0 & 1 \end{bmatrix}$$

for the left stage, and

$$C_r^\sigma = \begin{bmatrix} \cos\psi_2 & \sin\psi_2 & 0 \\ -\sin\psi_2 & \cos\psi_2 & 0 \\ 0 & 0 & 1 \end{bmatrix}$$

for the right stage. The above formulae assume that the two fiducial marks define a photograph x-axis (positive direction). If the fiducials define a y-axis (positive direction) then the angle ψ calculated from the stated inverse tangent should be replaced by $(\psi - \pi/2)$ in the expression for C_m^a or C_r^σ.

1..2.3 The time tics referred to in 1.1.7 will (if not missing) be approximately lined up along the long axis of the measuring engine. As required, these time tics will have their x, y (stage) coordinates measured, and the results rotated into photograph coordinates. Rotation is to the x-axis for strip type photographs and to the y-axis for panoramic type photographs.

Thus the time at which any measured point was exposed is to be computed by interpolation between the times for the two nearest measured time tics as determined from their respective long-axis coordinates. In the case of panoramic photographs lacking a complete set of time tics there will be one or more fiducial marks which, together with the information specified in 1.1.9, can serve the same purpose.

1.2.4 The photograph coordinate systems have their origins fixed with respect to the photographs. For strip and panoramic photographs this fact means that the camera point of perspective is <u>not</u> constant with respect to the coordinate system. Hence the coordinates of the point of perspective are, in general, time functions. It will be assumed that the lens (point of perspective) coordinates can be satisfactorily approximated by the types of formulas given below:

1.2.4.1 Frame type photographs.

Lens coordinates constant:

$$(x_0,\ y_0,\ -f)$$

where f is the camera focal length.

1.2.4.2 Strip type photographs.

Lens x-coordinate a linear function of time. Lens y and z coordinates constant:

$$(x_0 + v\,(t - t_0),\ y_0,\ -f)$$

where v is the IMC velocity (taken as a negative number), t is the time referred to in 1.2.3, $(x_0,\ y_0,\ -f)$ are the (constant) lens coordinates at time t_0.

1.2.4.3 Panoramic type photographs.

IMC velocity is proportional to the cosine of the lens sweep angle. The latter is a linear function of time. The lens x-coordinate therefore involves an integral of a cosine function (i.e., a sine function). The lens y and z coordinates are constant:

$$(x_0 + \frac{v_M}{\omega} \sin \frac{y - y_0}{f}, y_0, - f)$$

where $(-v_M)$ is the maximum IMC velocity and ω is the lens angular sweep rate (see 1.1.9). In this expression difference between the time referred to in 1.2.3 and t_0 has been set equal to

$$(y - y_0)/\omega f.$$

1.3 Definition of corresponding points.

In general, for each point in one picture, there is a corresponding point in the other picture. Corresponding points are points, one on each photograph, which both correspond to the same ground point. Insofar as both pictures are complete one-to-one mappings of the ground surface there is likewise a unique one-to-one relation between corresponding points in the two photographs. It may happen, however, that certain low altitude regions of the ground are obscured by higher altitude ground regions from one photograph, but not from the other. Thus it is not true that every point in one photograph has a (visible) corresponding point in the other photograph. In other words, if each photograph is regarded as a mapping of the other photograph then one or the other will sometimes be like a folded mapping wherein a portion is folded under (i.e., obscured by) another portion. Thus the relation of correspondence between the two photographs is, mathematically speaking, sometimes a multivalued function.

1.4 Stage tracking.

As a result of some of the computations described below, and as a result of certain control functions which the computer can exercise on the two measuring stages, the latter will, if in the tracking mode, be approximately maintained on corresponding points. Thus the operator directs the "master" stage to a desired point and the computer directs the "slave" stage to the corresponding point. If tracking errors creep in and the operator desires to correct such tracking errors then he may use an independent (i.e., non-tracking) mode of stage control to place the stages precisely on corresponding points. Such exact correspondence is signalled to the computer by the operator depressing the REORIENT pushbutton. Details of this operation will be described later. Thus, in general, any time the computer reads the x-y coordinates of both stages it will thus obtain the two sets of coordinates belonging to points which are, at least approximately, corresponding to each other.

1.5 Corresponding times for the two camera stations.

For each camera station the time at which any particular point was exposed is related to the point as described in 1.2.3. Corresponding times for the two camera stations are the two exposure times for any two points which correspond to each other as described in 1.3.

1.6 Camera station ground coordinates.

Using information as per 1.1.3 and 1.2.3 the latitude, longitude, and altitude of both camera stations are to be computed at various required values of corresponding times for the two stations. Linear functions of time will be satisfactory approximations for this purpose. In what follows the following symbols will be used:

ϕ_1 = latitude at time t_1 of first (i.e., earliest) camera station, ($-\pi/2 \overline{<} \phi_1 \overline{<} +\pi/2$) north latitude taken positive.

λ_1 = longitude at time t_1 of first station, ($-\pi \overline{<} \lambda_1 \overline{<} +\pi$) east longitude taken positive.

ϕ_2, λ_2 = latitude and longitude at time t_2 of second camera station

ϕ_{10}, λ_{10} = values of ϕ_1 and λ_1 (at time t_{10}) stated per 1.1.3

ϕ_{20}, λ_{20} = values of ϕ_2 and λ_2 (at time t_{20}) stated per 1.1.3

V_1, V_2 = ground speeds of two camera stations

γ_1, γ_2 = headings (azimuth) with respect to north of two camera stations ($-\pi \leq \gamma \leq +\pi$) westerly heading taken positive.

H_1, H_2 = altitudes of two camera stations (assumed constant unless other information given).

Two cases may be distinguished:

1.6.1 When both camera stations occur on the same flight (and have essentially equal values of ground speed and heading):

$$\phi_1 - \phi_{10} = [(\phi_{20} - \phi_{10})/(t_{20} - t_{10})]\,(t_1 - t_{10})$$

$$\phi_2 - \phi_{10} = [(\phi_{20} - \phi_{10})/(t_{20} - t_{10})]\,(t_2 - t_{10})$$

$$\lambda_1 - \lambda_{10} = [(\lambda_{20} - \lambda_{10})/(t_{20} - t_{10})]\,(t_1 - t_{10})$$

$$\lambda_2 - \lambda_{10} = [(\lambda_{20} - \lambda_{10})/(t_{20} - t_{10})]\,(t_2 - t_{10})$$

1.6.2 When the two camera stations occur on two different flights or when the values for latitude and longitude are not given with sufficient precision to show significant difference for the two stations.

$$\phi_1 - \phi_{10} = [V_1\ (t_1 - t_{10}) \cos \gamma_1]/R_1$$

$$\lambda_1 - \lambda_{10} = -[V_1\ (t_1 - t_{10}) \sin \gamma_1]/R_2$$

$$\phi_2 - \phi_{20} = [V_2\ (t_2 - t_{20}) \cos \gamma_2]/R_1$$

$$\lambda_2 - \lambda_{20} = -[V_2\ (t_2 - t_{20}) \sin \gamma_2]/R_2$$

where

$$R_1 = N\ (1 - e^2 \cos^2 \phi_{10}) + H_1$$

$$R_2 = (N + H_1) \cos \phi_{10}$$

N and e defined in Manual of Photogrammetry, pages 349 and 466.

1.6.3 Primary ground coordinate system.

Origin at ϕ_{10}, λ_{10}, H_1. X axis points north, Y axis points west, and Z axis points vertically up. No computations needed to establish this coordinate system.

1.6.4 Computation of air base (relative to system specified in 1.6.3).

ϕ_1, λ_1, ϕ_2, λ_2 computed for corresponding times at which air base is evaluated. Use formulas in 1.6.1 or 1.6.2. Then:

$$H = (H_1 + H_2)/2$$

$$X_2^a - X_1^a = (X_2 - X_1,\ Y_2 - Y_1,\ Z_2 - Z_1)$$

$$X_2 - X_1 = (R_1\ [\sin(\phi_2 - \phi_1)] + \frac{R_2}{2}\ (\lambda_2 - \lambda_1)^2 \sin \phi_{10}$$

$$Y_2 - Y_1 = -R_2 \sin(\lambda_2 - \lambda_1)\ [1 - (\phi_2 - \phi_1) \tan \phi_{10}]$$

$$Z_2 - Z_1 = -\frac{N + H}{2}\ [(\phi_2 - \phi_1)^2 + (\lambda_2 - \lambda_1)^2 \cos^2 \phi_{10}]$$

1.6.5 Rotation of ground coordinate system.

1.6.5.1 Rotate about Z axis by angle

$$\tan^{-1}[(Y_2 - Y_1)/(X_2 - X_1)]$$

counter-clockwise rotation (when looking down from above) if angle is positive.

1.6.5.2 Rotate about new Y axis by angle

$$\tan^{-1}[(Z_2 - Z_1)/\sqrt{(X_2 - X_1)^2 + (Y_2 - Y_1)^2}]$$

downward rotation if angle is negative (usual case).

1.6.5.3 Rotate about new X axis by an angle to be specified later (called the angle of obliquity).

1.6.5.4 The direction cosines of the combined effect of these three rotations will be represented by

$$C_a^j$$

1.7 Direction cosines for each camera station.

1.7.1 If both camera stations are on the same flight the angles of pitch, roll, and yaw are to be linearly interpolated similarly to the method shown for latitude and longitude in 1.6.1.

1.7.2 If the two camera stations are on different flights the angles of pitch, roll and yaw are to be taken constant for each camera station. By one of these two methods the angles of pitch, roll, and yaw are to be obtained at corresponding times for the two camera stations. Then for each station:

1.7.3 Rotate the photograph coordinate system abouts its z-axis by minus the angle of yaw.

1.7.4 Rotate about the new y-axis by minus the angle of pitch combined with semi-convergence.

1.7.5 Rotate about the new x-axis by minus the angle of roll combined with obliquity.

1.7.6 Rotate about the new z-axis by minus the angle of heading.

1.7.7 Rotate about the new y-axis by $-\phi_1$ for the first camera station and by $-\phi_2$ for the second station. Positive x-axis upward if latitude is positive.

1.7.8 Rotate about the new x-axis by $-(\lambda_1 - \lambda_{10})$ for the first station and by $-(\lambda_2 - \lambda_{10})$ for the second station. Positive y-axis downward if angle is negative.

1.7.9 Rotate about the new y-axis by ϕ_{10}. Positive x-axis downward if latitude is positive.

1.7.10 The direction cosines computed for the combined effect of all the above rotations will be represented by C_{α}^{a} for the first camera station, and C_{σ}^{a} for the second camera station.

1.7.11 Define $C^a_m = C^a_\alpha C^\alpha_m$ and $C^a_r = C^a_\sigma C^\sigma_r$ as well as inverses (transposes) of these (i.e., C^m_a and C^r_a).

1.8 Subroutine for computation of ground coordinates from measured photograph coordinates of corresponding points ($X^a_2 - X^a_1$ computed as in 1.6.4).

$$X^a - X^a_1 = \frac{C^a_\alpha \left[C^3_\sigma (X^1_2 - X^1_1) - C^1_\sigma (X^3_2 - X^3_1)\right] (x^\alpha - x^\alpha_1)\,(x^\sigma - x^\sigma_2)}{(C^1_\beta C^3_\tau - C^3_\beta C^1_\tau)\,(x^\beta - x^\beta_1)\,(x^\tau - x^\tau_2)}$$

This subroutine calls the appropriate subroutines for evaluating

$$x^\alpha - x^\alpha_1 \text{ and } x^\sigma - x^\sigma_2$$

depending on which type (or types) of photographs are being measured. (See 1.12.)

1.9 Subroutine for computation of unit vector which is normal to tracking plane through three ground points. Let X^a_{p1}, X^a_{p2}, and X^a_{p3} be the (X, Y, Z) coordinates of three ground points which are not all colinear (computed per 1.8). Then

1.9.1 $U_a = \epsilon_{abc} (X^b_{p2} - X^b_{p1}) (X^c_{p3} - X^c_{p1})$

1.9.2 $U = (\delta^{ab} U_a U_b)^{\frac{1}{2}}$

1.9.3 $\mu_a = U_a / U; \ \mu_\alpha = \mu_a C^a_\alpha$

1.9.4 μ_a are the ground system components (direction cosines) and μ_α are the photo system components of the desired unit vector.

1.10 Subroutine for computation of normal distance of first camera station from tracking plane.

$$D_1 = \mu_a (X_1^a - X_{p1}^a)$$

X_1^a computed in 1.6.4; X_{p1}^a computed in 1.8; μ_a computed in 1.9.

1.11 Transformation from a point in the master stage photograph to the corresponding point in the slave stage photograph.

1.11.1 Auxiliary functions used in 1.11.2 - 1.11.6 (also see 1.12)

$$X^a - X_{20}^a = - \frac{D_1 C_\alpha^a (x^\alpha - X_1^\alpha)}{\mu_\beta (x^\beta - x_1^\beta)} - (X_{20}^a - X_1^a)$$

$$X_1^a = X_{10}^a + V_1^a (t_1 - t_{10}); X_2^a = X_{20}^a + V_2^a (t_2 - t_{20}); \text{ approx.}$$

But see 1.6.4.

t_1 per 1.2.3 (for master stage photograph). t_2 given below.

$$Y_\alpha^\sigma = C_a^\sigma [C_\alpha^a + \frac{\mu_\alpha}{D_1} (X_2^a - X_1^a)]$$

1.11.2 Frame type slave stage photograph.

$$x^\sigma - x_{20}^\sigma = \frac{f_2 Y_\alpha^\sigma (x^\alpha - x_1^\alpha)}{Y_\beta^{3''} (x^\beta - x_1^\beta)}; \quad \sigma = 1, 2$$

x_{20}^σ constant

$t_2 = t_{20}$

1.11.3 Strip type slave stage photograph.

$$x^{\sigma} - x_2^{\sigma} = \frac{f_2 Y_{\alpha}^{\sigma} (x^{\alpha} - x_1^{\alpha})}{Y_{\beta}^{3''} (x^{\beta} - x_1^{\beta})}; \quad \sigma = 1,\ 2$$

$$x_2^{\sigma} = x_{20}^{\sigma} + \delta_{1''}^{\sigma} v_2 (t_2 - t_{20})$$

$$t_2 = \frac{(C_a^{1''} - C_a^{3''} \tan \beta_2)(X^a - X_{20}^a)}{(C_b^{1''} - C_b^{3''} \tan \beta_2) V_2^b} + t_{20}$$

$$v_2 = - \frac{[C_a^{1''} f_2 - C_a^{3''} f_2 \tan \beta_2] V_2^a (\mu_{1''} \tan \beta_2 + \mu_{3''})}{D_2}$$

1.11.4 Panoramic type slave stage photograph.

$$\alpha_2 = \tan^{-1} \frac{Y_{\alpha}^{2''} (x^{\alpha} - x_1^{\alpha})}{Y_{\beta}^{3''} (x^{\beta} - x_1^{\beta})}$$

$$t_2 - t_{20} = \alpha_2 / \omega_2$$

$$x^{\sigma} - x_2^{\sigma} = f_2 \cos \alpha_2 \frac{Y_{\alpha}^{\sigma} (x^{\alpha} - x_1^{\alpha})}{Y_{\beta}^{3''} (x^{\beta} - x_1^{\beta})}; \quad \sigma = 1$$

$$y_2 - y_{20} = f_2 \alpha_2$$

1.11.5 Output to slave stage. Coordinates rotated by

$$x^r - x_{20}^r = C_{\sigma}^r (x^{\sigma} - x_{20}^{\sigma}).$$

1.11.6 Tracking matrix.

By using the transformation formula 1.11.3 or 1.11.4 for three nearby points, values are obtained for two corresponding displacements on the two photographs (Δx_1^a, Δx_1^σ, and Δx_2^a, Δx_2^σ) wherein $\Delta x^{3'}$ and $\Delta x^{3''}$ are zero. These are related by

$$\Delta x_1^\sigma = X_a^\sigma \, \Delta x_1^a$$

and

$$\Delta x_2^\sigma = X_a^\sigma \, \Delta x_2^a$$

which may be solved for the matrix X_a^σ. The tracking matrix is then given by:

$$X_m^r = X_a^\sigma \, C_\sigma^r \, C_m^a .$$

1.12 Subroutines for evaluation of $x^a - x_1^a$.

Where measured, coordinates are assumed rotated into photograph system, i.e., $x^a - x_{10}^a = C_m^a \, (x^m - x_{10}^m)$.

1.12.1 Frame photography.

$$x^a - x_1^a = (x^{1'} - x_{10}^{1'}, \; x^{2'} - x_{10}^{2'}, \; f_1)$$

$x_{10}^{1'}$, $x_{10}^{2'}$ constant

1.12.2 Strip photography.

$$x^a - x_1^a = (f_1 \tan \beta_1, \; x^{2'} - x_{10}^{2'}, \; f_1)$$

$$(t_1 - t_{10}) \cong \frac{x^{1'} - x_{10}^{1'} - f_1 \tan \beta_1}{v}$$ (but see 1.2.3

1.12.3 Panoramic photography.

$$x^a - x_1^a = \left(x^{1'} - x_{10}^{1'} - \frac{v_M}{\omega} \sin \frac{y - y_{10}}{f_1}, \; f_1 \sin \frac{y - y_{10}}{f_1}, \; f_1 \cos \frac{y - y_{10}}{f_1}\right)$$

1.12.4 Paragraph 1.8 also calls for evaluation of $x^{\sigma} - x_2^{\sigma}$. This quantity for the number 2 photograph is analogous to $x^{a} - x_1^{a}$ for the number 1 photograph. 1.12.1, 1.12.2, and 1.12.3 may be adapted for $x^{\sigma} - x_2^{\sigma}$ simply by appropriate changes of the indices.

2. COMPUTER CONTROL OF OPTICAL TRAINS

A frame type virtual image equivalent to the number one photograph may be computed by the formula

$$x^j - x^j_{10} = \frac{f\, C^j_\alpha\, (x^\alpha - x^\alpha_1)}{C^{3*}_\beta\, (x^\beta - x^\beta_1)} - \frac{f\, (C^j_a\, C^{3*}_b - C^{3*}_a\, C^j_b)\, C^b_\alpha\, (x^\alpha - x^\alpha_1)\, V^a_1\, t_1}{\dfrac{D_1}{\mu_\gamma\, (x^\gamma - x^\gamma_1)}\, [C^{3*}_\beta\, (x^\beta - x^\beta_1)]^2}$$

Similarly a frame type image equivalent to the number two photograph may be computed by the formula

$$x^j - x^j_{20} = \frac{f\, C^j_\sigma\, (x^\sigma - x^\sigma_2)}{C^{3*}_\tau\, (x^\tau - x^\tau_2)} - \frac{f\, (C^j_a\, C^{3*}_b - C^{3*}_a\, C^j_b)\, C^b_\sigma\, (x^\sigma - x^\sigma_2)\, V^a_2\, t_2}{\dfrac{D_2}{\mu_v\, (x^v - x^v_2)}\, [C^{3*}_\tau\, (x^\tau - x^\tau_2)]^2}$$

Such computations are not directly required; the formulas are given to help define what follows. Since both equations have the same form, differing only in the letters used for indices the following description is given for only one photograph. The formulas given apply also for the second photograph (except for the difference in indices). Thus the same set of formulas will be evaluated twice, once for each optical train.

2.1 Optics transformation matrix

$$X^j_\alpha = \frac{\partial x^j}{\partial\, (x^\beta - x^\beta_1)}\ \frac{\partial\, (x^\beta - x^\beta_1}{\partial x^\alpha} + \frac{\partial x^j}{\partial t}\, \frac{\partial t}{\partial x^\alpha}$$

$$X^j_m = X^j_\alpha\, C^\alpha_m$$

2.2 Computation of terms in 2.1.

2.2.1 Frame type photograph.

$$\frac{\partial x^j}{\partial (x^\beta - x_1^\beta)} = \frac{f\,(C_\beta^j\, C_\gamma^{3*} - C_\beta^{3*}\, C_\gamma^j)\ (x^\gamma - x_1^\gamma)}{[C_\delta^{3*}\ (x^\delta - x_1^\delta)]^2}$$

$$\frac{\partial (x^\beta - x_1^\beta)}{\partial x^a} = \delta_a^\beta$$

$$\frac{\partial t}{\partial x^a} = 0$$

2.2.2 Strip type photograph.

$$\frac{\partial x^j}{\partial (x^\beta - x_1^\beta)} = \frac{f\,(C_\beta^j\, C_\gamma^{3*} - C_\gamma^{3*}\ C_\gamma^j)\ (x^\gamma - x_1^\gamma)}{[C_\delta^{3*}\ (x^\delta - x_1^\delta)]^2}$$

$$\frac{\partial (x^\beta - x_1^\beta)}{\partial x^a} = \delta_{2'}^\beta\ \delta_a^{2'}$$

$$\frac{\partial t}{\partial x^a} = \frac{1}{v}\ \delta_a^{1'} \quad v = v_M$$

2.2.3 Panoramic type photograph.

$$\frac{\partial x^j}{\partial (x^\beta - x_1^\beta)} = \frac{f\,(C_\beta^j\, C_\gamma^{3*} - C_\beta^{3*}\, C_\gamma^j)\ (x^\gamma - x_1^\gamma)}{[C_\delta^{3*}\ (x^\delta - x_1^\delta)]^2}$$

$$\frac{\partial (x^\beta - x_1^\beta)}{\partial x^a} = \delta_{1'}^\beta\ \delta_a^{1'}$$

$$- [\delta_{1'}^\beta\ \frac{v_M}{\omega f_1} \cos \frac{y - y_{10}}{f_1} - \delta_{2'}^\beta \cos \frac{y - y_{10}}{f_1} + \delta_{3'}^\beta \sin \frac{y - y_{10}}{f_1}]\ \delta_a^{2'}$$

$$\frac{\partial t}{\partial x^a} = \frac{1}{\omega f_1}\ \delta_a^{2'}$$

$$\tan \beta_1 = 0$$

2.2.4 Strip and panoramic.

$$v_M = - \frac{[C_a^{1'} f_1 - C_a^{3'} f_1 \tan \beta_1] V_1^a (\mu_{1'} \tan \beta_1 + \mu_{3'})}{D_1}$$

$$V_1^a = (V_1 \cos \gamma_1, V_1 \sin \gamma_1, 0)$$

$$\mu_\alpha = (\mu_{1'}, \mu_{2'}, \mu_{3'}) = C_\alpha^a \mu_a$$

2.3 Derivatives of Optics Transformation Matrices.

Let the elements of the matrices for the two optics trains be

$$X_m^j = \begin{bmatrix} A_1 & B_1 \\ C_1 & D_1 \end{bmatrix}$$

and

$$X_r^j = \begin{bmatrix} A_2 & B_2 \\ C_2 & D_2 \end{bmatrix} .$$

Compute values for these elements at three nearby pairs of corresponding points. From these compute increment approximations for the derivatives

$$\frac{\delta X_m^j}{\delta x^n}$$

and

$$\frac{\delta X_r^j}{\delta x^s}$$

where each index takes two values (one for x and one for y).

2.4 Computation of settings for optical elements.

2.4.1 Let the elements of the optical transformation matrix be

$$X_m^j = \begin{bmatrix} A & B \\ C & D \end{bmatrix}$$

2.4.2 Anamorphic stretch ratio.

$$a = \frac{A^2 + B^2 + C^2 + D^2 + \sqrt{[(A - D)^2 + (B + C)^2][(A + D)^2 + (C - B)^2]}}{2\ (AD - BC)}$$

2.4.3 Magnification of zoom lens.

$$M = \sqrt{\frac{AD - BC}{a}}$$

2.4.4 Image rotator angles

$$\theta_1 = \tan^{-1}\left(\frac{C - B}{A + D}\right); \quad -\pi \leq \theta_1 \leq \pi$$

$$\theta_2 = \theta_1 + \pi \text{ if } \theta_1 < 0$$

$$\theta_2 = \theta_1 - \pi \text{ if } \theta_1 > 0$$

2.4.5 Auxiliary angle

$$\theta_3 = \tan^{-1} \frac{B + C}{A - D}; \quad -\pi \leq \theta_3 \leq \pi$$

2.4.6 Anamorphic Angles

$$\Delta_1 = \frac{1}{2}(\theta_3 - \theta_1); \quad -\pi \leq \Delta_1 \leq \pi$$

$$\Delta_2 = \Delta_1 + \pi \text{ if } \Delta_1 < 0$$

$$\Delta_2 = \Delta_1 - \pi \text{ if } \Delta_1 > 0$$

2.4.7 From the formulae in 2.4.2 to 2.4.6 compute the derivatives:

$$\frac{\partial a}{\partial A}, \frac{\partial a}{\partial B}, \frac{\partial a}{\partial C}, \frac{\partial a}{\partial D}$$

$$\frac{\partial M}{\partial A}, \quad \ldots$$

$$\frac{\partial \theta_1}{\partial A}, \quad \ldots$$

$$\frac{\partial \Delta_1}{\partial A}, \quad \ldots$$

In computing the above derivatives it will sometimes be useful to employ the following rules for differentiating ratios of functions.

(a) If $F(x) = F_1(x)/F_2(x)$

then $F'(x) = [F(x)/F_1(x)]\, F_1'(x) - [F(x)/F_2(x)]\, F_2'(x)$

(b) If $F(x) = \sqrt{F_1(x)}/F_2(x)$

then $F'(x) = [F(x)/2F_1(x)]\, F_1'(x) - [F(x)/F_2(x)]\, F_2'(x)$

2.4.8 Combine the results of 2.3 and 2.4.7 to obtain

$$\frac{\partial a}{\partial x} = \frac{\partial a}{\partial A}\frac{\partial A}{\partial x} + \frac{\partial a}{\partial B}\frac{\partial B}{\partial x} + \ldots$$

$$\frac{\partial a}{\partial y} = \frac{\partial a}{\partial A}\frac{\partial A}{\partial y} + \frac{\partial a}{\partial B}\frac{\partial B}{\partial y} + \ldots$$

$$\frac{\partial M}{\partial x} = \frac{\partial M}{\partial A}\frac{\partial A}{\partial x} + \ldots$$

etc.

Both for the left optics train and for the right optics train.